PRODUCT BRIEF

CoolSET™ 5th Generation Quasi-resonant Plus

in DSO-12 Package

The ICE5QRxx80BG-1 is the CoolSET™ 5th generation Quasi-Resonant Plus of integrated power IC optimized for off-line switch power supply in cascode configuration. It is housed in single package with 2 separate chips: one is controller chip and other is HV MOSFET chips. The IC can achieve lower EMI and higher efficiency with improved digital frequency reduction through the proprietary novel Quasi-Resonant operation. The Active Burst Mode enables flexibility in standby power range selection. The product has a wide operation range (10 ~ 32V) of IC power supply and lower power consumption. The numerous protection functions including the robust line protection (both input OVP and brownout) to support the protections of the power supply system in failure situations. All of these make the CoolSET™ 5th generation Plus series an outstanding integrated power device in Quasi-Resonant flyback converter in the market.

Overview of features and improvements

- Enhanced reliability performances
  - Higher robustness through design parameters improvements
  - Add-on protections features vs previous families
- High performance
  - Digital frequency reduction for higher system efficiency
  - Integrated P7 CoolMOS™ high voltage super junction MOSFET for optimal thermal performances
- High power delivery
  - Highest power delivery without heatsink in the market with standard DSO-12 package up to 42 W (85 ~ 300 V_{AC})
- Ease of design
  - Flexibility for disabling BI/BO, LOVP or both
  - Tightened Gate rise time spread for consistent EMI

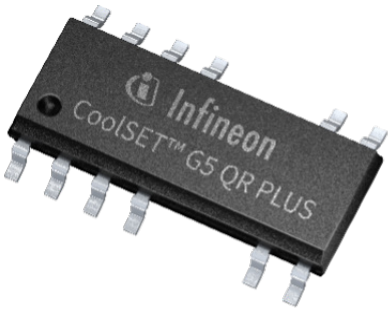

Key features

- Integrated 800 V avalanche rugged CoolMOS™
- Active Burst Mode with selectable entry and exit standby power
- Digital frequency reduction for higher system efficiency
- Minimum switching frequency difference between low & high line for higher system efficiency & low EMI
- Increased pin voltage rating for higher robustness and ease of system design
- Selectable over temperature protection threshold
- Selectable VIN Protection (BI/BO and LOVP) combination
- Pin to Pin with its previous Gen-5 family

Key benefits

- BOM count and cost reduction with highly integrated protection features, integrated avalanche capable high voltage MOSFET
- High V_{CC} max. voltage rating (35 V) and $V_{IN/FB}$ max. voltage rating (5.5 V) improve robustness
- Innovative system protections prevent damage to controller and main switch under abnormal pin operating condition
- Wide integrated portfolio offering in DSO-12 packages up to 77 W for high design reusability and fast time-to-market

Consumer | AUX power | Washing machine | Aircon | Fridge | Server

PRODUCT BRIEF

CoolSET™ 5th Generation Quasi-resonant Plus

in DSO-12 Package

Typical application in isolated flyback using TL431 and optocoupler

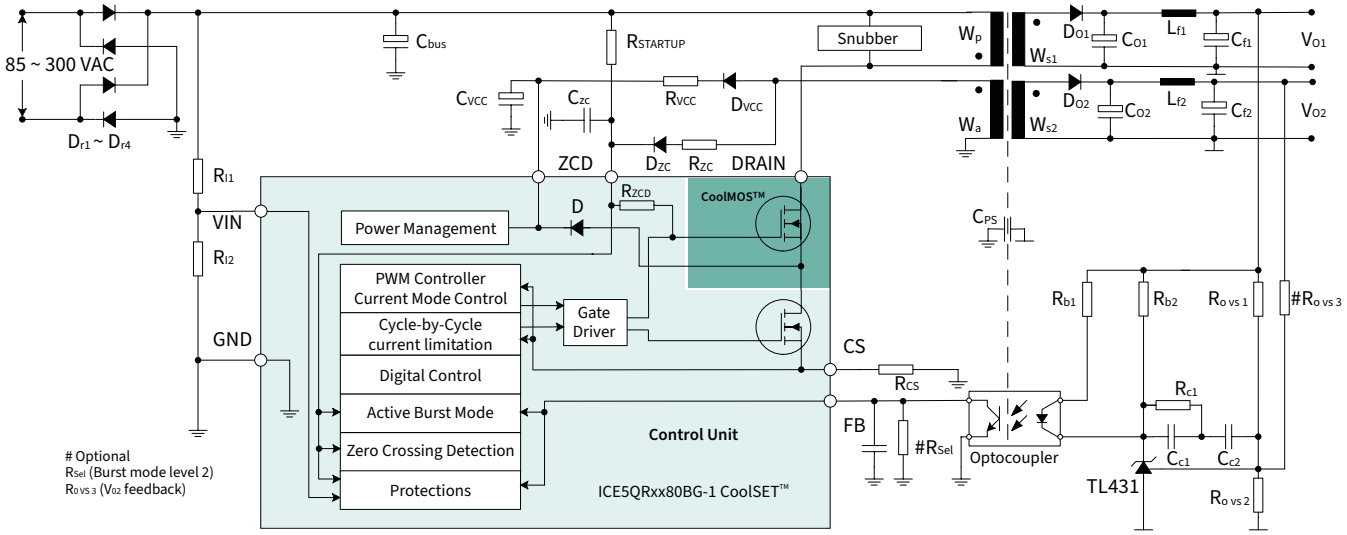

Output power of CoolSET™ 5th Generation Quasi-Resonant Plus in flyback design

Type	Package	Marking	V_{DS}	$R_{DS(on)}$	220 V_{AC} ± 20%	85-300 V_{AC}
ICE5QR4780BG-1	PG-DSO-12	5QR4780BG-1	800 V	4.13	28 W	15 W
ICEQR2280BG-1	PG-DSO-12	5QR2280BG-1	800 V	2.13	42 W	23 W
ICE5QR1680BG-1	PG-DSO-12	5QR1680BG-1	800 V	1.53	50 W	27 W
ICE5QR0680BG-1	PG-DSO-12	5QR0680BG-1	800 V	0.71	77 W	42 W

Published by
Infineon Technologies Austria AG
9500 Villach
Austria

© 2024 Infineon Technologies AG.
All rights reserved.

Public

Date: 10/2024

Please note!
This Document is for information purposes only and any information given herein shall in no event be regarded as a warranty, guarantee or description of any functionality, conditions and/or quality of our products or any suitability for a particular purpose. With regard to the technical specifications of our products, we kindly ask you to refer to the relevant product data sheets provided by us. Our customers and their technical departments are required to evaluate the suitability of our products for the intended application.

We reserve the right to change this document and/or the information given herein at any time.

Additional information
For further information on technologies, our products, the application of our products, delivery terms and conditions and/or prices, please contact your nearest Infineon Technologies office (www.infineon.com).

Warnings
Due to technical requirements, our products may contain dangerous substances. For information on the types in ques-tion, please contact your nearest Infineon Technologies office.

Except as otherwise explicitly approved by us in a written document signed by authorized representatives of Infineon Technologies, our products may not be used in any life-endangering applications, including but not limited to medical, nuclear, military, life-critical or any other applications where a failure of the product or any consequences of the use thereof can result in personal injury.

Scan QR code and explore offering
www.infineon.com