PRODUCT BRIEF

BDP1CG15NB-01

Radiation tolerant plastic-packaged, single channel low-side gate driver

Infineon IR HiRel's BDP1CG15NB-01 is a fast, single-channel, radiation-tolerant gate driver optimized for low-side switching applications. With a maximum supply voltage of 20 V, the IC has enough headroom to maximize its current drive, making it highly effective for switching large MOSFETs. Its rail-to-rail output stage utilizes complementary MOSFETs to deliver robust drive currents of 4 A sourcing and 8 A sinking. By employing a P-channel sourcing transistor, the design eliminates source-follower voltage drops, ensuring true rail-to-rail behavior and maintaining exceptionally low output impedance, typically below 0.85 Ω for sourcing and 0.35 Ω for sinking.

Engineered for high-speed switching applications, the BDP1CG15NB-01 minimizes signal propagation delays and rise/fall times to reduce MOSFET switching losses. All inputs are LV-TTL compatible and feature a supply-independent hysteresis of approximately 1.1 V. To prevent unintended turn-on events during power-up or when inputs are left unconnected, the non-inverting input is internally pulled low while the inverting input is pulled high. The integrated undervoltage lockout (UVLO) circuit further enhances control reliability by enforcing a typical 8 V threshold with hysteresis. This ensures the driver only enables high-level output switching when the supply voltage is sufficient to fully saturate the MOSFET, thereby preventing inefficient linear-mode operation and excessive power dissipation.

Protection features include shoot-through prevention and current limiting. The asymmetrical output enables "brake before make"(BBM) for half-bridges. During startup, shutdown, or UVLO events, the output is actively held low, ensuring defined safe states. This makes the device ideal for reliable, radiation-hardened power systems requiring efficient, robust MOSFET control.



BDP1CG15NB-01

Key features

Product features

- 8 A sink driving capability
- 20 ns propagation delay
- 8 V / 7 V UVLO on/off
- Single Event Effect (SEE) tolerant up to Linear Energy Transfer (LET) = 45 MeV•cm²/mg
- Total Ionisation Dose (TID) tolerant up to 30 kRad(Si)

Target applications

- Power distribution
- Battery management systems
- DC-DC converters
- Low voltage drives

Product validation

- Qualified for space applications according to the relevant tests of JEDEC
- TID irradiation according to ESCC 22900 standard
- RoHS compliant
- Lead free
- Halogen free

New space

Constellations

www.infineon.com/newspace

PRODUCT BRIEF

BDP1CG15NB-01

Radiation tolerant plastic-packaged, single channel low-side gate drive

Space power architecture

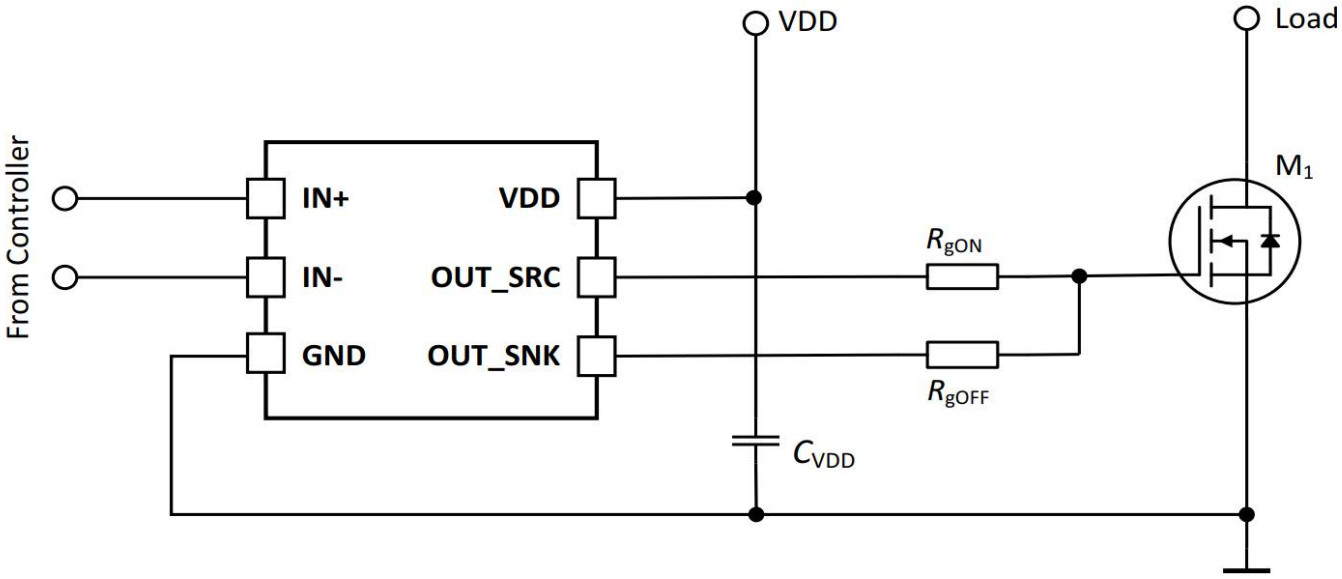

Product table

Product name	Package	Voltage class (V)	Output current (source / sink) (A)	Channels	Config	Isolation	Switch type	V_{BS} UVLO on/off (V)	TID max (kRad(Si)
BDP1CG15NB-01	PG-SOT23-6	20	4 / 8	1	Low-side	Non-isolated	MOSFET (SJ,NL)	8 / 7	30

Published by
Infineon Technologies AG
Am Campeon 1-15, 85579 Neubiberg
Germany

© 2026 Infineon Technologies AG.
All rights reserved.

Public

Date: 5/2026

Please note!
This Document is for information purposes only and any information given herein shall in no event be regarded as a warranty, guarantee or description of any functionality, conditions and/or quality of our products or any suitability for a particular purpose. With regard to the technical specifications of our products, we kindly ask you to refer to the relevant product data sheets provided by us. Our customers and their technical departments are required to evaluate the suitability of our products for the intended application.

We reserve the right to change this document and/or the information given herein at any time.

Additional information
For further information on technologies, our products, the application of our products, delivery terms and conditions and/or prices, please contact your nearest Infineon Technologies office (www.infineon.com).

Warnings
Due to technical requirements, our products may contain dangerous substances. For information on the types in question, please contact your nearest Infineon Technologies office.

Infineon Technologies Components may only be used in life-support devices or systems with the expressed written approval of Infineon Technologies, if a failure of such components can reasonably be expected to cause the failure of that life-support device or system, or to affect the safety of effectiveness of that device or system.

Life support devices or systems are intended to be implanted in the human body, or to support and/or maintain and sustain and/or protect human life. If they fail, it is reasonable to assume that the health of the user or other persons may be endangered.

Scan QR code and explore offering
www.infineon.com/hirel