XDPP1140, XDPP1148, and XDPP1188 PMBus® commands set

About this document

Scope and purpose

This document describes all the PMBus® commands supported by the XDPP1140, XDPP1148, and XDPP1188 digital power supply controller.

Intended audience

This document is intended for XDPP1140, XDPP1148, and XDPP1188 users.

About this product group

Target applications

- Isolated/ non-isolated DC-DC converters
- Intermediate bus converters for datacenter/computing system
- Power supplies for telecom infrastructure/brick modules
- Smart power systems for Industrial applications

Product family

XDP™ digital power controllers

Table of contents

About this document **1**
About this product group **1**
Table of contents **2**
1 PMBus® commands–standard **6**
1.1 00h – PAGE 6
1.2 01h – OPERATION 6
1.3 02h – ON_OFF_CONFIG 6
1.4 03h – CLEAR_FAULTS 7
1.5 10h – WRITE_PROTECT 7
1.6 11h – STORE_DEFAULT_ALL 8
1.7 12h – RESTORE_DEFAULT_ALL 8
1.8 15h – STORE_USER_ALL 8
1.9 16h – RESTORE_USER_ALL 9
1.10 17h – STORE_USER_CODE 9
1.11 18h – RESTORE_USER_CODE 9
1.12 19h – CAPABILITY 9
1.13 1Bh – SMBALERT_MASK 9
1.14 20h – VOUT_MODE 10
1.15 21h – VOUT_COMMAND 11
1.16 22h – VOUT_TRIM 11
1.17 23h – VOUT_CAL_OFFSET 11
1.18 24h – VOUT_MAX 12
1.19 25h – VOUT_MARGIN_HIGH 12
1.20 26h – VOUT_MARGIN_LOW 12
1.21 27h – VOUT_TRANSITION_RATE 12
1.22 28h – VOUT_DROOP 13
1.23 29h – VOUT_SCALE_LOOP 13
1.24 2Bh – VOUT_MIN 13
1.25 32h – MAX_DUTY 14
1.26 33h – FREQUENCY_SWITCH 14
1.27 34h – POWER_MODE 14
1.28 35h – VIN_ON 15
1.29 36h – VIN_OFF 15
1.30 37h – INTERLEAVE 15
1.31 39h – IOUT_CAL_OFFSET 15
1.32 3Ah – FAN_CONFIG_1_2 16
1.33 3Bh – FAN_COMMAND_1 16
1.34 40h – VOUT_OV_FAULT_LIMIT 16
1.35 41h – VOUT_OV_FAULT_RESPONSE 17
1.36 42h – VOUT_OV_WARN_LIMIT 17
1.37 43h – VOUT_UV_WARN_LIMIT 18
1.38 44h – VOUT_UV_FAULT_LIMIT 18
1.39 45h – VOUT_UV_FAULT_RESPONSE 18
1.40 46h – IOUT_OC_FAULT_LIMIT 18
1.41 47h – IOUT_OC_FAULT_RESPONSE 19
1.42 48h – IOUT_OC_LV_FAULT_LIMIT 19
1.43 49h - IOUT_OC_LV_FAULT_RESPONSE 19

Table of contents

1.44 4Ah – IOUT_OC_WARN_LIMIT 20
1.45 4Bh – IOUT_UC_FAULT_LIMIT 20
1.46 4Ch – IOUT_UC_FAULT_RESPONSE 21
1.47 4Fh – OT_FAULT_LIMIT 21
1.48 50h – OT_FAULT_RESPONSE 21
1.49 51h – OT_WARN_LIMIT 22
1.50 52h – UT_WARN_LIMIT 22
1.51 53h – UT_FAULT_LIMIT 23
1.52 54h – UT_FAULT_RESPONSE 23
1.53 55h – VIN_OV_FAULT_LIMIT 23
1.54 56h – VIN_OV_FAULT_RESPONSE 24
1.55 57h – VIN_OV_WARN_LIMIT 24
1.56 58h – VIN_UV_WARN_LIMIT 24
1.57 59h – VIN_UV_FAULT_LIMIT 25
1.58 5Ah – VIN_UV_FAULT_RESPONSE 25
1.59 5Bh – IIN_OC_FAULT_LIMIT 25
1.60 5Ch – IIN_OC_FAULT_RESPONSE 26
1.61 5Dh – IIN_OC_WARN_LIMIT 26
1.62 5Eh – POWER_GOOD_ON 27
1.63 5Fh – POWER_GOOD_OFF 27
1.64 60h – TON_DELAY 27
1.65 61h – TON_RISE 27
1.66 62h – TON_MAX_FAULT_LIMIT 27
1.67 63h – TON_MAX_FAULT_RESPONSE 29
1.68 64h – TOFF_DELAY 29
1.69 65h – TOFF_FALL 29
1.70 66h – TOFF_MAX_WARN_LIMIT 30
1.71 6Ah – POUT_OP_WARN_LIMIT 30
1.72 6Bh – PIN_OP_WARN_LIMIT 30
1.73 78h – STATUS_BYTE 30
1.74 79h – STATUS_WORD 31
1.75 7Ah – STATUS_VOUT 32
1.76 7Bh – STATUS_IOUT 32
1.77 7Ch – STATUS_INPUT 33
1.78 7Dh – STATUS_TEMPERATURE 33
1.79 7Eh – STATUS_CML 34
1.80 7Fh – STATUS_OTHER 34
1.81 80h – STATUS_MFR_SPECIFIC 35
1.82 81h – STATUS_FANS_1_2 35
1.83 88h – READ_VIN 35
1.84 89h – READ_IIN 36
1.85 8Bh – READ_VOUT 36
1.86 8Ch – READ_IOUT 36
1.87 8Dh – READ_TEMPERATURE_1 36
1.88 8Eh – READ_TEMPERATURE_2 37
1.89 90h – READ_FAN_SPEED_1 37
1.90 94h – READ_DUTY_CYCLE 37
1.91 95h – READ_FREQUENCY 37
1.92 97h – READ_PIN 38
1.93 98h – PMBUS_REVISION 38

Table of contents

1.94 99h – MFR_ID 38
1.95 9Ah – MFR_MODEL 39
1.96 9Bh – MFR_REVISION 39
1.97 9Ch – MFR_LOCATION 39
1.98 9Dh – MFR_DATE 39
1.99 9Eh – MFR_SERIAL 39
1.100 A0h – MFR_VIN_MIN 40
1.101 A1h – MFR_VIN_MAX 40
1.102 A2h – MFR_IIN_MAX 40
1.103 A3h – MFR_PIN_MAX 40
1.104 A4h – MFR_VOUT_MIN 40
1.105 A5h – MFR_VOUT_MAX 41
1.106 A6h – MFR_IOUT_MAX 41
1.107 A7h – MFR_POUT_MAX 41
1.108 A8h – MFR_TAMBIENT_MAX 41
1.109 ADh – IC_DEVICE_ID 41
1.110 AEh – IC_DEVICE_REV 42
1.111 B0h – USER_DATA_00 42

2 PMBus® commands – non-standard 43

2.1 C4h FW_CONFIG_PWM 43
2.2 C5h FW_CONFIG_REGULATION 43
2.3 C6h FW_CONFIG_TELEMETRY 44
2.4 C7h MFR_FREQUENCY_DITHER 45
2.5 CAh MFR_IOUT_OC_FAST_FAULT_RESPONSE 46
2.6 CCh MFR_BOARD_TRIM 46
2.7 CDh MFR_VRECT_SCALE 47
2.8 CEh MFR_AHB_ADDRESS 47
2.9 CFh PWM_DEADTIME 47
2.10 D0h MFR_PHASE1_INTERLEAVE 49
2.11 D1h MFR_IOUT_OC_FAST_FAULT_LIMIT 49
2.12 D2h MFR_PHASE1_IOUT_CAL_OFFSET 49
2.13 D3h MFR_PHASE1_IOUT_APC 50
2.14 D4h MFR_FW_CONFIG_UART 50
2.15 D5h MFR_SS_RAMP_FSW 50
2.16 D6h PWM_DEADTIME_ADJUSTMENT 51
2.17 D7h MFR_COMMON_FAULT_STATUS2 51
2.18 D8h FREQUENCY_SWITCH2 52
2.19 D9h INTERLEAVE2 52
2.20 DAh MFR_ISHARE_THRESHOLD 52
2.21 DCh MFR_SELECT_TEMPERATURE_SENSOR 52
2.22 DEh MFR_REG_WRITE 53
2.23 DFh MFR_REG_READ 53
2.24 E4h FW_CONFIG_DEADTIME_ADJUSMENT_THRESHOLD 53
2.25 E5h MFR_TRANSFORMER_SCALE 54
2.26 E8h MFR_COMMON_FAULT_STATUS1 54
2.27 EAh MFR_IOUT_APC 54
2.28 EBh MFR_MIN_PW 54
2.29 EDh MFR_SCP_FAULT_RESPONSE 55
2.30 F0h MFR_DEBUG_BUFF 55
2.31 F1h MFR_SETUP_PASSWORD 56

Table of contents

2.32 F2h MFR_DISABLE_SECURITY_ONCE 56
2.33 F4h MFR_SECURITY_BIT_MASK_LOW 56
2.34 F5h MFR_SECURITY_BIT_MASK_HIGH 57
2.35 FCh MFR_ADDED_DROOP_DURING_RAMP 57
2.36 FDh MFR_FIRMWARE_COMMAND_DATA 57
2.37 FEh MFR_FIRMWARE_COMMAND 64
2.38 Firmware patched command 64
3 Reserved and pre-assigned address 65
4 Numerical format 66
4.1 Definition of numerical formats 66
4.2 Linear11 format 66
4.3 PMBus® format options 66
5 Related resources 68
Revision history 69
Disclaimer 70

1 PMBus® commands–standard

1.1 00h – PAGE

The PAGE command provides the ability to configure, control, and monitor through only one physical address either:

- multiple outputs on one unit, or
- multiple non-PMBus® devices through a PMBus® device to non-PMBus® device adapter or bridge

Table 1 PAGE

Command code	Command name	Write Tx	Read Tx	Bytes	Valid data
00h	PAGE	Write byte	Read byte	1	0x00, 0xFF

1.2 01h – OPERATION

The OPERATION command is used to configure the operational state of the converter, in conjunction with input from the CONTROL (EN) pin. The OPERATION command is used to:

- Turn the PMBus® device output on and off with commands sent over the PMBus®
- Select the margin state of the device (margin off, margin high, margin low)
- Select whether fault conditions caused by margining are ignored or acted upon
- Select whether the output voltage is set by commands over the PMBus® or AVSBus
- Select whether the converter powers down immediately or follows the programmed TOFF_DELAY and TOFF_FALL commands when commanded to turn off the output

Table 2 OPERATION command data byte

7	6	5:4	3:2	1:0
On-/Off-state 0: Off 1: On	Turn-off behavior [7:6] 1x: Ignore 00: Immediate off 01: Soft off	Voltage command source 00: VOUT_COMMAND 01: VOUT_MARGIN_LOW 10: VOUT_MARGIN_HIGH	Margin fault response 01: Ignore margin fault 10: Act on margin fault	Reserved

Table 3 OPERATION

Command code	Command name	Write Tx	Read Tx	Bytes	Valid data
01h	OPERATION	Write byte	Read byte	1	0x00, 0x40, 0x80, 0x82, 0x94, 0x98, 0xA4, 0xA8

1.3 02h – ON_OFF_CONFIG

The ON_OFF_CONFIG command configures the combination of CONTROL pin input and serial bus commands needed to turn the unit on and off. This includes how the unit responds when power is applied.

Table 4 ON_OFF_CONFIG command data byte

Bit number	Purpose	Value and meaning
[7:5]		Reserved
4	Sets the default to either operate any time power is present or for the on/off to be controlled by CONTROL pin and serial bus commands	0: Unit powers up any time power is present regardless of state of the CONTROL pin 1: Unit does not power up until commanded by the CONTROL pin and OPERATION command (as programmed in bits [3:0])
3	Controls how the unit responds to commands received via the serial bus	0: Ignore the ON/OFF portion bit [7] of OPERATION command 1: To start, the unit requires that the ON/OFF portion of the OPERATION command is instructing the unit to run
2	Controls how the unit responds to the CONTROL pin	0: Unit ignores the CONTROL pin (on/off controlled only the OPERATION command) 1: Unit requires the CONTROL pin to be asserted to start the unit
1	Polarity of the CONTROL pin	0: Active low 1: Active high
0	CONTROL pin action when commanding the unit to turn off	0: Soft turn-off, use the programmed TOFF_DELAY and TOFF_FALL 1: Turn-off immediately (hard stop)

Table 5 ON_OFF_CONFIG

Command code	Command name	Write Tx	Read Tx	Bytes	Valid data
02h	ON_OFF_CONFIG	Write byte	Read byte	1	0x00 - 0x1F

1.4 03h – CLEAR_FAULTS

The CLEAR_FAULTS command is used to clear any fault bits that have been set. This command clears all bits in all status registers simultaneously. At the same time, the device negates (clears, releases) its SMBALERT# signal output if the device is asserting the SMBALERT# signal.

Table 6 CLEAR_FAULTS

Command code	Command name	Write Tx	Read Tx	Bytes
03h	CLEAR_FAULTS	Send byte		0

1.5 10h – WRITE_PROTECT

The WRITE_PROTECT command is used to control writing to the PMBus® device. The intention of this command is to provide protection against accidental changes. This command is not intended to provide protection against deliberate or malicious changes to a device's configuration or operation.

Table 7 WRITE_PROTECT command data byte

Data byte value	Meaning
0x00	Enable writes to all commands
0x03	Disable all writes. Once locked it needs power recycle to reset.
0x20	Disable all writes except to the WRITE_PROTECT, OPERATION, PAGE, ON_OFF_CONFIG and VOUT_COMMAND commands
0x40	Disable all writes except to the WRITE_PROTECT, OPERATION and PAGE commands
0x80	Disable all writes except to the WRITE_PROTECT command

Table 8 WRITE_PROTECT

Command code	Command name	Write Tx	Read Tx	Bytes	Valid data
10h	WRITE_PROTECT	Write byte	Read byte	1	0x00, 0x03, 0x20, 0x40, 0x80

1.6 11h – STORE_DEFAULT_ALL

The STORE_DEFAULT_ALL command instructs the PMBus® device to copy the entire contents of the operating memory to the matching locations in the non-volatile default store memory. Any items in operating memory that do not have matching locations in the default store are ignored.

Table 9 STORE_DEFAULT_ALL

Command code	Command name	Write Tx	Read Tx	Bytes
11h	STORE_DEFAULT_ALL	Send byte	–	0

1.7 12h – RESTORE_DEFAULT_ALL

The RESTORE_DEFAULT_ALL command instructs the PMBus® device to copy the entire contents of the non-volatile default store memory to the matching locations in the operating memory. The values in the operating memory are overwritten by the value retrieved from the default store. Any items in the default store that do not have matching locations in the operating memory are ignored.

Table 10 RESTORE_DEFAULT_ALL

Command code	Command name	Write Tx	Read Tx	Bytes
12h	RESTORE_DEFAULT_ALL	Send byte	–	0

1.8 15h – STORE_USER_ALL

The STORE_USER_ALL command instructs the PMBus® device to copy the entire contents of the operating memory to the matching locations in the non-volatile user store memory. Any items in operating memory that do not have matching locations in the user store are ignored.

Table 11 STORE_USER_ALL

Command code	Command name	Write Tx	Read Tx	Bytes
15h	STORE_USER_ALL	Send byte	–	0

1.9 16h – RESTORE_USER_ALL

The RESTORE_USER_ALL command instructs the PMBus® device to copy the entire contents of the non-volatile user store memory to the matching locations in the operating memory. The values in the operating memory are overwritten by the value retrieved from the user store. Any items in the user store that do not have matching locations in the operating memory are ignored.

Table 12 RESTORE_USER_ALL

Command code	Command name	Write Tx	Read Tx	Bytes
16h	RESTORE_USER_ALL	Send byte	–	0

1.10 17h – STORE_USER_CODE

The STORE_USER_CODE command instructs the PMBus® device to copy the parameter whose command code matches value in the data byte from the operating memory to the matching location in the non-volatile user store memory.

Table 13 STORE_USER_CODE

Command code	Command name	Write Tx	Read Tx	Bytes
17h	STORE_USER_CODE	Write byte	–	1

1.11 18h – RESTORE_USER_CODE

The RESTORE_USER_CODE command instructs the PMBus® device to copy the parameter whose command code matches the value in the data byte from the non-volatile user store memory to the matching location in the operating memory. The value of the operating memory is overwritten by the value retrieved from the user store.

Table 14 RESTORE_USER_CODE

Command code	Command name	Write Tx	Read Tx	Bytes
18h	RESTORE_USER_CODE	Write byte	–	1

1.12 19h – CAPABILITY

This command provides a way for a host system to determine some key capabilities of a PMBus® device. This is a read-only command.

Table 15 CAPABILITY

Command code	Command name	Write Tx	Read Tx	Bytes	Valid Data
19h	CAPABILITY	–	Read byte	1	0xD0

1.13 1Bh – SMBALERT_MASK

The SMBALERT_MASK command may be used to prevent a warning or fault condition from asserting the SMBALERT# signal.

Table 16 SMBALERT_MASK

Command code	Command name	Write Tx	Read Tx	Bytes	Valid Data
1Bh	SMBALERT_MASK	Write word	Block write/Block read proc. call	2	0x7A-0x81 for first data. (statusRegister) 0x00-0xFF for second data. (Mask)

1.14 20h – VOUT_MODE

The data byte for the VOUT_MODE command is one byte that consists of a three-bit mode and a 5-bit parameter, as shown in Figure 1. The three-bit mode sets whether the device uses the ULINEAR16, half-precision IEEE 754 floating point, VID, or DIRECT modes for output voltage-related commands. The XDPP1100 only supports ULINEAR16 mode, bit [7:5] = 000. The five-bit parameter N is a 5-bit two's complement binary integer and defines the exponent of the output voltage (Figure 2). For example, when VOUT_COMMAND = 0x17, the exponent is -9.

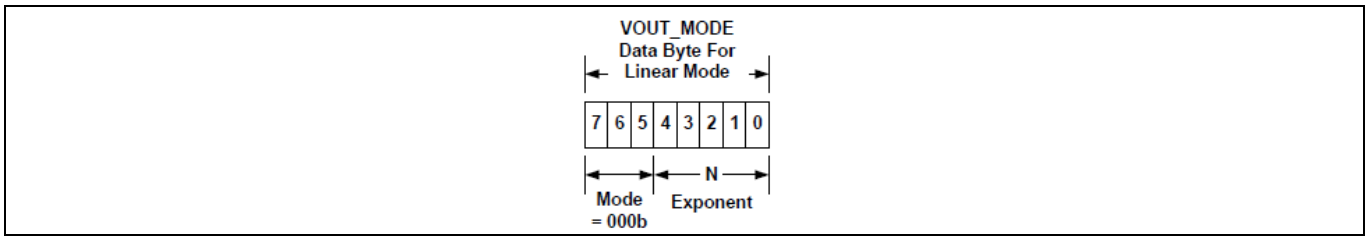

Figure 1 VOUT_MODE command data byte

The setting of VOUT_MODE determines the mode and exponent of the following commands:

- VOUT_COMMAND
- VOUT_TRIM
- VOUT_CAL_OFFSET
- VOUT_MAX
- VOUT_MIN
- VOUT_MARGIN_HIGH
- VOUT_MARGIN_LOW
- VOUT_OV_WARN_LIMIT
- VOUT_OV_FAULT_LIMIT
- VOUT_UV_WARN_LIMIT
- VOUT_UV_FAULT_LIMIT
- IOUT_OC_LV_FAULT_LIMIT
- READ_VOUT
- POWER_GOOD_ON
- POWER_GOOD_OFF
- MFR_VOUT_MAX
- MFR_VOUT_MIN

Table 17 VOUT_MODE

Command code	Command name	Write Tx	Read Tx	Bytes	Range/Resolution
20h	VOUT_MODE	Write byte	Read byte	1	0x14 – 0x18

1.15 21h – VOUT_COMMAND

VOUT_COMMAND sets the output voltage of the device when selected by the OPERATION command.

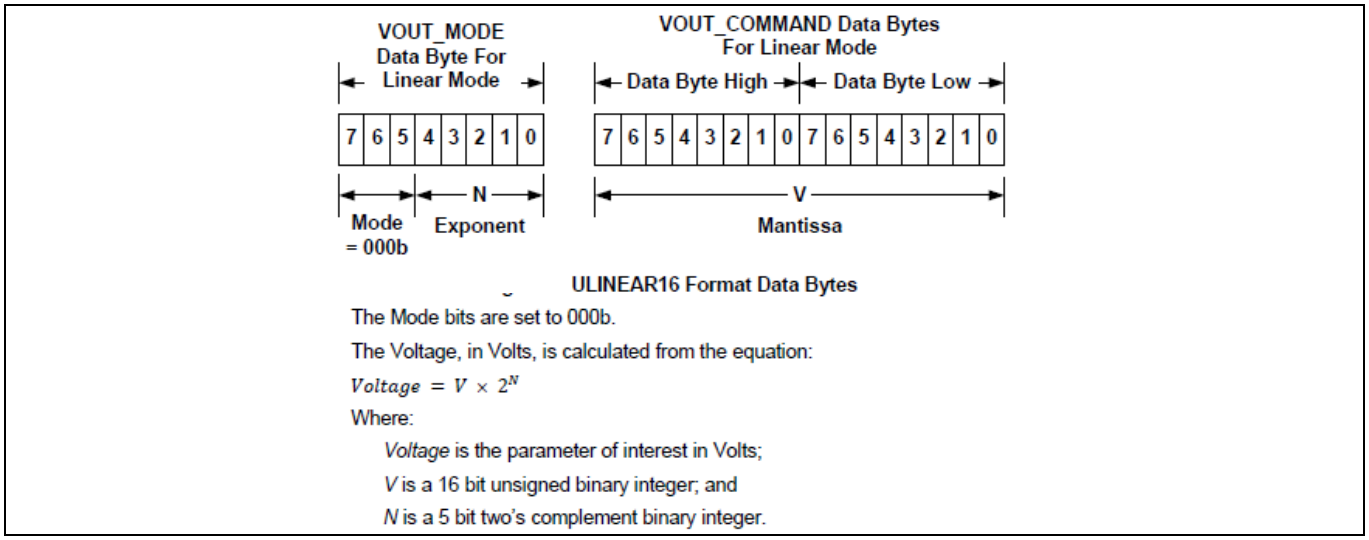

Figure 2 VOUT_MODE and VOUT_COMMAND data byte format

Table 18 VOUT_COMMAND

Command code	Command name	Write Tx	Read Tx	Bytes	Format
21h	VOUT_COMMAND	Write word	Read word	2	vout_mode

1.16 22h – VOUT_TRIM

The VOUT_TRIM command is used to apply a fixed offset voltage to the output voltage command value. It is most typically used by the end user to trim the output voltage at the time the PMBus® device is assembled into the end user's system.

Table 19 VOUT_TRIM

Command code	Command name	Write Tx	Read Tx	Bytes	Format
22h	VOUT_TRIM	Write word	Read word	2	vout_mode_signed

1.17 23h – VOUT_CAL_OFFSET

The VOUT_CAL_OFFSET command is used to apply a fixed offset voltage to the output voltage command value. It is most typically used by the PMBus® device manufacturer to calibrate a device in the factory.

Table 20 VOUT_CAL_OFFSET

Command code	Command name	Write Tx	Read Tx	Bytes	Format
23h	VOUT_CAL_OFFSET	Write word	Read word	2	vout_mode_signed

1.18 24h – VOUT_MAX

The VOUT_ MAX command sets an upper limit on the output voltage the unit can command regardless of any other commands or combinations. The intention of this command is to provide a safeguard against a user accidentally setting the output voltage to a possibly destructive level rather than to be the primary output overvoltage protection.

Table 21 VOUT_MAX

Command code	Command name	Write Tx	Read Tx	Bytes	Format
24h	VOUT_MAX	Write word	Read word	2	vout_mode

1.19 25h – VOUT_MARGIN_HIGH

This VOUT_MARGIN_HIGH command loads the unit with the voltage to which the output is to be changed when the OPERATION command is set to margin high.

Table 22 VOUT_MARGIN_HIGH

Command code	Command name	Write Tx	Read Tx	Bytes	Format
25h	VOUT_MARGIN_HIGH	Write word	Read word	2	vout_mode

1.20 26h – VOUT_MARGIN_LOW

This VOUT_MARGIN_LOW command loads the unit with the voltage to which the output is to be changed when the OPERATION command is set to margin low.

Table 23 VOUT_MARGIN_LOW

Command code	Command name	Write Tx	Read Tx	Bytes	Format
26h	VOUT_MARGIN_LOW	Write word	Read word	2	vout_mode

1.21 27h – VOUT_TRANSITION_RATE

When a PMBus® device receives either a VOUT_COMMAND or OPERATION (margin high, margin low, margin off) that causes the output voltage to change, this command sets the rate in mV/µs at which the output should change voltage. This commanded rate of change does not apply when the unit is commanded to turn on or to turn off. This command has two data bytes in the LINEAR11 data format. An exponent of -3 is supported. The resolution is 0.125 mV/µs and the range is 0 to 63.875 mV/µs.

Table 24 VOUT_TRANSITION_RATE

Command code	Command name	Write Tx	Read Tx	Bytes	Range/ Res
27h	VOUT_TRANSITION_RATE	Write word	Read word	2	U6.3

1.22 28h – VOUT_DROOP

The VOUT_DROOP sets the rate, in mV/A (mΩ), at which the output voltage decreases (or increases) with increasing (or decreasing) output current for use with adaptive voltage positioning requirements and passive current sharing schemes. This command has two data bytes in LINEAR11 data format, supports U8.-2, U9.-1, U10.0, U9.1, U8.2, U7.3, U6.4, U5.5, U4.6, U3.7, U2.8 data format. The maximum droop resistance is limited to 15.9922 mΩ/VOUT_SCALE_LOOP.

Table 25 VOUT_DROOP

Command code	Command name	Write Tx	Read Tx	Bytes	Range/ Res
28h	VOUT_DROOP	Write word	Read word	2	U8.-2, U9.-1, U10.0, U9.1, U8.2, U7.3, U6.4, U5.5, U4.6, U3.7, U2.8

1.23 29h – VOUT_SCALE_LOOP

The VOUT_SCALE_LOOP command scales VOUT_COMMAND, etc. for the external resistor divider on the voltage sense input to the device. The vout_scale register has LSB 2^-16, range 0.0 to 0.99998.

For example, for resistor divider ratio 0.1, set VOUT_SCALE_LOOP = 0.1 * 2^16 = 6554 (D) = 199 A (H). Write VOUT_SCALE_LOOP = 0x199 A would set the scale to 0.1.

D: Data in decimal

H: Data in hex

Table 26 VOUT_SCALE_LOOP

Command code	Command name	Write Tx	Read Tx	Bytes	Format
29h	VOUT_SCALE_LOOP	Write word	Read word	2	Direct U0.16

1.24 2Bh – VOUT_MIN

The VOUT_MIN command sets a lower limit on the output voltage the unit can command regardless of any other commands or combinations. The intention of this command is to provide a safeguard against a user accidentally setting the output voltage to a possibly destructive level rather than to be the primary output undervoltage protection.

Table 27 VOUT_MIN

Command code	Command name	Write Tx	Read Tx	Bytes	Format
2Bh	VOUT_MIN	Write word	Read word	2	vout_mode

1.25 32h – MAX_DUTY

The MAX_DUTY command sets the maximum duty cycle, in percent, of the unit's power conversion stage. This command has two data bytes in the LINEAR11 data format.

Table 28 MAX_DUTY

Command code	Command name	Write Tx	Read Tx	Bytes	Range/ Res
32h	MAX_DUTY	Write word	Read word	2	U7.2

1.26 33h – FREQUENCY_SWITCH

The FREQUENCY_SWITCH command sets the switching frequency in kHz. This command has two data bytes in the LINEAR11 data format. The switching frequency can be set in range 50 kHz to 2 MHz, with switching period resolution 5 ns.

Table 29 FREQUENCY_SWITCH

Command code	Command name	Write Tx	Read Tx	Bytes	Range/ Res
33h	FREQUENCY_SWITCH	Write word	Read word	2	U11.-1, U10.0, U9.1

1.27 34h – POWER_MODE

The POWER_MODE command is used to set or read the PMBus® device power conversion mode of operation.

Table 30 POWER_MODE

Command code	Command name	Write Tx	Read Tx	Bytes	Format
34h	POWER_MODE	Write byte	Read byte	1	See Table 31

Table 31 POWER_MODE definition

Bit	Field Name	Meaning
7:4	reserved	reserved
3	Burst/DE Mode	If POWER_MODE[2:0] = 0 or 5, 0: Enable de mode. 1: Enable burst mode.
2:0	Power Mode	0: Maximum efficiency => Enable light load mode operation. Select DE mode or burst mode based on bit 3 config (auto phase shed enabled if interleave) 1: reserved 2: reserved 3: Maximum power(PS0 Mode) => disable auto DE mode (phase shedding can be enable or disable in I2C Regs) 4: Single phase mode 1 => shed to 1 phase with DE mode and burst mode not allowed 5: Single phase mode 2 => shed to 1 phase with DE mode and burst mode allowed 6: reserved 7: Low power mode: clock gating and block disables to save power

1.28 35h – VIN_ON

The VIN_ON command sets the value of the input voltage, in volts, at which the unit should start power conversion. This command has two data bytes in the LINEAR11 data format.

Table 32 VIN_ON

Command code	Command name	Write Tx	Read Tx	Bytes	Range/ Res
35h	VIN_ON	Write word	Read word	2	U8.2, U9.1

1.29 36h – VIN_OFF

The VIN_OFF command sets the value of the input voltage, in volts, at which the unit, once operation has started, should stop power conversion. This command has two data bytes in the LINEAR11 data format.

Table 33 VIN_OFF

Command code	Command name	Write Tx	Read Tx	Bytes	Range/ Res
36h	VIN_OFF	Write word	Read word	2	U8.2, U9.1

1.30 37h – INTERLEAVE

The INTERLEAVE command is used to arrange multiple units so that their switching periods can be distributed in time. This may be used to facilitate paralleling of multiple units or to reduce AC currents injected into the power bus. This command is also used to config the phase shift of phase 0 of an interleaved topology.

Table 34 INTERLEAVE command data byte

Byte	High byte		Low byte	
Bit number	**7:4**	**3:0**	**7:4**	**3:0**
Contents	Not used	Group ID number	Number in group	Interleave order
Default value	00	00	00	00

If the Group ID number is zero, then Number in group and Interleave order number are zeroes and the programming of these numbers is disabled. If the Group ID number is non-zero, the user can set Number in group and Interleave order.

The phase shift (lag) is defined by: $360^\circ \times \frac{\text{Interleave_order}}{\text{Number_in_group}}$

Table 35 INTERLEAVE

Command code	Command name	Write Tx	Read Tx	Bytes
37h	INTERLEAVE	Write word	Read word	2

1.31 39h – IOUT_CAL_OFFSET

The IOUT_CAL_OFFSET is used to null out any offsets in the output current sensing circuit of ISEN1. This command has two data bytes in the LINEAR11 data format.

Table 36 IOUT_CAL_OFFSET

Command code	Command name	Write Tx	Read Tx	Bytes	Range/ Res
39h	IOUT_CAL_OFFSET	Write word	Read word	2	S7.4

1.32 3Ah – FAN_CONFIG_1_2

The FAN_CONFIG_1_2 is used to configure the fan in system.

Table 37 FAN_CONFIG_1_2 data byte format

Bit(s)	Value	Meaning
7	1	A fan is installed in position 1
	0	No fan is installed in position 1
6	1	Fan 1 is commanded in RPM (reserved)
	0	Fan 1 is commanded in Duty Cycle
5:4	00b-11b	Fan 1 tachometer Pulses Per Revolution
3:0	0000	No fan is installed in position 2 (reserved)

Bit 5:4 of the command tells the PMBus® device the number of tachometer pulses per revolution of fan 1. This information is needed for commanding and reporting fan speed in RPM. Bit 3:0 is reserved for fan 2 (not implemented). The binary values of these bits map to pulses per revolution as follows:

- 00b = 1 pulse per revolution,
- 01b = 2 pulses per revolution,
- 10b = 3 pulses per revolution, and
- 11b = 4 pulses per revolution

For example, to set a fan at position 1, with duty-cycle control, tachometer 2 pulses per revolution, write 0x90 to command FAN_CONFIG_1_2.

1.33 3Bh – FAN_COMMAND_1

The FAN_COMMAND_1 is used to adjust the operation of fan 1 duty-cycle when operating in duty cycle mode. This command has two data bytes to set the fan PWM duty-cycle in Linear11 Format.

Table 38 FAN_COMMAND_1

Command code	Command name	Write Tx	Read Tx	Bytes	Format
3Bh	FAN_COMMAND_1	Write word	Read word	2	U0.8

1.34 40h – VOUT_OV_FAULT_LIMIT

The VOUT_OV_FAULT_LIMIT command sets the value of the output voltage measured at the sense or output pins that cause an output overvoltage fault.

Table 39 VOUT_OV_FAULT_LIMIT

Command code	Command name	Write Tx	Read Tx	Bytes	Format
40h	VOUT_OV_FAULT_LIMIT	Write word	Read word	2	vout_mode

1.35 41h – VOUT_OV_FAULT_RESPONSE

The VOUT_OV_FAULT_RESPONSE command instructs the device on what action to take in response to an output overvoltage fault. This command returns one data byte with contents as follows:

Table 40 VOUT_OV_FAULT_RESPONSE data format

Bit	Meaning
7:6	Response: 00: Ignore 01: Continue operation for the delay time specified by fwconfig variable delayed_shut_time_vout. If the fault condition is still present at the end of the delay time, respond according to Retry Setting (bits [5:3]). 10: Shutdown and respond according to Retry Setting (bits [5:3]). 11: Disable and resume when OK
5:3	Retry setting: 000: No retry 001 to 110: Retry 1 to 6 times based on number 111: Retry continuously
2:0	Delay time for retry. Delay time in ms = Delay Time * Vout_Delay_Unit (configured by fw_config_faults_delay_unit_vout)

Table 41 VOUT_OV_FAULT_RESPONSE

Command code	Command name	Write Tx	Read Tx	Bytes	Format
41h	VOUT_OV_FAULT_RESPONSE	Write byte	Read byte	1	See Table 40

1.36 42h – VOUT_OV_WARN_LIMIT

The VOUT_OV_WARN_LIMIT command sets the value of the output voltage at the sense or output pins that causes an output voltage high warning. This value is typically less than the output overvoltage threshold. The warning limit is used by firmware (FW) as the hysteresis of the VOUT OV fault.

Table 42 VOUT_OV_WARN_LIMIT

Command code	Command name	Write Tx	Read Tx	Bytes	Format
42h	VOUT_OV_WARN_LIMIT	Write word	Read word	2	vout_mode

1.37 43h – VOUT_UV_WARN_LIMIT

The VOUT_UV_WARN_LIMIT command sets the value of the output voltage at the sense or output pins that causes an output voltage low warning. This value is typically greater than the output undervoltage fault threshold. The warning threshold is used by FW as the hysteresis of the VOUT UV fault.

Table 43 VOUT_UV_WARN_LIMIT

Command code	Command name	Write Tx	Read Tx	Bytes	Format
43h	VOUT_UV_WARN_LIMIT	Write word	Read word	2	vout_mode

1.38 44h – VOUT_UV_FAULT_LIMIT

The VOUT_UV_FAULT_LIMIT command sets the value of the output voltage at the sense or output pins that cause an output undervoltage fault.

Table 44 VOUT_UV_FAULT_LIMIT

Command code	Command name	Write Tx	Read Tx	Bytes	Format
44h	VOUT_UV_FAULT_LIMIT	Write word	Read word	2	vout_mode

1.39 45h – VOUT_UV_FAULT_RESPONSE

The VOUT_UV_FAULT_RESPONSE command instructs the device on what action to take in response to an output undervoltage fault. This command returns one data byte with contents as follows:

Table 45 VOUT_UV_FAULT_RESPONSE data format

Bit	Meaning
7:6	Response: 00: Ignore 01: Continue operation for the delay time specified by fwconfig variable delayed_shut_time_vout. If the fault condition is still present at the end of the delay time, respond according to Retry Setting (bits [5:3]). 10: Disable and no retry
5:3	Retry setting: Only support no retry 000
2:0	Delay time for retry: Only support no retry 000

Table 46 VOUT_UV_FAULT_RESPONSE

Command code	Command name	Write Tx	Read Tx	Bytes	Format
45h	VOUT_UV_FAULT_RESPONSE	Write byte	Read byte	1	See Table 45

1.40 46h – IOUT_OC_FAULT_LIMIT

The IOUT_OC_FAULT_LIMIT command sets the value of the output current, in amperes, that causes the overcurrent detector to indicate an overcurrent fault condition. This command has two data bytes in the LINEAR11 data format.

Table 47 IOUT_OC_FAULT_LIMIT

Command code	Command name	Write Tx	Read Tx	Bytes	Range/ Res
46h	IOUT_OC_FAULT_LIMIT	Write word	Read word	2	U9.1, U8.2, U7.3, U6.4

1.41 47h – IOUT_OC_FAULT_RESPONSE

The IOUT_OC_FAULT_RESPONSE command instructs the device on what action to take in response to an output overcurrent fault. This command returns one data byte with contents as follows:

Table 48 IOUT_OC_FAULT_RESPONSE data format

Bit	Meaning
7:6	Response: 00: Continues to operate while maintaining the output current (CC) at IOUT_OC_FAULT_LIMIT 01: Continues to operate while maintaining the output current at IOUT_OC_FAULT_LIMIT, as long as the voltage remains above IOUT_OC_LV_FAULT_LIMIT 10: Continues to operate while maintaining the output current at IOUT_OC_FAULT_LIMIT, as long as the voltage remains above IOUT_OC_LV_FAULT_LIMIT for the time specified by fwconfig variable delayed_shut_time_iout then if still operating in current limiting, shutdown and respond according to retry bits [5:3] 11: Shut down and retry according to retry bits [5:3]
5:3	Retry setting: 000: No retry 001 to 110: Retry 1 to 6 times based on retry number 111: Retry continuously
2:0	Delay time for retry. Delay time in ms = Delay Time * Iout_Delay_Unit (configured by fw_config_faults_delay_unit_iout)

Table 49 IOUT_OC_FAULT_RESPONSE

Command code	Command name	Write Tx	Read Tx	Bytes	Format
47h	IOUT_OC_FAULT_RESPONSE	Write byte	Read byte	1	See Table 48

1.42 48h – IOUT_OC_LV_FAULT_LIMIT

In the case where the response to an overcurrent condition is to operate in a constant current mode unless the output voltage is pulled below the specified value, the IOUT_OC_LV_FAULT_LIMIT specifies that voltage threshold.

Table 50 IOUT_OC_LV_FAULT_LIMIT

Command code	Command name	Write Tx	Read Tx	Bytes	Format
48h	IOUT_OC_LV_FAULT_LIMIT	Write word	Read word	2	vout_mode

1.43 49h - IOUT_OC_LV_FAULT_RESPONSE

The IOUT_OC_LV_FAULT_RESPONSE command instructs the device on what action to take in response to an output overcurrent fault when the output voltage has been pulled below the specified threshold.

This command returns one data byte with contents as follows:

Table 51 IOUT_OC_LV_FAULT_RESPONSE data format

Bit	Meaning
7:6	Response: 00: Ignore 01: Continue operation for the delay time specified by fwconfig variable delayed_shut_time_iout. If the fault condition is still present at the end of the delay time, respond according to Retry Setting (bits [5:3]) 10: Disable and retry according to Retry Setting (bits [5:3]) 11: Disable and resume when OK
5:3	Retry setting: 000: No retry 001 to 110: Retry 1 to 6 times based on retry number 111: Retry continuously
2:0	Delay time for retry. Delay time in ms = Delay Time * Iout_Delay_Unit (configured by fw_config_faults_delay_unit_iout)

Table 52 IOUT_OC_LV_FAULT_RESPONSE

Command code	Command name	Write Tx	Read Tx	Bytes	Format
49h	IOUT_OC_LV_FAULT_RESPONSE	Write byte	Read byte	1	See Table 51

1.44 4Ah – IOUT_OC_WARN_LIMIT

The IOUT_OC_WARN_LIMIT command sets the value of the output current that causes an output overcurrent warning. The IOUT OC warning threshold is used by FW as fault hysteresis. This command has two data bytes in the LINEAR11 data format.

Table 53 IOUT_OC_WARN_LIMIT

Command code	Command name	Write Tx	Read Tx	Bytes	Range/ Res
4Ah	IOUT_OC_WARN_LIMIT	Write word	Read word	2	U9.1, U8.2, U7.3, U6.4

1.45 4Bh – IOUT_UC_FAULT_LIMIT

For units with a synchronous rectifier in the output, current can flow from the unit to the load or from the load into the output. When current flows from the unit to the load the unit is said to be sourcing current, and the output current is declared to be positive. When the current is flowing into the unit from the load, the unit is said to be sinking current, and the current is declared to be negative.

Table 54 IOUT_UC_FAULT_LIMIT

Command code	Command name	Write Tx	Read Tx	Bytes	Range/ Res
4Bh	IOUT_UC_FAULT_LIMIT	Write word	Read word	2	S9.1, S8.2, S7.3, S6.4

1.46 4Ch – IOUT_UC_FAULT_RESPONSE

The IOUT_UC_FAULT_RESPONSE command instructs the device on what action to take in response to an output undercurrent fault. This command returns one data byte with contents as follows:

Table 55 IOUT_UC_FAULT_RESPONSE data format

Bit	Meaning
7:6	Response: 00: Ignore 01: continue operation for time specified by fwconfig variable delayed_shut_time_iout then if fault condition still present, shutdown and respond according to retry bits [5:3] 10: Disable and retry according to Retry Setting (bits [5:3]) 11: Disable SR and resume SR when OK
5:3	Retry setting: 000: No retry 001 to 110: Retry 1 to 6 times based on retry number 111: Retry continuously
2:0	Delay time for retry. Delay time in ms = Delay Time * Iout_Delay_Unit (configured by fw_config_faults_delay_unit_iout)

Table 56 IOUT_UC_FAULT_RESPONSE

Command code	Command name	Write Tx	Read Tx	Bytes	Format
4Ch	IOUT_UC_FAULT_RESPONSE	Write byte	Read byte	1	See Table 55

1.47 4Fh – OT_FAULT_LIMIT

The OT_FAULT_LIMIT command sets the temperature of the unit, in degrees Celsius, at which it should indicate an overtemperature fault. This command has two data bytes in the LINEAR11 data format.

Table 57 OT_FAULT_LIMIT

Command code	Command name	Write Tx	Read Tx	Bytes	Range/ Res
4Fh	OT_FAULT_LIMIT	Write word	Read word	2	U8.0

1.48 50h – OT_FAULT_RESPONSE

The OT_FAULT_RESPONSE command instructs the device on what action to take in response to an overtemperature fault. This command returns one data byte with contents as follows:

Table 58 OT_FAULT_RESPONSE data format

Bit	Meaning
7:6	Response: 00: Ignore 01: Continue operation for the delay time specified by fwconfig variable delayed_shut_time_temp. If the fault condition is still present at the end of the delay time, respond according to Retry Setting (bits [5:3]) 10: Disable and retry according to Retry Setting (bits [5:3]) 11: Disable and resume when OK
5:3	Retry setting: 000: No retry 001 to 110: Retry 1 to 6 times based on retry number 111: Retry continuously
2:0	Delay time for retry. Delay time in ms = Delay Time * Temperature_Delay_Unit (configured by fw_config_faults_delay_unit_temp)

Table 59 OT_FAULT_RESPONSE

Command code	Command name	Write Tx	Read Tx	Bytes	Format
50h	OT_FAULT_RESPONSE	Write byte	Read byte	1	See Table 58

1.49 51h – OT_WARN_LIMIT

The OT_WARN_LIMIT command sets the temperature of the unit, in degrees Celsius, at which it should indicate an overtemperature (OT) warning alarm. The OT warning threshold is used by FW as hysteresis of the OT fault. This command has two data bytes in the LINEAR11 data format.

Table 60 OT_WARN_LIMIT

Command code	Command name	Write Tx	Read Tx	Bytes	Range/ Res
51h	OT_WARN_LIMIT	Write word	Read word	2	U8.0

1.50 52h – UT_WARN_LIMIT

The UT_WARN_LIMIT command sets the temperature of the unit, at degrees Celsius, at which it should indicate an undertemperature (UT) warning alarm. The UT warning threshold is used by FW as hysteresis of the UT fault. This command has two data bytes in the LINEAR11 data format.

Table 61 UT_WARN_LIMIT

Command code	Command name	Write Tx	Read Tx	Bytes	Range/ Res
52h	UT_WARN_LIMIT	Write word	Read word	2	S9.-1

1.51 53h – UT_FAULT_LIMIT

The UT_FAULT_LIMIT command sets the temperature of the unit, in degrees Celsius, at which it should indicate an UT fault. This command has two data bytes in the LINEAR11 data format.

Table 62 UT_FAULT_LIMIT

Command code	Command name	Write Tx	Read Tx	Bytes	Range/ Res
53h	UT_FAULT_LIMIT	Write word	Read word	2	S9.-1

1.52 54h – UT_FAULT_RESPONSE

The UT_FAULT_RESPONSE command instructs the device on what action to take in response to an UT fault. This command returns one data byte with contents as follows:

Table 63 UT_FAULT_RESPONSE data format

Bit	Meaning
7:6	Response: 00: Ignore 01: Continue operation for the delay time specified by fwconfig variable delayed_shut_time_temp. If the fault condition is still present at the end of the delay time, respond according to Retry Setting (bits [5:3]) 10: Disable and retry according to Retry Setting (bits [5:3]) 11: Disable and resume when OK
5:3	Retry setting: 000: No retry 001 to 110: Retry 1 to 6 times based on retry number 111: Retry continuously
2:0	Delay time for retry. Delay time in ms = Delay Time * Temperature_Delay_Unit (configured by fw_config_faults_delay_unit_temp)

Table 64 UT_FAULT_RESPONSE

Command code	Command name	Write Tx	Read Tx	Bytes	Format
54h	UT_FAULT_RESPONSE	Write byte	Read byte	1	See Table 63

1.53 55h – VIN_OV_FAULT_LIMIT

The VIN_OV_FAULT_LIMIT command sets the value of the input voltage that causes an input overvoltage fault. This command has two data bytes in the LINEAR11 data format.

Table 65 VIN_OV_FAULT_LIMIT

Command code	Command name	Write Tx	Read Tx	Bytes	Range/ Res
55h	VIN_OV_FAULT_LIMIT	Write word	Read word	2	U9.1, U8.2, U7.3, U6.4

1.54 56h – VIN_OV_FAULT_RESPONSE

The VIN_OV_FAULT_RESPONSE command instructs the device on what action to take in response to an input overvoltage fault. This command returns one data byte with contents as follows:

Table 66 VIN_OV_FAULT_RESPONSE data format

Bit	Meaning
7:6	Response: 00: Ignore 01: Continue operation for the delay time specified by fwconfig variable delayed_shut_time_vin. If the fault condition is still present at the end of the delay time, respond according to Retry Setting (bits [5:3]) 10: Disable and retry according to Retry Setting (bits [5:3]) 11: Disable and resume when OK
5:3	Retry setting: 000: No retry 001 to 110: Retry 1 to 6 times based on retry number 111: Retry continuously
2:0	Delay time for retry. Delay time in ms = Delay Time * Vin_Delay_Unit (configured by fw_config_faults_delay_unit_vin)

Table 67 VIN_OV_FAULT_RESPONSE

Command code	Command name	Write Tx	Read Tx	Bytes	Format
56h	VIN_OV_FAULT_RESPONSE	Write byte	Read byte	1	See Table 66

1.55 57h – VIN_OV_WARN_LIMIT

The VIN_OV_WARN_LIMIT command sets the value of the input voltage that causes an input voltage high warning. This value is typically less than the input overvoltage fault threshold. The VIN OV warning threshold is used by FW as the hysteresis of the VIN OV fault. This command has two data bytes in the LINEAR11 data format.

Table 68 VIN_OV_WARN_LIMIT

Command code	Command name	Write Tx	Read Tx	Bytes	Range/ Res
57h	VIN_OV_WARN_LIMIT	Write word	Read word	2	U9.1, U8.2, U7.3, U6.4

1.56 58h – VIN_UV_WARN_LIMIT

The VIN_UV_WARN_LIMIT command sets the value of the input voltage that causes an input voltage low warning. The VIN UV warning threshold is used by FW as the hysteresis of the VIN UV fault. This command has two data bytes in the LINEAR11 data format.

Table 69 VIN_UV_WARN_LIMIT

Command code	Command name	Write Tx	Read Tx	Bytes	Range/ Res
58h	VIN_UV_WARN_LIMIT	Write word	Read word	2	U9.1, U8.2, U7.3, U6.4

1.57 59h – VIN_UV_FAULT_LIMIT

The VIN_UV_FAULT_LIMIT command sets the value of the input voltage that causes an input undervoltage fault. This command has two data bytes in the LINEAR11 data format.

Table 70 VIN_UV_FAULT_LIMIT

Command code	Command name	Write Tx	Read Tx	Bytes	Range/ Res
59h	VIN_UV_FAULT_LIMIT	Write word	Read word	2	U9.1, U8.2, U7.3, U6.4

1.58 5Ah – VIN_UV_FAULT_RESPONSE

The VIN_UV_FAULT_RESPONSE command instructs the device on what action to take in response to an input undervoltage fault. This command returns one data byte with contents as follows:

Table 71 VIN_UV_FAULT_RESPONSE data format

Bit	Meaning
7:6	Response: 00: Ignore 01: Continue operation for the delay time specified by fwconfig variable delayed_shut_time_vin. If the fault condition is still present at the end of the delay time, respond according to Retry Setting (bits [5:3]) 10: Disable and retry according to Retry Setting (bits [5:3]) 11: Disable and resume when OK
5:3	Retry setting: 000: No retry 001 to 110: Retry 1 to 6 times based on retry number 111: Retry continuously
2:0	Delay time for retry. Delay time in ms = Delay Time * Vin_Delay_Unit (configured by fw_config_faults_delay_unit_vin)

Table 72 VIN_UV_FAULT_RESPONSE

Command code	Command name	Write Tx	Read Tx	Bytes	Format
5Ah	VIN_UV_FAULT_RESPONSE	Write byte	Read byte	1	See Table 71

1.59 5Bh – IIN_OC_FAULT_LIMIT

The IIN_OC_FAULT_LIMIT command sets the value of the input current, in amperes, that causes an input overcurrent fault. This command has two data bytes in the LINEAR11 data format.

Table 73 IIN_OC_FAULT_LIMIT

Command code	Command name	Write Tx	Read Tx	Bytes	Range/ Res
5Bh	IIN_OC_FAULT_LIMIT	Write word	Read word	2	U9.1, U8.2, U7.3, U6.4

1.60 5Ch – IIN_OC_FAULT_RESPONSE

The IIN_OC_FAULT_RESPONSE command instructs the device on what action to take in response to an input overcurrent fault. This command returns one data byte with contents as follows. Delayed shutdown is not supported for estimated iin when IIN_ESTIMATE_EN =1, the response will be trated as ignored.

Table 74 IIN_OC_FAULT_RESPONSE data format

Bit	Meaning
7:6	Response: 00: Ignore 01: Continue operation for the delay time specified by fwconfig variable delayed_shut_time_vin. If the fault condition is still present at the end of the delay time, respond according to Retry Setting (bits [5:3]) 10: Disable and retry according to Retry Setting (bits [5:3]) 11: Disable and resume when OK
5:3	Retry setting: 000: No retry 001 to 110: Retry 1 to 6 times based on retry number 111: Retry continuously
2:0	Delay time for retry. Delay time in ms = Delay Time * Vin_Delay_Unit (configured by fw_config_faults_delay_unit_vin)

Table 75 IIN_OC_FAULT_RESPONSE

Command code	Command name	Write Tx	Read Tx	Bytes	Format
5Ch	IIN_OC_FAULT_RESPONSE	Write byte	Read byte	1	See Table 74

1.61 5Dh – IIN_OC_WARN_LIMIT

The IIN_OC_WARN_LIMIT command sets the value of the input current, in amperes, that causes an input overcurrent warning. The input OC warning threshold is used by FW as the input OC fault hysteresis. This command has two data bytes in the LINEAR11 data format.

Table 76 IIN_OC_WARN_LIMIT

Command code	Command name	Write Tx	Read Tx	Bytes	Range/ Res
5Dh	IIN_OC_WARN_LIMIT	Write word	Read word	2	U9.1, U8.2, U7.3, U6.4

1.62 5Eh – POWER_GOOD_ON

The POWER_GOOD_ON command sets the output voltage at which an optional POWER GOOD signal should be asserted, indicating that the output voltage is valid. Note that depending on the choice of the device manufacturer, a device may drive a POWER GOOD signal high or low to indicate that the signal is asserted.

Table 77 POWER_GOOD_ON

Command code	Command name	Write Tx	Read Tx	Bytes	Format
5Eh	POWER_GOOD_ON	Write word	Read word	2	vout_mode

1.63 5Fh – POWER_GOOD_OFF

The POWER_GOOD_OFF command sets the output voltage at which an optional POWER GOOD signal should be negated, indicating that the output voltage is not valid. Note that depending on the choice of the device manufacturer, a device may drive a POWER GOOD signal high or low to indicate that the signal is negated.

Table 78 POWER_GOOD_OFF

Command code	Command name	Write Tx	Read Tx	Bytes	Format
5Fh	POWER_GOOD_OFF	Write word	Read word	2	vout_mode

1.64 60h – TON_DELAY

The TON_DELAY command sets the time, in milliseconds, from when a start condition is received (as programmed by the ON_OFF_CONFIG command) until the output voltage starts to rise. This command has two data bytes in the LINEAR11 data format.

Table 79 TON_DELAY

Command code	Command name	Write Tx	Read Tx	Bytes	Range/ Res
60h	TON_DELAY	Write word	Read word	2	U8.2, U9.1, U10.0, U11.-1

1.65 61h – TON_RISE

The TON_RISE command sets the time, in milliseconds, from when the output starts to rise until the voltage has entered the regulation band. This command has two data bytes in the LINEAR11 data format.

Table 80 TON_RISE

Command code	Command name	Write Tx	Read Tx	Bytes	Range/ Res
61h	TON_RISE	Write word	Read word	2	U8.2, U9.1, U10.0

1.66 62h – TON_MAX_FAULT_LIMIT

The TON_MAX_FAULT_LIMIT command sets an upper limit, in milliseconds, on how long the unit can attempt to power up the output without reaching the output undervoltage fault limit. This command has two data bytes in the LINEAR11 data format.

Table 81 TON_MAX_FAULT_LIMIT

Command code	Command name	Write Tx	Read Tx	Bytes	Range/ Res
62h	TON_MAX_FAULT_LIMIT	Write word	Read word	2	U8.2, U9.1, U10.0

1.67 63h – TON_MAX_FAULT_RESPONSE

The TON_MAX_FAULT_RESPONSE command instructs the device on what action to take in response to a TON_MAX fault. This command returns one data byte with contents as follows:

Table 82 TON_MAX_FAULT_RESPONSE data format

Bit	Meaning
7:6	Response: 00: Ignore 01: Continue operation for the delay time specified by fwconfig variable delayed_shut_time_vout. If the fault condition is still present at the end of the delay time, respond according to Retry Setting (bits [5:3]) 10: Disable and retry according to Retry Setting (bits [5:3]) 11: Disable and resume when OK
5:3	Retry setting: 000: No retry 001 to 110: Retry 1 to 6 times based on retry number 111: Retry continuously
2:0	Delay time for retry. Delay time in ms = Delay Time * Vout_Delay_Unit (configured by fw_config_faults_delay_unit_vout)

Table 83 TON_MAX_FAULT_RESPONSE

Command code	Command name	Write Tx	Read Tx	Bytes	Format
63h	TON_MAX_FAULT_RESPONSE	Write byte	Read byte	1	See Table 82

1.68 64h – TOFF_DELAY

The TOFF_DELAY command sets the time, in milliseconds, from when a stop condition is received (as programmed by the ON_OFF_CONFIG command) until the unit stops transferring energy to the output. This command has two data bytes in the LINEAR11 data format.

Table 84 TOFF_DELAY

Command code	Command name	Write Tx	Read Tx	Bytes	Range/ Res
64h	TOFF_DELAY	Write word	Read word	2	U8.2, U9.1, U10.0, U11.-1

1.69 65h – TOFF_FALL

The TOFF_FALL command sets the time, in milliseconds, from the end of the turn-off delay time until the voltage is commanded to zero. Note that this command can only be used with a device whose output can sink enough current to cause the output voltage to decrease at a controlled rate. This command has two data bytes in the LINEAR11 data format.

Table 85 TOFF_FALL

Command code	Command name	Write Tx	Read Tx	Bytes	Range/ Res
65h	TOFF_FALL	Write word	Read word	2	U8.2, U9.1, U10.0

1.70 66h – TOFF_MAX_WARN_LIMIT

The TON_MAX_WARN_LIMIT command sets an upper limit, in milliseconds, on how long the unit can attempt to power down the output without reaching 12.5 percent of the output voltage programmed at the time the unit is turned off. This command has two data bytes in the LINEAR11 data format.

Table 86 TOFF_MAX_WARN_LIMIT

Command code	Command name	Write Tx	Read Tx	Bytes	Range/ Res
66h	TOFF_MAX_WARN_LIMIT	Write word	Read word	2	U8.2, U9.1, U10.0

1.71 6Ah – POUT_OP_WARN_LIMIT

The POUT_OP_WARN_LIMIT command sets the value of the output power, in watts, that causes a warning that the output power is high. This command has two data bytes in the LINEAR11 data format.

Table 87 POUT_OP_WARN_LIMIT

Command code	Command name	Write Tx	Read Tx	Bytes	Range/ Res
6Ah	POUT_OP_WARN_LIMIT	Write word	Read word	2	U10.0, U11.-1, U12.-2

1.72 6Bh – PIN_OP_WARN_LIMIT

The PIN_OP_WARN_LIMIT command sets the value of the input power, in watts, that causes a warning that the input power is high. This command has two data bytes in the LINEAR11 data format.

Table 88 PIN_OP_WARN_LIMIT

Command code	Command name	Write Tx	Read Tx	Bytes	Range/ Res
6Bh	PIN_OP_WARN_LIMIT	Write word	Read word	2	U10.0, U11.-1, U12.-2

1.73 78h – STATUS_BYTE

The STATUS_BYTE command returns one byte of information with a summary of the most critical faults.

Table 89 STATUS_BYTE data format

Bit	Bit name	Meaning
7	BUSY	A fault was declared because the device was busy and unable to respond.
6	OFF	This bit is asserted if the unit is not providing power to the output, regardless of the reason, including simply not being enabled.
5	VOUT_OV_FAULT	An output overvoltage fault has occurred.
4	IOUT_OC_FAULT	An output overcurrent fault has occurred.
3	VIN_UV_FAULT	An input undervoltage fault has occurred.
2	TEMPERATURE	A temperature fault or warning has occurred.

Bit	Bit name	Meaning
1	CML	A communications, memory or logic fault has occurred.
0	NONE_OF_THE_ABOVE	A fault or warning not listed in bits [7:1] has occurred.

Table 90 STATUS_BYTE

Command code	Command name	Write Tx	Read Tx	Bytes	Format
78h	STATUS_BYTE	Write byte	Read byte	1	See Table 89

1.74 79h – STATUS_WORD

The STATUS_WORD command returns two bytes of information with a summary of the unit's fault condition. Based on the information in these bytes, the host can get more information by reading the appropriate status registers.

Table 91 STATUS_WORD data format

Bit	Bit name	Meaning
15	VOUT	An output voltage fault or warning has occurred.
14	IOUT/POUT	An output current or output power fault or warning has occurred.
13	INPUT	An input voltage, input current, or input power fault or warning has occurred.
12	MFRSPECIFIC	A manufacturer-specific fault or warning has occurred.
11	PG_STATUS#	The POWER_GOOD signal, if present, is negated.
10	FANS	A fan or airflow fault or warning has occurred.
9	OTHER	A bit in STATUS_OTHER is set.
8	UNKNOWN	A fault type not given in bits [15:1] of the STATUS_WORD has been detected.
7	BUSY	A fault was declared because the device was busy and unable to respond.
6	OFF	This bit is asserted if the unit is not providing power to the output, regardless of the reason, including simply not being enabled.
5	VOUT_OV_FAULT	An output overvoltage fault has occurred.
4	IOUT_OC_FAULT	An output overcurrent fault has occurred.
3	VIN_UV_FAULT	An input undervoltage fault has occurred.
2	TEMPERATURE	A temperature fault or warning has occurred.
1	CML	A communications, memory or logic fault has occurred.
0	NONE_OF_THE_ABOVE	A fault or warning not listed in bits [7:1] of this byte has occurred.

Table 92 STATUS_WORD

Command code	Command name	Write Tx	Read Tx	Bytes	Format
79h	STATUS_WORD	Write word	Read word	2	See Table 91

1.75 7Ah – STATUS_VOUT

The STATUS_VOUT command returns one data byte with contents as follows:

Table 93 STATUS_VOUT data format

Bit	Meaning
7	VOUT_OV_FAULT (output overvoltage fault)
6	VOUT_OV_WARNING (output overvoltage warning)
5	VOUT_UV_WARNING (output undervoltage warning)
4	VOUT_UV_FAULT (output undervoltage fault)
3	VOUT_MAX_MIN warning
2	TON_MAX_FAULT
1	TOFF_MAX_WARNING
0	Reserved

Table 94 STATUS_VOUT

Command code	Command name	Write Tx	Read Tx	Bytes	Format
7Ah	STATUS_VOUT	Write byte	Read byte	1	See Table 93

1.76 7Bh – STATUS_IOUT

The STATUS_IOUT command returns one data byte with contents as follows:

Table 95 STATUS_IOUT data format

Bit	Meaning
7	IOUT_OC_FAULT (output overcurrent fault)
6	IOUT_OC_LV_FAULT (output overcurrent and low voltage fault)
5	IOUT_OC_WARNING (output overcurrent warning)
4	IOUT_UC_FAULT (output undercurrent fault)
3	Current share fault
2	In power limiting mode
1	Reserved
0	POUT_OP_WARNING (output overpower warning)

Table 96 STATUS_IOUT

Command code	Command name	Write Tx	Read Tx	Bytes	Format
7Bh	STATUS_IOUT	Write byte	Read byte	1	See Table 95

1.77 7Ch – STATUS_INPUT

The STATUS_INPUT command returns one data byte with contents as follows:

Table 97 STATUS_INPUT data format

Bit	Meaning
7	VIN_OV_FAULT (input overvoltage fault)
6	VIN_OV_WARNING (input overvoltage warning)
5	VIN_UV_WARNING (input undervoltage warning)
4	VIN_UV_FAULT (input undervoltage fault)
3	Unit off for insufficient input voltage
2	IIN_OC_FAULT (input overcurrent fault)
1	IIN_OC_WARNING (input overcurrent warning)
0	PIN_OP_WARNING (input overpower warning)

Table 98 STATUS_INPUT

Command code	Command name	Write Tx	Read Tx	Bytes	Format
7Ch	STATUS_INPUT	Write byte	Read byte	1	See Table 97

1.78 7Dh – STATUS_TEMPERATURE

The STATUS_TEMPERATURE command returns one data byte with contents as follows:

Table 99 STATUS_TEMPERATURE data format

Bit	Meaning
7	OT_FAULT (overtemperature fault)
6	OT_WARNING (overtemperature warning)
5	UT_WARNING (undertemperature warning)
4	UT_FAULT (undertemperature fault)
3	Reserved
2	Reserved
1	Reserved
0	Reserved

Table 100 STATUS_TEMPERATURE

Command code	Command name	Write Tx	Read Tx	Bytes	Format
7Dh	STATUS_TEMPERATURE	Write byte	Read byte	1	See Table 99

1.79 7Eh – STATUS_CML

The STATUS_CML command returns one data byte with contents as follows:

Table 101 STATUS_CML data format

Bit	Meaning
7	Invalid or unsupported command received
6	Invalid or unsupported data received
5	Packet error check failed
4	Memory fault detected
3	Processor fault detected
2	Reserved
1	A communication fault other than the ones listed in this table has occurred
0	Report errors when there is no config or no trim in device

Table 102 STATUS_CML

Command code	Command name	Write Tx	Read Tx	Bytes	Format
7Eh	STATUS_CML	Write byte	Read byte	1	See Table 101

1.80 7Fh – STATUS_OTHER

The STATUS_OTHER command returns one data byte with contents as follows:

Table 103 STATUS_OTHER data format

Bit	Meaning
7	Reserved
6	Reserved
5	Reserved
4	Reserved
3	Reserved
2	Reserved
1	Reserved
0	First to assert SMBALERT#

Table 104 STATUS_OTHER

Command code	Command name	Write Tx	Read Tx	Bytes	Format
7Fh	STATUS_OTHER	Write byte	Read byte	1	See Table 103

1.81 80h – STATUS_MFR_SPECIFIC

The STATUS_MFR_SPECIFIC command returns one data byte with contents as follows:

Table 105 STATUS_MFR_SPECIFIC data format

Bit	Meaning
7	Sync fault
6	Manufacturer defined (unused)
5	IOUT_OC fast fault
4	Common fault (see fault common registers for status)
3	External fault
2	Manufacturer defined (unused)
1	Manufacturer defined (unused)
0	Manufacturer defined (unused)

Table 106 STATUS_MFR_SPECIFIC

Command code	Command name	Write Tx	Read Tx	Bytes	Format
80h	STATUS_MFR_SPECIFIC	Write byte	Read byte	1	See Table 105

1.82 81h – STATUS_FANS_1_2

The STATUS_FANS_1_2 command returns one data byte with contents as follows:

Table 107 STATUS_FANS_1_2 data format

Bit	Meaning
7	Reserved
6	Reserved
5	Reserved
4	Reserved
3	Reserved
2	Reserved
1	Reserved
0	Reserved

Table 108 STATUS_FANS_1_2

Command code	Command name	Write Tx	Read Tx	Bytes	Format
81h	STATUS_FANS_1_2	Write byte	Read byte	1	See Table 107

1.83 88h – READ_VIN

The READ_VIN command returns the input voltage in Volts. This command has two data bytes in the LINEAR11 data format. The READ_VIN exponent is configured by 0xC6 FW_CONFIG_TELEMETRY command.

Table 109 READ_VIN

Command code	Command name	Write Tx	Read Tx	Bytes	Format
88h	READ_VIN		Read word	2	Exp. Configured by FW_CONFIG_TELEMETRY

1.84 89h – READ_IIN

The READ_IIN command returns the input current in amperes. This command has two data bytes in the LINEAR11 data format. The READ_IIN exponent is configured by 0xC6 FW_CONFIG_TELEMETRY command.

Table 110 READ_IIN

Command code	Command name	Write Tx	Read Tx	Bytes	Format
89h	READ_IIN		Read word	2	Exp. Configured by FW_CONFIG_TELEMETRY

1.85 8Bh – READ_VOUT

The READ_VOUT command returns the actual, measured (not commanded) output voltage in the same format as set by the VOUT_MODE command.

Table 111 READ_VOUT

Command code	Command name	Write Tx	Read Tx	Bytes	Format
8Bh	READ_VOUT		Read word	2	Vout_mode

1.86 8Ch – READ_IOUT

The READ_IOUT command returns the measured output current in amperes. This command has two data bytes in the LINEAR11 data format. The READ_IOUT exponent is configured by 0xC6 FW_CONFIG_TELEMETRY command.

Table 112 READ_IOUT

Command code	Command name	Write Tx	Read Tx	Bytes	Format
8Ch	READ_IOUT		Read word	2	Exp. Configured by FW_CONFIG_TELEMETRY

1.87 8Dh – READ_TEMPERATURE_1

The READ_TEMPERATURE1 command returns the temperature to sensor 1 in degrees Celsius. This command has two data bytes in the LINEAR11 data format.

Table 113 READ_TEMPERATURE_1

Command code	Command name	Write Tx	Read Tx	Bytes	Range/ Res
8Dh	READ_TEMPERATURE_1		Read word	2	S10.0

1.88 8Eh – READ_TEMPERATURE_2

The READ_TEMPERATURE_2 command returns the temperature at sensor 2 in degrees Celsius. This command has two data bytes in the LINEAR11 data format.

Table 114 READ_TEMPERATURE_2

Command code	Command name	Write Tx	Read Tx	Bytes	Range/ Res
8Eh	READ_TEMPERATURE_2		Read word	2	S10.0

1.89 90h – READ_FAN_SPEED_1

The READ_FAN_SPEED_1 command returns the speed of FAN1 in RPM. This command has two data bytes in the LINEAR11 data format. The exponent is configured by 0xC6 FW_CONFIG_TELEMETRY command.

Table 115 Read fan speed exponent range

READ_FAN_EXP (PMBus® command FW_CONFIG_TELEMETRY)	Speed range
3	0 to 7.5k RPM
4	7.5k to 15k RPM
5	15k to 30k RPM

Table 116 READ_FAN_SPEED_1

Command code	Command name	Write Tx	Read Tx	Bytes	Format
90h	READ_FAN_SPEED_1		Read word	2	Exp. Configured by FW_CONFIG_TELEMETRY

1.90 94h – READ_DUTY_CYCLE

The READ_DUTY_CYCLE command returns the duty of the PMBus® device's main power converter in percent. This command has two data bytes in the LINEAR11 data format.

Table 117 READ_DUTY_CYCLE

Command code	Command name	Write Tx	Read Tx	Bytes	Range/ Res
94h	READ_DUTY_CYCLE		Read word	2	U7.3

1.91 95h – READ_FREQUENCY

The READ_FREQUENCY command returns the switching frequency of the PMBus® device's main power converter in kilohertz. This command returns the actual switching frequency and not the commanded switching frequency. This command has two data bytes in the LINEAR11 data format.

Table 118 READ_FREQUENCY

Command code	Command name	Write Tx	Read Tx	Bytes	Range/ Res
95h	READ_FREQUENCY		Read word	2	U11.-1

The READ_POUT command returns the output power, in watts, of the PMBus® device. Format configured by 0xC6 FW_CONFIG_TELEMETRY command.

Table 119 READ_POUT

Command code	Command name	Write Tx	Read Tx	Bytes	Range/ Res
96h	READ_POUT		Read word	2	U10.0, U11.-1, U12.-2, U9.1, U8.2 Configured by FW_CONFIG_TELEMETRY

1.92 97h – READ_PIN

The READ_PIN command returns the input power, in watts, of the PMBus® device. Format configured by 0xC6 FW_CONFIG_TELEMETRY command.

Table 120 READ_PIN

Command code	Command name	Write Tx	Read Tx	Bytes	Range/ Res
97h	READ_PIN		Read word	2	U10.0, U11.-1, U12.-2, U9.1, U8.2 Configured by FW_CONFIG_TELEMETRY

1.93 98h – PMBUS_REVISION

PMBUS_REVISION command stores or reads the revision of the PMBus® with which the device is compliant.

Table 121 PMBUS_REVISION

Bits [7:4]	Part I revision	Bits [3:0]	Part II revision
0000b	1.0	0000b	1.0
0001b	1.1	0001b	1.1
0010b	1.2	0010b	1.2
0011b	1.3	0011b	1.3

Table 122 PMBUS_REVISION

Command code	Command name	Write Tx	Read Tx	Bytes
98h	PMBUS_REVISION		Read byte	1

1.94 99h – MFR_ID

The MFR_ID command is used to either set or read the manufacturer's ID (name, abbreviation, or symbol that identifies the unit's manufacturer). Each manufacturer chooses its identifier. MFR_ID is typically only set once, at the time of manufacture.

Table 123 MFR_ID

Command code	Command name	Write Tx	Read Tx	Bytes
99h	MFR_ID	Block write	Block read	12

1.95 9Ah – MFR_MODEL

The MFR_MODEL command is used to either set or read the manufacturer's model number. MFR_MODEL is typically set once, at the time of manufacture.

Table 124 MFR_MODEL

Command code	Command name	Write Tx	Read Tx	Bytes
9Ah	MFR_MODEL	Block write	Block read	20

1.96 9Bh – MFR_REVISION

The MFR_REVISION command is used to either set or read the manufacturer's revision number. Each manufacturer uses the format of its choice for the revision number. MFR_REVISION is typically set at the time of manufacture or if the device is updated to a later revision.

Table 125 MFR_REVISION

Command code	Command name	Write Tx	Read Tx	Bytes
9Bh	MFR_REVISION	Block write	Block read	12

1.97 9Ch – MFR_LOCATION

The MFR_LOCATION command is used to either set or read the manufacturing location of the device. Each manufacturer uses the format of its choice for the location information. MFR_LOCATION is typically only set once, at the time of manufacture.

Table 126 MFR_LOCATION

Command code	Command name	Write Tx	Read Tx	Bytes
9Ch	MFR_LOCATION	Block write	Block read	12

1.98 9Dh – MFR_DATE

The MFR_DATE command is used to either set or read the date the device was manufactured. While each manufacturer uses the format of its choice for the revision number, the recommended MFR_DATE format is YYMMDD where Y, M, and D are integer values from 0 to 9, inclusive. MFR_DATE is typically only set once, at the time of manufacture.

Table 127 MFR_DATE

Command code	Command name	Write Tx	Read Tx	Bytes
9Dh	MFR_DATE	Block write	Block read	12

1.99 9Eh – MFR_SERIAL

The MFR_SERIAL command is used to either set or read the manufacturer's serial number of the device. Each manufacturer uses the format of its choice for the serial number. MFR_SERIAL is typically only set once, at the time of manufacture.

Table 128 MFR_SERIAL

Command code	Command name	Write Tx	Read Tx	Bytes
9Eh	MFR_SERIAL	Block write	Block read	20

1.100 A0h – MFR_VIN_MIN

The MFR_VIN_MIN command sets or retrieves the minimum rated value, in volts, of the input voltage. This command has two data bytes in the LINEAR11 data format.

Table 129 MFR_VIN_MIN

Command code	Command name	Write Tx	Read Tx	Bytes	Range/ Res
A0h	MFR_VIN_MIN	Write word	Read word	2	U9.1, U8.2, U7.3, U6.4

1.101 A1h – MFR_VIN_MAX

The MFR_VIN_MAX command sets or retrieves the maximum rated value, in volts, of the input voltage. This command has two data bytes in the LINEAR11 data format.

Table 130 MFR_VIN_MAX

Command code	Command name	Write Tx	Read Tx	Bytes	Range/ Res
A1h	MFR_VIN_MAX	Write word	Read word	2	U9.1, U8.2, U7.3, U6.4

1.102 A2h – MFR_IIN_MAX

The MFR_IIN_MAX command sets or retrieves the maximum rated value, in amperes, of the input current. This command has two data bytes in the LINEAR11 data format.

Table 131 MFR_IIN_MAX

Command code	Command name	Write Tx	Read Tx	Bytes	Range/ Res
A2h	MFR_IIN_MAX	Write word	Read word	2	U7.0

1.103 A3h – MFR_PIN_MAX

The MFR_PIN_MAX command sets or retrieves the maximum rated value, in watts, of the input power. This command has two data bytes in the LINEAR11 data format.

Table 132 MFR_PIN_MAX

Command code	Command name	Write Tx	Read Tx	Bytes	Range/ Res
A3h	MFR_PIN_MAX	Write word	Read word	2	U10.0, U11.-1, U12.-2

1.104 A4h – MFR_VOUT_MIN

The MFR_VOUT_MIN command sets or retrieves the minimum rated value, in volts, to which the output voltage may be set.

Table 133 MFR_VOUT_MIN

Command code	Command name	Write Tx	Read Tx	Bytes	Format
A4h	MFR_VOUT_MIN	Write word	Read word	2	Vout_mode

1.105 A5h – MFR_VOUT_MAX

The MFR_VOUT_MAX command sets or retrieves the maximum rated value, in volts, to which the output voltage may be set.

Table 134 MFR_VOUT_MAX

Command code	Command name	Write Tx	Read Tx	Bytes	Format
A5h	MFR_VOUT_MAX	Write word	Read word	2	Vout_mode

1.106 A6h – MFR_IOUT_MAX

The MFR_IOUT_MAX command sets or retrieves the maximum rated value, in amperes, to which the output may be loaded. This command has two data bytes in the LINEAR11 data format.

Table 135 MFR_IOUT_MAX

Command code	Command name	Write Tx	Read Tx	Bytes	Range/ Res
A6h	MFR_IOUT_MAX	Write word	Read word	2	U9.1, U8.2, U7.3, U6.4

1.107 A7h – MFR_POUT_MAX

The MFR_POUT_MAX command sets or retrieves the maximum rated output power, in watts, that the unit is rated to supply. This command has two data bytes in the LINEAR11 data format.

Table 136 MFR_POUT_MAX

Command code	Command name	Write Tx	Read Tx	Bytes	Range/ Res
A7h	MFR_POUT_MAX	Write word	Read word	2	U10.0, U11.-1, U12.-2

1.108 A8h – MFR_TAMBIENT_MAX

The MFR_TAMBIENT_MAX command sets or retrieves the maximum rated ambient temperature, in degrees Celsius, in which the unit may be operated. This command has two data bytes in the LINEAR11 data format.

Table 137 MFR_TAMBIENT_MAX

Command code	Command name	Write Tx	Read Tx	Bytes	Range/ Res
A8h	MFR_TAMBIENT_MAX	Write word	Read word	2	U8.0

1.109 ADh – IC_DEVICE_ID

The IC_DEVICE_ID command is used to either set or read the type or part number of an IC embedded within a PMBus® that is used for the PMBus® interface. Each manufacturer uses the format of its choice for IC device identification. IC_DEVICE_ID is typically only set once, at the time of manufacture.

Table 138 IC_DEVICE_ID

Command code	Command name	Write Tx	Read Tx	Bytes	Format
ADh	IC_DEVICE_ID		Read word	2	

1.110 AEh – IC_DEVICE_REV

The IC_DEVICE_REV command is used to either set or read the revision of the IC whose type or part number is set or read with the IC_DEVICE_ID command. Each manufacturer uses the format of its choice for the IC device revision. IC_DEVICE_REV is typically only set once, at the time of manufacture.

Table 139 IC_DEVICE_REV

Command code	Command name	Write Tx	Read Tx	Bytes	Format
AEh	IC_DEVICE_REV		Read word	2	

1.111 B0h – USER_DATA_00

Generic user scratchpad. This command is for the user to keep any of their own model tracking/serial information.

Table 140 USER_DATA_00

Command code	Command name	Write Tx	Read Tx	Bytes	Format
B0h	USER_DATA_00	Block write	Block read	16	

2 PMBus® commands – non-standard

2.1 C4h FW_CONFIG_PWM

FW_CONFIG_PWM defines the PWMx mask of primary FETs and secondary SR FETs. The PWM mask is handled by FW and is automatically programmed by the device topology tool in the GUI. Take the FB-FB example; the PWM1 and PWM2 are mapped to primary FETs, thus the lower two bytes of FW_CONFIG_PWM are 0x0003. PWM5 AND pwm6 are mapped to SR FETs, thus the higer two bytes are 0x0030. It is not recommended to manually change PWM mask with this command, unless non-standard topology is used, and the user wants to manually configure the PWM mask.

Table 141 FW_CONFIG_PWM data format

Bit	Field name	Meaning
31:24	Reserved	Reserved
23:16	pwm_srfet_mask [7:0]	Mask applied to pwm_on register for enabling SR FETs
15:8	Reserved	Reserved
7:0	pwm_on_mask [7:0]	Mask applied to pwm_on register for enabling primary FETs

Table 142 FW_CONFIG_PWM

Command code	Command name	Write Tx	Read Tx	Bytes	Format
C4h	FW_CONFIG_PWM	Block write	Block read	4	See Table 141

2.2 C5h FW_CONFIG_REGULATION

FW_CONFIG_REGULATION configures multi-segment droop parameters, flexible start-up/shutdown functions. It also configures the topology, interleave, current balancing, temperature compensation, and other regulation options.

Table 143 FW_CONFIG_REGULATION data format

Bit	Field name	Meaning
111:96	MFR_RDROOP_ITHR_SEG3	LINEAR11 format load-line droop current threshold for third segment to kick in
95:80	MFR_RDROOP_ITHR_SEG2	LINEAR11 format load-line droop current threshold for second segment to kick in
79:64	MFR_RDROOP_RLL_NEG	LINEAR11 format load-line droop for negative segment of three-segment piecewise linear curve
63:48	MFR_RDROOP_RLL_SEG3	LINEAR11 format load-line droop for third segment of three-segment piecewise linear curve
47:32	MFR_RDROOP_RLL_SEG2	LINEAR11 format load-line droop for second segment of three-segment piecewise linear curve
31:24	VOUT_TARGET_WINDOW	-8 exponent 8-bit format window for when interrupt is created for target voltage reached
23:16	CURRENT_LIMIT_AT_STARTUP	Codes per period current limit delta. The current limit will start from 0 and increase to OTP value of current_limit register at the rate of this register. 0 disables feature.

Bit	Field name	Meaning
15:12	TOPOLOGY	ACF=0, PSCT=1, HBCT=2, HBFW=3, PSFW=4, FBCT=5, FBFW=6, BUCK=7, BOOST=8, BUCK-BOOST=9, LLC_HBFW=10, LLC_HBCT=11, LLC_FBCT=12, LLC_FBFW=13
11	CURRENT_DOUBLER_ENABLE	Enable current doubling for two inductors in circuit
10	EN_DE_SHUTDOWN	Enable diode emulation on shutdown
9	EN_IOUT_APC_TEMP_COMP	Enable temperature compensation on current sense gain
8	INTERLEAVE_ENABLE	Enable multi-phase operation. Interleave mode.
7	IBAL_ENABLE	Enable current balancing
6	EN_RAMP_SWITCHING_FREQ	Enable switching frequency ramping during startup
5	RESERVED	Reserved
4	RESERVED	Reserved
3	EN_ILIM_STARTUP	Enable current-limited start-up
2	EN_RAMP2	Enable ramp2 (3rd ramp), which is configured with PMBus® commands FREQUENCY_SWITCH2 and INTERLEAVE2
1	EN_PRIM_ISENSE	Enable both I_{SENSE} channels to support simultaneous primary and secondary current sense on a single-loop, single-phase topology
0	EN_DE_STARTUP	Enable diode emulation at start-up

Table 144 FW_CONFIG_REGULATION

Command code	Command name	Write Tx	Read Tx	Bytes	Format
C5h	FW_CONFIG_REGULATION	Block write	Block read	14	See Table 143

2.3 C6h FW_CONFIG_TELEMETRY

FW_CONFIG_TELEMETRY offers telemetry gain and offset correction. The definition, LSB and range of each parameter can be found in Table 145.

Table 145 FW_CONFIG_TELEMETRY data byte format

Bit	Field name	Meaning
31:28	READ_FAN_EXP	Exponent for READ_FAN
27:24	READ_FSW_EXP	Exponent for READ_FSW
23:20	READ_DUTY_EXP	Exponent for READ_DUTY
19:16	READ_IIN_EXP	Exponent for READ_IIN
15:12	READ_IOUT_EXP	Exponent for READ_IOUT
11:8	READ_VIN_EXP	Exponent for READ_VIN
7:6	Reserved	
5	IIN_ESTIMATE_EN	0: iin comes from hardware; 1: iin is estimated from POUT and VIN based on efficiency table
4	DISABLE_AUTOEXP	Disables autoexponent for pmbus read_x commands
3	Fw_Filter_En	Enables firmware filter for Read Telemetry from PMBUS
2:0	Read_power_exp	Exponent for READ_POUT and READ_PIN

Table 146 FW_CONFIG_TELEMETRY

Command code	Command name	Write Tx	Read Tx	Bytes	Format
C6h	FW_CONFIG_TELEMETRY	Block write	Block read	4	See Table 145

2.4 C7h MFR_FREQUENCY_DITHER

This feature is not implemented and is reserved for FW patch. FW example code is available and below is the description based on example code.

Table 147 FW_CONFIG_FAULTS data byte format

Bit	Field name	Meaning
7:4	step_rate	The number of 16 fsw units to wait between steps
3:0	percentage	Percentage of frequency to modulate between ±0-15%

When MFR_FREQUENCY_DITHER is set to a non-zero value, frequency dithering is enabled. The switching frequency will sweep within the percentage defined by bit [3:0], with 20 ns resolution per step; the duration of each step is defined by bit 7:4, (step_rate +1) *16*tsw.

Table 148 MFR_FREQUENCY_DITHER

Command code	Command name	Write Tx	Read Tx	Bytes	Format
C7h	MFR_FREQUENCY_DITHER	Write byte	Read byte	1	See Table 147

2.5 CAh MFR_IOUT_OC_FAST_FAULT_RESPONSE

The MFR_IOUT_OC_FAST_FAULT_RESPONSE command instructs the device to take a defined action in response to a fast output overcurrent fault (exceeding 0xD1 MFR_IOUT_OC_FAST_FAULT_LIMIT). Similar to the regular overcurrent protection, this protection is also based on output average current, but with no filter to the signal, so it can act faster.

Table 149 MFR_IOUT_OC_FAST_FAULT_RESPONSE data format

Bit	Meaning
7:6	Response: 00: Ignore 01: Continue operation for time specified by fwconfig variable delayed_shut_time_iout. If fault condition still present, shutdown and respond according to Retry Setting (bits [5:3]) 10: Shutdown and respond according to Retry Setting (bits [5:3]) 11: Device's output is disabled until fault no longer present
5:3	Retry setting: 000: No retry, remain disabled 001 to 110: Retry 1 to 6 times based on retry number 111: Retry continuously
2:0	Delay time for retry. Delay time in ms = Delay Time * Iout_Delay_Unit (configured by fw_config_faults_delay_unit_iout)

Table 150 MFR_IOUT_OC_FAST_FAULT_RESPONSE

Command code	Command name	Write Tx	Read Tx	Bytes	Format
CAh	MFR_IOUT_OC_FAST_FAULT_RESPONSE	Write byte	Read byte	1	See Table 149

2.6 CCh MFR_BOARD_TRIM

This feature is not implemented and is reserved for FW patch. FW example code is available and below is the description based on example code.

Table 151 MFR_BOARD_TRIM data byte format

Bit(s)	Field name	Meaning
15:11	mfr_lo_clk_trim_fine	U5.0
10:7	mfr_lo_clk_trim_coarse	S4.0, -12 to +10.5 MHz
6:1	mfr_vout_offset_trim	-40 to +38.75 mV LSB 1.25 mV, S6.0
0	trim_enable	Enable post-solder trimming

Table 152 MFR_BOARD_TRIM

Command code	Command name	Write Tx	Read Tx	Bytes	Format
CCh	MFR_BOARD_TRIM	Write word	Read word	2	See Table 151

2.7 CDh MFR_VRECT_SCALE

Scales the V_{RECT} input voltage computation using the resistor divider between V_{RECT} and VSEN1 or VSEN2 (per vsen_select).

For a secondary controller in an isolated converter, one way to sense input voltage is to sense the transformer secondary rectified voltage (V_{RECT}), and then calculate the primary voltage based on the transformer turns ratio. The V_{RECT} signal is scaled down by the resistor divider and fed to the VSEN1 or VSEN2 input.

The register has LSB 2^-16, range 0.0 to 0.99998.

For example, for the resistor divider ratio of 0.07, set MFR_VRECT_SCALE = 0.07 * 2^16 = 4588 (D) = 11EC (H). Writing `MFR_VRECT_SCALE` = 0x11EC sets the scale to 0.07.

D: Data in decimal

H: Data in hex

Table 153 MFR_VRECT_SCALE

Command code	Command name	Write Tx	Read Tx	Bytes	Format
CDh	`MFR_VRECT_SCALE`	Write word	Read word	2	Direct U0.16

2.8 CEh MFR_AHB_ADDRESS

This is used in conjunction with `MFR_REG_WRITE` and `MFR_REG_READ` PMBus® commands as the address pointer. It auto increments after each write/read.

2.9 CFh PWM_DEADTIME

The PWM dead time can be set by PMBus® command 0xCF `PWM_DEADTIME`. The dead times for PWM rise and fall edges can be set separately. The dead time resolution can be configured to 1.25 ns or 2.5 ns per deadtime_lsb_sel. The maximum dead time is 318.75 ns with 1.25 ns LSB and is 637.5 ns with 2.5 ns LSB.

Table 154 PWM_DEADTIME data byte format

Bit(s)	Field name	Meaning
127:120	PWM8_dr	Rising edge dead time deadtime_lsb_sel = 0: U6.2, LSB = 1.25 ns, 0 to 318.75 ns deadtime_lsb_sel = 1: LSB = 2.5 ns, 0 to 637.5 ns
119:112	PWM8_df	Falling edge dead time deadtime_lsb_sel = 0: U6.2, LSB = 1.25 ns, 0 to 318.75 ns deadtime_lsb_sel = 1: LSB = 2.5 ns, 0 to 637.5 ns
111:104	PWM7_dr	Rising edge dead time deadtime_lsb_sel = 0: U6.2, LSB = 1.25 ns, 0 to 318.75 ns deadtime_lsb_sel = 1: LSB = 2.5 ns, 0 to 637.5 ns
103:96	PWM7_df	Falling edge dead time deadtime_lsb_sel = 0: U6.2, LSB = 1.25 ns, 0 to 318.75 ns deadtime_lsb_sel = 1: LSB = 2.5 ns, 0 to 637.5 ns
95:88	PWM6_dr	Rising edge dead time

Bit(s)	Field name	Meaning
		deadtime_lsb_sel = 0: U6.2, LSB = 1.25 ns, 0 to 318.75 ns deadtime_lsb_sel = 1: LSB = 2.5 ns, 0 to 637.5 ns
87:80	PWM6_df	Falling edge dead time deadtime_lsb_sel = 0: U6.2, LSB = 1.25 ns, 0 to 318.75 ns deadtime_lsb_sel = 1: LSB = 2.5 ns, 0 to 637.5 ns
79:72	PWM5_dr	Rising edge dead time deadtime_lsb_sel = 0: U6.2, LSB = 1.25 ns, 0 to 318.75 ns deadtime_lsb_sel = 1: LSB = 2.5 ns, 0 to 637.5 ns
71:64	PWM5_df	Falling edge dead time deadtime_lsb_sel = 0: U6.2, LSB = 1.25 ns, 0 to 318.75 ns deadtime_lsb_sel = 1: LSB = 2.5 ns, 0 to 637.5 ns
63:56	PWM4_dr	Rising edge dead time deadtime_lsb_sel = 0: U6.2, LSB = 1.25 ns, 0 to 318.75 ns deadtime_lsb_sel = 1: LSB = 2.5 ns, 0 to 637.5 ns
55:48	PWM4_df	Falling edge dead time deadtime_lsb_sel = 0: U6.2, LSB = 1.25 ns, 0 to 318.75 ns deadtime_lsb_sel = 1: LSB = 2.5 ns, 0 to 637.5 ns
47:40	PWM3_dr	Rising edge dead time deadtime_lsb_sel = 0: U6.2, LSB = 1.25 ns, 0 to 318.75 ns deadtime_lsb_sel = 1: LSB = 2.5 ns, 0 to 637.5 ns
39:32	PWM3_df	Falling edge dead time deadtime_lsb_sel = 0: U6.2, LSB = 1.25 ns, 0 to 318.75 ns deadtime_lsb_sel = 1: LSB = 2.5 ns, 0 to 637.5 ns
31:24	PWM2_dr	Rising edge dead time deadtime_lsb_sel = 0: U6.2, LSB = 1.25 ns, 0 to 318.75 ns deadtime_lsb_sel = 1: LSB = 2.5 ns, 0 to 637.5 ns
23:16	PWM2_df	Falling edge dead time deadtime_lsb_sel = 0: U6.2, LSB = 1.25 ns, 0 to 318.75 ns deadtime_lsb_sel = 1: LSB = 2.5 ns, 0 to 637.5 ns
15:8	PWM1_dr	Rising edge dead time deadtime_lsb_sel = 0: U6.2, LSB = 1.25 ns, 0 to 318.75 ns deadtime_lsb_sel = 1: LSB = 2.5 ns, 0 to 637.5 ns
7:0	PWM1_df	Falling edge dead time deadtime_lsb_sel = 0: U6.2, LSB = 1.25 ns, 0 to 318.75 ns deadtime_lsb_sel = 1: LSB = 2.5 ns, 0 to 637.5 ns

Table 155 PWM_DEADTIME

Command code	Command name	Write Tx	Read Tx	Bytes	Format
CFh	PWM_DEADTIME	Block write	Block read	16	See Table 154

2.10 D0h MFR_PHASE1_INTERLEAVE

The MFR_PHASE1_INTERLEAVE command is used to config the phase shift of the phase associated with ramp 1 of an interleaved topology.

Table 156 MFR_PHASE1_INTERLEAVE command data byte

Byte	High byte		Low byte	
Bits	**7:4**	**3:0**	**7:4**	**3:0**
Contents	Not used	Group ID number	Number in group	Interleave order
Default value	00	00	00	00

If the Group ID number is zero, then Number in group and Interleave order number are zeroes and the programming of these numbers is disabled. If the Group ID number is non-zero, the user can set Number in group and Interleave order.

The phase shift (lag) is defined by: $360^\circ \times \frac{\text{Interleave_order}}{\text{Number_in_group}}$

Table 157 MFR_PHASE1_INTERLEAVE

Command code	Command name	Write Tx	Read Tx	Bytes
D0h	MFR_PHASE1_INTERLEAVE	Write word	Read word	2

2.11 D1h MFR_IOUT_OC_FAST_FAULT_LIMIT

This command defines the threshold of fast overcurrent protection. The fast overcurrent fault response is configured by PMBus® command 0xCA MFR_IOUT_OC_FAST_FAULT_RESPONSE. This command has two data bytes in the LINEAR11 data format.

Table 158 MFR_IOUT_OC_FAST_FAULT_LIMIT

Command code	Command name	Write Tx	Read Tx	Bytes	Range/ Res
D1h	MFR_IOUT_OC_FAST_FAULT_LIMIT	Write word	Read word	2	U9.1, U8.2, U7.3, U6.4

2.12 D2h MFR_PHASE1_IOUT_CAL_OFFSET

The MFR_PHASE1_IOUT_CAL_OFFSET is used to null out any offsets in the output current sensing circuit connected to ISEN2. This command has two data bytes in the LINEAR11 data format.

Table 159 MFR_PHASE1_IOUT_CAL_OFFSET

Command code	Command name	Write Tx	Read Tx	Bytes	Range/ Res
D2h	MFR_PHASE1_IOUT_CAL_OFFSET	Write word	Read word	2	S7.4

2.13 D3h MFR_PHASE1_IOUT_APC

Current sense amperes per code, used to map the current sense ADC LSB into Amperes. Direct U1.11 format amps/code unit. The calculation of MFR_PHASE1_IOUT_APC is shown below. Where R_{ISNE2} is the equivalent ISEN2 sense resistance including any external sense gain.

MFR_PHASE1_IOUT_APC = 1 mV/R_{ISNS2}

Table 160 MFR_PHASE1_IOUT_APC

Command code	Command name	Write Tx	Read Tx	Bytes	Format
D3h	MFR_PHASE1_IOUT_APC	Write word	Read word	2	Direct U1.11

2.14 D4h MFR_FW_CONFIG_UART

Bits[31:0] is the control parameter that specifies the operation parameter values. Details see Table 161.

Bits[63:32] is the optional arg parameter used to specify the baudrate, transmit and receive enables.

Table 161 MFR_FW_CONFIG_UART data byte format

Bit(s)	Field name	Meaning
8:0	Mode and miscellaneous controls	0x01=asynchronous mode(arg=baudrate), 0x0F=transmit enable/disable(arg=1/0), 0x10=receive enable/disable(arg=1/0), 0x1A=abort transfer
11:9	Data bits	0x00=8-bit data, 0x05=5-bit data, 0x06=6-bit data, 0x07=7-bit data
13:12	Parity	0x00=none, 0x01=even, 0x02=odd
15:14	Stop bits	0x00=1 bit, 0x01=2 bits
26:23	TX/RX FIFO interrupt trigger level	0x00=1/8, 0x01=1/4, 0x02=1/2, 0x03=3/4, 0x04=7/8

Table 162 MFR_FW_CONFIG_UART

Command code	Command name	Write Tx	Read Tx	Bytes	Format
D4h	MFR_FW_CONFIG_UART	Block write	Block read	8	

2.15 D5h MFR_SS_RAMP_FSW

This feature is not implemented and is reserved for FW patch. FW example code is available and below is the description based on example code.

Table 163 MFR_SS_RAMP_FSW data byte format

Bit(s)	Field name	Meaning
7:1	reserved	Reserved
0	enable_pcmc_fsw_ramp	When 1 enables peak current mode control (PCMC) f_{sw} ramp on start-up

Table 164 MFR_SS_RAMP_FSW

Command code	Command name	Write Tx	Read Tx	Bytes	Format
D5h	MFR_SS_RAMP_FSW	Write byte	Read byte	1	See Table 163

2.16 D6h PWM_DEADTIME_ADJUSTMENT

This feature is not implemented and is reserved for FW patch. This command defines another set of dead-time which allows the control loop to choose based on load current. Use command E4h to set the current threshold.

Table 165 PWM_DEADTIME_ADJUSTMENT

Command code	Command name	Write Tx	Read Tx	Bytes	Format
D6h	PWM_DEADTIME_ADJUSTMENT	Block write	Block read	16	See Table 154

2.17 D7h MFR_COMMON_FAULT_STATUS2

Common fault status2 command.

Table 166 MFR_COMMON_FAULT_STATUS2 data byte format

Bit(s)	Meaning
31:7	reserved
10	POR VDDA fault
8	LLC burst fault
7	LLC open fault
6	Vout open sense fault (PID duty cycle detection method)
5	ISEN2 peak current limit (PCL) fault
4	ISEN1 peak current limit (PCL) fault
3	Flux balance fault
2	ISEN2 tracking fault
1	ISEN1 tracking fault
0	Unknown HW fault

Table 167 MFR_COMMON_FAULT_STATUS2

Command code	Command name	Write Tx	Read Tx	Bytes	Format
D7h	MFR_COMMON_FAULT_STATUS2	–	Block read	4	See Table 166

2.18 D8h FREQUENCY_SWITCH2

The FREQUENCY_SWITCH2 command sets the switching frequency in kHz for ramp2. The ramp2 is enabled by PMBus® command FW_CONFIG_REGULATION, bit [2] for EN_RAMP2. This command has two data bytes in the LINEAR11 data format. The switching frequency can be set in range 50 kHz to 2 MHz, with switching period resolution of 5 ns.

Table 168 FREQUENCY_SWITCH2

Command code	Command name	Write Tx	Read Tx	Bytes	Format
D8h	FREQUENCY_SWITCH2	Write word	Read word	2	U11.-1, U10.0, U9.1

2.19 D9h INTERLEAVE2

The INTERLEAVE2 command is used to config the phase shift of ramp 2.

Table 169 INTERLEAVE2 command data byte

Byte	High byte		Low byte	
Bits	**7:4**	**3:0**	**7:4**	**3:0**
Contents	Not used	Group ID number	Number in group	Interleave order
Default value	00	00	00	00

If the Group ID number is zero, then Number in group and Interleave order number are zeroes and the programming of these numbers is disabled. If the Group ID number is non-zero, the user can set Number in group and Interleave order.

The phase shift (lag) is defined by: $360^\circ \times \frac{\text{Interleave_order}}{\text{Number_in_group}}$

Table 170 INTERLEAVE2

Command code	Command name	Write Tx	Read Tx	Bytes
D9h	INTERLEAVE2	Write word	Read word	2

2.20 DAh MFR_ISHARE_THRESHOLD

The current sharing dead-zone in LINEAR11 format. Unit is in amperes.

Table 171 MFR_ISHARE_THRESHOLD

Command code	Command name	Write Tx	Read Tx	Bytes	Format
DAh	MFR_ISHARE_THRESHOLD	Write word	Read word	2	U9.1, U8.2, U7.3, U6.4

2.21 DCh MFR_SELECT_TEMPERATURE_SENSOR

Use MFR_SELECT_TEMPERATURE_SENSOR to configure the temperature sensor.

Table 172 MFR_SELECT_TEMPERATURE_SENSOR data byte format

Bit(s)	Field name	Meaning
3:2	TSEN sensor type	0: 2 series diodes 1: NTC 2: PTC
1	Temperature fault source	0: TSEN 1: Internal
0	READ_TEMPERATURE_1, READ_TEMPERATURE_2 source	0: TSEN, Internal 1: Internal, TSEN

Table 173 MFR_SELECT_TEMPERATURE_SENSOR

Command code	Command name	Write Tx	Read Tx	Bytes	Format
DCh	MFR_SELECT_TEMPERATURE_SENSOR	Write byte	Read byte	1	See Table 172

2.22 DEh MFR_REG_WRITE

Data to be written to register. Used in conjunction with address provided in MFR_AHB_ADDRESS for AHB write. The register address is typically written to CEh MFR_AHB_ADDRESS command first, and then new register data can be written to DEh MFR_REG_WRITE command.

Table 174 MFR_REG_WRITE

Command code	Command name	Write Tx	Read Tx	Bytes	Format
DEh	MFR_REG_WRITE	Block Write	–	4	

2.23 DFh MFR_REG_READ

Read register data. Used in conjunction with address provided in MFR_AHB_ADDRESS for AHB read. The register address is typically written to CEh MFR_AHB_ADDRESS command first, and then the register data can be read from DFh MFR_REG_READ command.

Table 175 MFR_REG_READ

Command code	Command name	Write Tx	Read Tx	Bytes	Format
DFh	MFR_REG_READ	–	Block read	4	

2.24 E4h FW_CONFIG_DEADTIME_ADJUSMENT_THRESHOLD

The current threshold in S9.2 amperes format at above which we use PWM_DEADTIME_ADJUSTMENT instead of PWM_DEADTIME. Set threshold to 0 to disable the feature. This feature is not implemented and is reserved for FW patch.

Table 176 FW_CONFIG_DEADTIME_ADJUSMENT_THRESHOLD

Command code	Command name	Write Tx	Read Tx	Bytes	Format
E4h	FW_CONFIG_DEADTIME_ADJUSMENT_THRESHOLD	Write word	Read word	2	S9.2

2.25 E5h MFR_TRANSFORMER_SCALE

Defines the transformer turns ratio, $N_{turn_sec}/N_{turn_prim}$.

Table 177 MFR_TRANSFORMER_SCALE

Command code	Command name	Write Tx	Read Tx	Bytes	Format
E5h	MFR_TRANSFORMER_SCALE	Write word	Read word	2	Direct U2.14

2.26 E8h MFR_COMMON_FAULT_STATUS1

Common fault status1 command.

Table 178 MFR_COMMON_FAULT_STATUS1 data byte format

Bit(s)	Meaning
31:4	reserved
4	VDD UVLO
3	Invalidated corrupt snapshot image
2	External fault
1	ISEN2 short circuit protection (SCP) fault
0	ISEN1 short circuit protection (SCP) fault

Table 179 MFR_COMMON_FAULT_STATUS1

Command code	Command name	Write Tx	Read Tx	Bytes	Format
E8h	MFR_COMMON_FAULT_STATUS1	–	Block read	4	See Table 178

2.27 EAh MFR_IOUT_APC

Current sense amperes per code, used to map the current sense ADC LSB into Amperes. Direct U1.11 format amps/code unit. The calculation of MFR_IOUT_APC is shown below. Where R_{ISNE1} is the equivalent ISEN1 sense resistance including any external sense gain.

$$MFR_IOUT_APC = 1\ mV/R_{ISNS1}$$

Table 180 MFR_IOUT_APC

Command code	Command name	Write Tx	Read Tx	Bytes	Format
EAh	MFR_IOUT_APC	Write word	Read word	2	Direct U1.11

2.28 EBh MFR_MIN_PW

MFR_MIN_PW defines the minimum primary PWM pulse width, which sets register ramp_pw_min (U8.0). LSB is 5 ns. The maximum value is 255, corresponding to 1275 ns.

Table 181 MFR_MIN_PW

Command code	Command name	Write Tx	Read Tx	Bytes	Format
EBh	MFR_MIN_PW	Write byte	Read byte	1	U8.0

2.29 EDh MFR_SCP_FAULT_RESPONSE

The MFR_SCP_FAULT_RESPONSE command instructs the device to take a defined action in response to a short circuit fault (current exceeding isp_scp_thresh). This is a voltage type response. This command returns one data byte with contents as follows:

Table 182 MFR_SCP_FAULT_RESPONSE data format

Bit	Meaning
7:6	Response: 00: Ignore 01: Continue operation for the delay time specified by fwconfig variable delayed_shut_time_iout. If the fault condition is still present at the end of the delay time, respond according to Retry Setting (bits [5:3]) 10: Disable and retry according to Retry Setting (bits [5:3]) 11: Device's output is disabled until fault no longer present
5:3	Retry setting: 000: No retry 001 to 110: Retry 1 to 6 times based on retry number 111: Retry continuously
2:0	Delay time for retry. Delay time in ms = Delay Time * Iout_Delay_Unit (configured by fw_config_faults_delay_unit_iout)

Table 183 MFR_SCP_FAULT_RESPONSE

Command code	Command name	Write Tx	Read Tx	Bytes	Format
EDh	MFR_SCP_FAULT_RESPONSE	Write byte	Read byte	1	See Table 182

2.30 F0h MFR_DEBUG_BUFF

The first read after reset will always be all 0s. When the buffer is empty, will read all 0xEE.

Table 184 MFR_DEBUG_BUFF data byte format

Bit(s)	Field name	Meaning
63:56	overwrite_flag	If 1, will overwrite old log data when buffer is full; default is 0
55:48	unread logs	Number of unread logs
47:40	write index	Index of next log position to write
39:32	read index	Index of next log position to read
31:16	PC	Bits [17:2] of microcontroller program counter value when error is reported

Bit(s)	Field name	Meaning
15:8	error type	Low-level cause of the error (see table from FW documentation)
7:0	error source	Where in the firmware the error is reported (see table from FW documentation)

Table 185 MFR_DEBUG_BUFF

Command code	Command name	Write Tx	Read Tx	Bytes	Format
F0h	MFR_DEBUG_BUFF	–	Block read	8	See Table 184

2.31 F1h MFR_SETUP_PASSWORD

The user can set up a password with MFR_SETUP_PASSWORD command to protect selected PMBus® commands that are defined by 0xF4 and 0xF5 security masks. A write is a new password (6 bytes); if this command was protected it will ignore write use MFR_SECURITY_BIT_MASK_HIGH to protect this after setup. The length of password can vary by user selection in spreadsheet, but the hash will be 6 bytes.

Table 186 MFR_SETUP_PASSWORD

Command code	Command name	Write Tx	Read Tx	Bytes
F1h	MFR_SETUP_PASSWORD	Block write	Block read	6

2.32 F2h MFR_DISABLE_SECURITY_ONCE

This is the PMBus® command for password entry. It has a limit of four attempts before lockup. A read returns 0x000000000000 if security is off; 0x000000000001 if security is on; 0x000000000002 if security setup is locked due to incorrect password entry.

Read MFR_DISABLE_SECURITY_ONCE, if it returns 0x000000000000, the user can use MFR_SETUP_PASSWORD to set up a new password. If it returns 0x000000000001, the user has to write the correct password here to turn off the security. Read MFR_DISABLE_SECURITY_ONCE after writing the correct password, and it should return 0x000000000000 indicating that the security is turned off.

Table 187 MFR_DISABLE_SECURITY_ONCE

Command code	Command name	Write Tx	Read Tx	Bytes
F2h	MFR_DISABLE_SECURITY_ONCE	Block write	Block read	6

Once the security is turned on, use commands 0xF4 MFR_SECURITY_BIT_MASK_LOW and 0xF5 MFR_SECURITY_BIT_MASK_HIGH to set the security masks of 255 PMBus® commands.

2.33 F4h MFR_SECURITY_BIT_MASK_LOW

0xF4 MFR_SECURITY_BIT_MASK_LOW mask bits for command numbers 0 to 127. A 1 in the bit position indicates that the respective PMBus® is protected, while 0 indicates it's unprotected. The protected command does not allow write action.

Table 188 MFR_SECURITY_BIT_MASK_LOW

Command code	Command name	Write Tx	Read Tx	Bytes
F4h	MFR_SECURITY_BIT_MASK_LOW	Block write	Block read	16

2.34 F5h MFR_SECURITY_BIT_MASK_HIGH

0xF5 MFR_SECURITY_BIT_MASK_HIGH mask bits for command numbers 128 to 255. A 1 in the bit position indicates that the respective PMBus® is protected, while 0 indicates it's unprotected. The protected command does not allow write action.

Table 189 MFR_SECURITY_BIT_MASK_HIGH

Command code	Command name	Write Tx	Read Tx	Bytes
F5h	MFR_SECURITY_BIT_MASK_HIGH	Block write	Block read	16

2.35 FCh MFR_ADDED_DROOP_DURING_RAMP

This is not implemented and reserved for FW patch. This command sets the added droop resistance for start-up ramp. LINEAR11 format.

Table 190 MFR_ADDED_DROOP_DURING_RAMP

Command code	Command name	Write Tx	Read Tx	Bytes	Format
FCh	MFR_ADDED_DROOP_DURING_RAMP	Write word	Read word	2	U8.-2, U9.-1, U10.0, U9.1, U8.2, U7.3, U6.4, U5.5, U4.6, U3.7, U2.8

2.36 FDh MFR_FIRMWARE_COMMAND_DATA

The MFR_FIRMWARE_COMMAND_DATA works together with command 0xFE MFR_FIRMWARE_COMMAND. In Table 191 the value corresponds to each configuration of MFR_FIRMWARE_COMMAND, and input data defines the value that needs to be written prior to writing the MFR_FIRMWARE_COMMAND; output data is the result or output status after writing MFR_FIRMWARE_COMMAND.

Table 191 MFR_FIRMWARE_COMMAND_DATA

Value	Name	Input data write to MFR_FIRMWARE_COMMAND_DATA	Output data read from MFR_FIRMWARE_COMMAND_DATA
0x0	NOP	–	–
0x1	FIRMWARE_VERSION	–	Returns 32bit UTC date timestamp version, if patch is loaded this will change to patch UTC, otherwise will return ROM UTC. See FW documentation for UTC definition
0x2	RESTORE_PMBUS_FROM_SCRATCHPAD	–	Status: 0 good, 1 = crc failure
0x3	STORE_TRIM	–	–
0x4	STORE_CONFIG	xvalent number between 0 – 15	–

Value	Name	Input data write to MFR_FIRMWARE_COMMAND_DATA	Output data read from MFR_FIRMWARE_COMMAND_DATA
0x5	CONFIGURATOR_STATUS_GET	0: get configurator status 1: get configurator error	Status: 0 sucess, !=0: failure code see configurator documentation for error codes, 1=busy
0x6	STORE_FW_PATCH	[0:10]: number of bytes in buffer to store in OTP max of 1024 [11:15] reserved [16:19]: is_header: if this is the first 1k chunk of patch set to 1 otherwise set to 0 [20:23] reserved [24:31]: otp partition see Otp_Partition_Selector_t for details, should be number between 0-15	Status: 0 sucess, !=0 : failure to store
0x7	RESTORE_TRIM	–	–
0x8	RESTORE_CONFIG	–	–
0x9	Reserved	–	–
0xa	Reserved	–	–
0xb	Reserved	–	–
0xc	RESTORE_CONFIG_FROM_SCRATCHPAD	–	Error status, 0= good, non-zero failed to restore
0xd	STORE_PMBUS_TO_SCRATCHPAD	[15:8]: 1=PMBus_Default, 0=PMBus_User [7:0]: xvalent value	–
0xe	SYSTEM_RESET	–	–
0xf	DISABLE_I2C_BUS	0: enable, 1: disable	–
0x10	CONFIGURATOR_REMAINING_SIZE	[24-31]: OTP partition, see Otp_Partition_Selector_t for details, should be a number between 0 and 15	Size in bytes
0x11	OTP_FS_COMMAND_STORE	[0:10]: number of bytes in buffer to store in OTP max of 1024 [11:15] reserved [16:19]: reserved [20:23] reserved [24:31]: otp partition see Otp_Partition_Selector_t for details, should be number between 0-15	Status
0x12	OTP_FS_INVALIDATE	[0:7]: file system image type see Otp_File_System_Cmd_Types_t	Status

Value	Name	Input data write to MFR_FIRMWARE_COMMAND_DATA	Output data read from MFR_FIRMWARE_COMMAND_DATA
		[8:15]: xvalent number 0-15 [16:23] reserved [24:31] otp partition see Otp_Partition_Selector_t for details should be number between 0-17; If xv=0xFE or cmd_type=0xFE, will match all xv or cmd_type values	
0x13	TRIM_PROTECT	0: disable protect, !=0: enable protect	–
0x14	STORE_PARTIAL_CONFIG	[7:0] xvalent [23:8] size [31:24] reserved	–
0x15	RESTORE_PARTIAL_CONFIG	–	–
0x16	EXECUTE_PATCH_FROM_RAM	–	–
0x17	Reserved	–	–
0x18	FORCE_FIRMWARE_FAULTS	Forces firmware faults 32 possible options, see firmware docs for bit definitions	–
0x19	CLEAR_FIRMWARE_FAULTS	Clears status of firmware fault types 32 options, see firmware docs for bit definitions	–
0x1A	reserved	–	–
0x1B	reserved	–	–
0x1C	reserved	–	–
0x1D	FW_CONFIG_UPDATED	–	–
0x1E	reserved	–	–
0x1F	reserved	–	–
0x20	reserved	–	–
0x21	reserved	–	–
0x22	PROTECT_PMBUS_MASK0	32bit write protection mask of pmbus commands 0-31	–
0x23	PROTECT_PMBUS_MASK1	32bit write protection mask of pmbus commands 32-63	–
0x24	PROTECT_PMBUS_MASK2	32bit write protection mask of pmbus commands 64-95	–
0x25	PROTECT_PMBUS_MASK3	32bit write protection mask of pmbus commands 96-127	–
0x26	PROTECT_PMBUS_MASK4	32bit write protection mask of pmbus commands 128-159	–

Value	Name	Input data write to MFR_FIRMWARE_COMMAND_DATA	Output data read from MFR_FIRMWARE_COMMAND_DATA
0x27	PROTECT_PMBUS_MASK5	32bit write protection mask of pmbus commands 160-191	–
0x28	PROTECT_PMBUS_MASK6	32bit write protection mask of pmbus commands 192-223	–
0x29	PROTECT_PMBUS_MASK7	32bit write protection mask of pmbus commands 224-255	–
0x2A	reserved	–	–
0x2B	reserved	–	–
0x2C	reserved	–	–
0x2D	CALCULATE_CRC	0 = calculate the total CRC of all data image and all xvalent numbers skipping trim, patches and structure types, result is sum of header CRC + data CRC [0:7]: file system image type see Otp_File_System_Cmd_Types_t; if image type is partial, will calculate CRC of data CRC of all matching images because partial sequence matters [8:15]: xvalent number 0-15 [16:23] reserved [24:31] otp partition see Otp_Partition_Selector_t for details should be number between 0-17; if xv=0xFE or cmd_type=0xFE, will match all xv or cmd_type values and calculate total CRC	If [0:7] image type is partials, return CRC of data CRCs; if image type = 0xFE or xv=0xFE, return the sum of header and data CRC of matching files; if both image type and xv are used for a specific non-partial image file, return its data CRC; return 0xFFFFFFFF if error
0x2E	GET_FW_ADDRESS	0: OTP_DATA 1: HW_CONFIG_BASE 2: SCRATCHPAD 3: FW_TRIM_BASE 4: FW_CONFIG_BASE 5: BOOT_DESCRIPTOR 6: REGULATION_APP 7: TELEM_DATA 8: PMBUS_ADDRESSING 9: pmbus_drv_state 10: ON_OFF_STATE 11: PS_SETTINGS 12: Gamer_Data	Address of corresponding variable or structure; 0xFFFFFFFF if variable id is invalid

Value	Name	Input data write to MFR_FIRMWARE_COMMAND_DATA	Output data read from MFR_FIRMWARE_COMMAND_DATA
		13: FAULTS_ARRAY 14: FAULTS_CNT_ARRAY 15: configurator_status 16: configurator_error	
0x2F	reserved	–	–
0x30	ENTER_TRIM_PASSWORD	Trim protection key	–
0x31	FAULT_TYPE_SHUTDOWN	–	Return the type of fault which shutdown the loop
0x32	FAULT_TYPE_SHUTDOWN_COMMON	–	Return the type of common fault which shutdown both loops
0x33	RESERVED	–	–
0x34	RESERVED	–	–
0x35	GET_PATCH_VERSION	Input data is patch partition number; first patch partition starts from 1; for rom_image use 0	Returns the version timestamp of an actively loaded patch for a partition; if no active patch is loaded, returns -1
0x36	SNAPSHOT_READ_ADDRESS	–	Returns the address of selected image. USE MFR_AHB_ADDRESS and MFR_AHB_READ to read snapshot data. The number of image is selected by SNAPSHOT_IMAGE_SELECTOR
0x37	SNAPSHOT_READ_LATEST_FROM_RAM_ADDRESS	–	Returns the RAM address of captured snapshot. Use MFR_AHB_ADRESS and MFR_AHB_READ to get the data
0x38	SNAPSHOT_STORE	–	Stores a snapshot image buffer to otp. Snapshot data needs to be sampled into snapshot buffer by SNAPSHOT_RECORD first. Requires a patch to be loaded. returns 0: N/A 1: called configurator snapshot store 2: snapshot not enabled 3: snapshot data or size not initialized (need a patch to be stored)
0x39	SNAPSHOT_IMAGE_SELECTOR	Sets the image number to read. Used by SNAPSHOT_READ_ADDRESS	–

Value	Name	Input data write to MFR_FIRMWARE_COMMAND_DATA	Output data read from MFR_FIRMWARE_COMMAND_DATA
0x3A	SNAPSHOT_IMAGE_INVALIDATE	Invalidates the image selected by input data	–
0x3B	READ_SNAPSHOT_STORE_OFFSET	–	For debug. Returns the offset of otp partition the next snapshot to be stored at. 0xFFFFFFFF means snapshot is not initialized, need to write FW_CONFIG_UPDATED 0x00 means snapshot is ready
0x3C	READ_SNAPSHOT_IMAGE_COUNT	–	For debug. Returns the count of otp images found in snapshot partition. 0xFFFFFFFF means snapshot is not initialized, need to write FW_CONFIG_UPDATED 0x00 means snapshot is ready
0x3D	SNAPSHOT_RECORD	–	Samples a snapshot image into snapshot buffer in RAM. It can be read by MFR_AHB_ADDRESS and MFR_AHB_READ. Address can be read by SNAPSHOT_READ_LATEST_FROM_RAM_ADDRESS. After sampling the Snapshot buffer can be stored to otp by SNAPSHOT_STORE. Requires a patch to be loaded. Returns 0: N/A 1: called configurator snapshot record 2: snapshot not enabled 3: snapshot data or size not initialized (need a patch to be stored) 4: snapshot record function not defined (requires a patch to be stored)
0x3E	TICK_SINCE_BOOT	–	Returns tick counter since boot
0x40	SPI_INITIALIZE	–	Driver status 0: DRIVER_OK, 1: DRIVER_ERROR, 2: DRIVER_ERROR_BUSY, 3: DRIVER_ERROR_TIMEOUT,

Value	Name	Input data write to MFR_FIRMWARE_COMMAND_DATA	Output data read from MFR_FIRMWARE_COMMAND_DATA
			4: RIVER_ERROR_UNSUPPORTED, 5: DRIVER_ERROR_PARAMETER, 6: DRIVER_ERROR_SPECIFIC
0x41	SPI_UNINITIALIZE	–	Driver status
0x42	SPI_POWER_CONTROL_FULL	–	Driver status
0x43	SPI_POWER_CONTROL_OFF	–	Driver status
0x44	SPI_CONTROL	Bits [31:21] is the optional arg parameter used to specify the speed index (0x0: Fixed to 1 MHz, 0x1: 2MHz, 0x2: 5 MHz) Bits [21:0] is the control parameter that specifies the operation parameter value. Details see fw_config.	Driver status
0x45	SPI_TRANSFER	Bits [31:0] is the number of bytes to be transferred	Driver status
0x46	SPI_SEND	Bits [31:0] is the number of bytes to be sent	Driver status
0x47	SPI_RECEIVE	Bits [31:0] is the number of bytes to be received	Driver status
0x48	SPI_GET_DATA_COUNT	–	Driver status
0x49	SPI_GET_STATUS	–	Driver status
0x4A	SPI_GET_EVENT	–	Event status 0: No event happened 1: Send completed 2: Received completed 4: Transfer completed 64: Receive overrun (ROR)
0x4B	SPI_SET_LOOPBACK_MODE	–	–

Table 192 MFR_FIRMWARE_COMMAND_DATA

Command code	Command name	Write Tx	Read Tx	Bytes
FDh	MFR_FIRMWARE_COMMAND_DATA	Block write	Block read	4

2.37 FEh MFR_FIRMWARE_COMMAND

MFR_FIRMWARE_COMMAND protocol always involves a block write to MFR_FIRMWARE_COMMAND_DATA (0xFD) then a byte write to MFR_FIRMWARE_COMMAND (0xFE) then a block read of MFR_FIRMWARE_COMMAND_DATA (0xFE). The Table 191 describes all the commands in this extended command protocol set. Note that none of these commands have OTP storage.

Table 193 MFR_FIRMWARE_COMMAND

Command code	Command name	Write Tx	Read Tx	Bytes
FEh	MFR_FIRMWARE_COMMAND	Write byte	–	1

2.38 Firmware patched command

Customizing PMBus® commands to meet specific needs is made easy with this device. Users can implement a firmware patch to add new commands for tailored features or redefine existing MFR commands for alternative uses. The command_config excel file clearly indicates which commands are reserved and available for customization. The patched MFR commands offer enhanced functionality, including block write and block read capabilities that support up to 31 bytes of data per command.

3 Reserved and pre-assigned address

Some addresses are reserved for system management bus (SMBus). It is best to assign addresses that are open for use to the controller, as listed in Table 194, to avoid potential conflict.

Table 194 Reserved and open-for-use SMBus addressses

Address	Description
0x00	General call and start byte
0x01	CBUS address
0x02 to 0x0B	Reserved
0x0C	Alert response address
0x0D to 0x27	Open for use
0x28	Zone read
0x29 to 0x2B	Open for use
0x2C, 0x2D	Reserved
0x2E to 0x36	Open for use
0x37	Zone write
0x38 to 0x3F	Open for use
0x40 to 0x43	Reserved by previous versions of the SMBus specification for PCMCIA socket controllers (4 addresses)
0x44	Reserved
0x45 to 0x47	Open for use
0x48 to 0x4B	Prototype address
0x4C to 0x60	Open for use
0x61	SMBus device default address
0x62 to 0x77	Open for use
0x78 to 0x7B	10-bit slave address
0x7C to 0x7F	Reserved

4 Numerical format

4.1 Definition of numerical formats

Numbers are often referred to as having the form of Ux.y for unsigned numbers or Sx.y for signed numbers. For instance, U3.7 or S12.3. The definition is given below.

Ux.y indicates an unsigned number, with “x” indicating the bit position of the MSB and “y” indicating the bit position of the LSB, each relative to the binary point. Sx.y indicates a signed number in two’s compliment format with “x” and “y” defined as described above for the unsigned case.

- S=signed
- U=unsigned
- . = binary point

Some unsigned and signed number examples are given below.

- **S12.3** is a 15-bit signed number with 12 bits to the left of the binary point (MSB weight 2^{11}) and 3 bits to the right of the binary point (LSB weight 2^{-3}). Bit[14] is the sign bit. Range is -2^{11} to $(2^{14}-1)*2^{-3}$ = -2048 to 2047.875.
- **U3.7** is a 10-bit unsigned number with 3 bits to the left of the binary point (MSB weight 2^{2}) and 7 bits to the right of the binary point (LSB weight 2^{-7}). Range is 0 to $(2^{10}-1)*2^{-7}$ = 0 to 7.9921875.
- **U11.-1** is a 10-bit unsigned number with all bits to the left of the binary point. The MSB is 11 bits to the left of the binary point (MSB weight 2^{10}) and the LSB is offset by 1 bit to the left of the binary point (LSB weight 2^{1}). Range is 0 to $(2^{10}-1)*2^{1}$ = 0 to 2046.

4.2 Linear11 format

The Linear11 format is a 16-bit number that consists of an 11-bit mantissa and a 5-bit exponent.

In binary format, a Linear11 nubmer appears as EEEEEMMMMMMMMMM. Both mantissa and exponent are in two’s compliment format. Some commands have limited range and do not use all the possible bits.

For example, the command `POUT_OP_WARN_LIMIT` allowed format is Linear11 with U10.0, U11.-1, or U12.-2.

This means that the exponent is 0, -1 or -2 and mantissa uses 10-bit (10+0 bits, or 11+(-1) = 10 bits, or 12+(-2) = 10 bits). The range can be 2^{10} -1 = 1023 when exponent is 0 (LSB = 1). And 2046 when exponent is -1 (LSB = 2), or 4092 when exponent is -2.

4.3 PMBus® format options

Some commands have Range/Res in the format column. This means that the range and resolution can be different depending on the numerical format used. For example, command code 4Ah:

Command code	Command name	Write Tx	Read Tx	Bytes	Range/ Res.
4Ah	`IOUT_OC_WARN_LIMIT`	Write word	Read word	2	U9.1, U8.2, U7.3, U6.4

The valid data is in format U9.1, U8.2, U7.3, or U6.4.

U9.1 has LSB of 2^{-1} = 0.5 and the range is 0 to 511.5. U6.4 has LSB of 2^{-4} = 0.0625A and the range is 0 to 63.9375.

Some commands only accept specific values as listed in the valid data column. For example, command code 01h:

Command code	Command name	Write Tx	Read Tx	Bytes	Valid data
01h	OPERATION	Write byte	Read byte	1	0x00, 0x40, 0x80, 0x82, 0x94, 0x98, 0xA4, 0xA8

In this example, only values of 0x00, 0x40, 0x80, 0x82, 0x94, 0x98, 0xA4, 0xA8 are accepted.

5 Related resources

- XDP™ digital power controllers
- XDPP1140-100B
- XDPP1148-100B
- XDPP1140-100C
- XDPP1148-100C
- XDPP1188-200C
- EVAL_XDPP1140_DB
- EVAL_XDPP1148_DB
- EVAL_XDPP1140_FBFB_50V
- REF_IBC_1600W_GAN
- REF_LLC_500W_FULLGAN
- XDP™ Designer GUI installation utility

Revision history

Document revision	Date	Description of changes
V 1.0	2024-03-19	Initial release
V 1.1	2024-03-28	Format updated
V 1.2	2025-01-29	Updated description of commands D6h [2.16] and E4h [2.24].
V 1.3	2025-09-08	Corrected the typo of command code number in Table 140 to “B0h”, in Table 176 to “E4h”, in Table 193 to “FEh”. Added chapter 2.38, brief introduction of patched command. Added comment to command “D6h” and “E4h”, both are reserved for FW patch.
V 1.4	2025-12-19	Added XDPP1188. Corrected typo in Table 146: “Bytes”, Table 148: “Wrtie Tx”, “Read Tx”. Updated Table 40, Table 45, Table 48, Table 51, Table 55, Table 58, Table 63, Table 66, Table 71, Table 74, Table 82, Table 149, Table 154, Table 156, Table 167, Table 182, Table 185. Updated description sections 2.27, 2.28, 4.1, 4.2, 4.3, chapter 5
V 1.5	2026-03-18	Fixed typo in 2.22 MFR_REG_WRITE and 2.23 MFR_REG_READ

Trademarks
All referenced product or service names and trademarks are the property of their respective owners.

Edition 2026-03-18
Published by

Am Campeon 1-15
85579 Neubiberg
Germany

© 2026 Infineon Technologies AG. All Rights Reserved.

Do you have a question about this document?

Email:

erratum@infineon.com

UM211449

Important Notice

Products which may also include samples and may be comprised of hardware or software or both ("Product(s)") are sold or provided and delivered by Infineon Technologies AG and its affiliates ("Infineon") subject to the terms and conditions of the frame supply contract or other written agreement(s) executed by a customer and Infineon or, in the absence of the foregoing, the applicable Sales Conditions of Infineon. General terms and conditions of a customer or deviations from applicable Sales Conditions of Infineon shall only be binding for Infineon if and to the extent Infineon has given its express written consent.

For the avoidance of doubt, Infineon disclaims all warranties of non-infringement of third-party rights and implied warranties such as warranties of fitness for a specific use/purpose or merchantability.

Infineon shall not be responsible for any information with respect to samples, the application or customer's specific use of any Product or for any examples or typical values given in this document.

The data contained in this document is exclusively intended for technically qualified and skilled customer representatives. It is the responsibility of the customer to evaluate the suitability of the Product for the intended application and the customer's specific use and to verify all relevant technical data contained in this document in the intended application and the customer's specific use. The customer is responsible for properly designing, programming, and testing the functionality and safety of the intended application, as well as complying with any legal requirements related to its use.

Unless otherwise explicitly approved by Infineon, Products may not be used in any application where a failure of the Products or any consequences of the use thereof can reasonably be expected to result in personal injury. However, the foregoing shall not prevent the customer from using any Product in such fields of use that Infineon has explicitly designed and sold it for, provided that the overall responsibility for the application lies with the customer.

Infineon expressly reserves the right to use its content for commercial text and data mining (TDM) according to applicable laws, e.g. Section 44b of the German Copyright Act (UrhG).If the Product includes security features:

Because no computing device can be absolutely secure, and despite security measures implemented in the Product, Infineon does not guarantee that the Product will be free from intrusion, data theft or loss, or other breaches ("Security Breaches"), and Infineon shall have no liability arising out of any Security Breaches.

If this document includes or references software:

The software is owned by Infineon under the intellectual property laws and treaties of the United States, Germany, and other countries worldwide. All rights reserved. Therefore, you may use the software only as provided in the software license agreement accompanying the software.

If no software license agreement applies, Infineon hereby grants you a personal, non-exclusive, non-transferable license (without the right to sublicense) under its intellectual property rights in the software (a) for software provided in source code form, to modify and reproduce the software solely for use with Infineon hardware products, only internally within your organization, and (b) to distribute the software in binary code form externally to end users, solely for use on Infineon hardware products. Any other use, reproduction, modification, translation, or compilation of the software is prohibited. For further information on the Product, technology, delivery terms and conditions, and prices, please contact your nearest Infineon office or visit https://www.infineon.com