XDP7xx Gang Programmer user guide

About this document

Scope and purpose

This document is the user guide for the XDP7xx Gang Programmer board. The XDP™ Gang Programmer boards are used to program the XDP7xx devices in offline mode. The board can program up to four devices at the same time and is compatible with XDP710-001, XDP710-002, XDP711-001, and XDP700-002. This board can be used by the customers doing early validation of the product or have a small production volume.

Intended audience

This document is intended for test engineers and production engineers who program XDP7xx devices with the XDP™ Gang Programmer.

Important notice

“Evaluation Boards and Reference Boards” shall mean products embedded on a printed circuit board (PCB) for demonstration and/or evaluation purposes, which include, without limitation, demonstration, reference and evaluation boards, kits and design (collectively referred to as “Reference Board”).

Environmental conditions have been considered in the design of the Evaluation Boards and Reference Boards provided by Infineon Technologies. The design of the Evaluation Boards and Reference Boards has been tested by Infineon Technologies only as described in this document. The design is not qualified in terms of safety requirements, manufacturing and operation over the entire operating temperature range or lifetime.

The Evaluation Boards and Reference Boards provided by Infineon Technologies are subject to functional testing only under typical load conditions. Evaluation Boards and Reference Boards are not subject to the same procedures as regular products regarding returned material analysis (RMA), process change notification (PCN) and product discontinuation (PD).

Evaluation Boards and Reference Boards are not commercialized products, and are solely intended for evaluation and testing purposes. In particular, they shall not be used for reliability testing or production. The Evaluation Boards and Reference Boards may therefore not comply with CE or similar standards (including but not limited to the EMC Directive 2004/EC/108 and the EMC Act) and may not fulfill other requirements of the country in which they are operated by the customer. The customer shall ensure that all Evaluation Boards and Reference Boards will be handled in a way which is compliant with the relevant requirements and standards of the country in which they are operated.

The Evaluation Boards and Reference Boards as well as the information provided in this document are addressed only to qualified and skilled technical staff, for laboratory usage, and shall be used and managed according to the terms and conditions set forth in this document and in other related documentation supplied with the respective Evaluation Board or Reference Board.

It is the responsibility of the customer’s technical departments to evaluate the suitability of the Evaluation Boards and Reference Boards for the intended application, and to evaluate the completeness and correctness of the information provided in this document with respect to such application.

The customer is obliged to ensure that the use of the Evaluation Boards and Reference Boards does not cause any harm to persons or third party property.
The Evaluation Boards and Reference Boards and any information in this document is provided "as is" and Infineon Technologies disclaims any warranties, express or implied, including but not limited to warranties of non-infringement of third party rights and implied warranties of fitness for any purpose, or for merchantability.

Infineon Technologies shall not be responsible for any damages resulting from the use of the Evaluation Boards and Reference Boards and/or from any information provided in this document. The customer is obliged to defend, indemnify and hold Infineon Technologies harmless from and against any claims or damages arising out of or resulting from any use thereof.

Infineon Technologies reserves the right to modify this document and/or any information provided herein at any time without further notice.

Safety precautions

Note: Please note the following warnings regarding the hazards associated with development systems.

Table 1 Safety precautions

	**Caution:** *The programmer board contains parts and assemblies sensitive to electrostatic discharge (ESD). Electrostatic control precautions are required when installing, testing, servicing or repairing the assembly. Component damage may result if ESD control procedures are not followed. If you are not familiar with electrostatic control procedures, refer to the applicable ESD protection handbooks and guidelines.*
	**Caution:** *The programming board is shipped with packing materials that need to be removed prior to installation. Failure to remove all packing materials that are unnecessary for system installation may result in overheating or abnormal operating conditions.*

Table of contents

About this document **1**
Important notice **2**
Safety precautions **3**
Table of contents **4**
1 Introduction **5**
2 Hardware and software requirements **6**
3 XDP7xx Gang Programmer board **8**
3.1 Electrical specifications 8
3.2 Ordering code 8
3.3 Block diagram 8
3.4 XDP7x0 Gang Programmer board schematics 10
3.1 Gang Programmer board layout 13
4 Board setup and programming **15**
4.1 Set up the board 15
4.2 Set up the XDP™ Gang Programmer GUI 15
4.1 Programming the installed devices 20
4.2.1 Detecting the connected devices 20
4.2.2 OTP programming the connected devices 21
4.1.1 Trying to program already programmed devices 25
5 Programming failures due to loss of 22 V **27**
References **28**
Revision history **29**
Disclaimer **30**

1 Introduction

XDP7xx Gang Programmer provides test and evaluation engineers an easier and efficient way to program up to four XDP™ protection and monitoring devices simultaneously. The XDP™ Gang Programmer supports the following devices:

- XDP711-001
- XDP710-002
- XDP710-001
- XDP700-002

Note: The devices XDP710V002-ENG and XDP710V002, as well as XDP700V002-ENG and XDP700V002, are functionally identical, differing only in their MFR_MODEL ID.

While the Gang Programmer lists these device variants separately, they are fully interchangeable for programming. Either the ENG or non-ENG version of a device can be used to program both variants of the corresponding model.

The communication dongle and 22 V voltage supply for the devices are integrated within the Gang Programmer board. This reduces the external connections and only requires a USB connection between the board and the computer running the Gang Programmer GUI.

Note: This document highlights the programming steps for XDP710-002 device. The same steps can be replicated for programming XDP710-001 and XDP700-002 devices.

2 Hardware and software requirements

- XDP7xx Gang Programmer board (PRGXDP710 Rev D) as shown in Figure 1
- USB-C cable
- XDP™ Gang Programmer

Note: Download the programmer version 1.3.1.202503252218 or later.

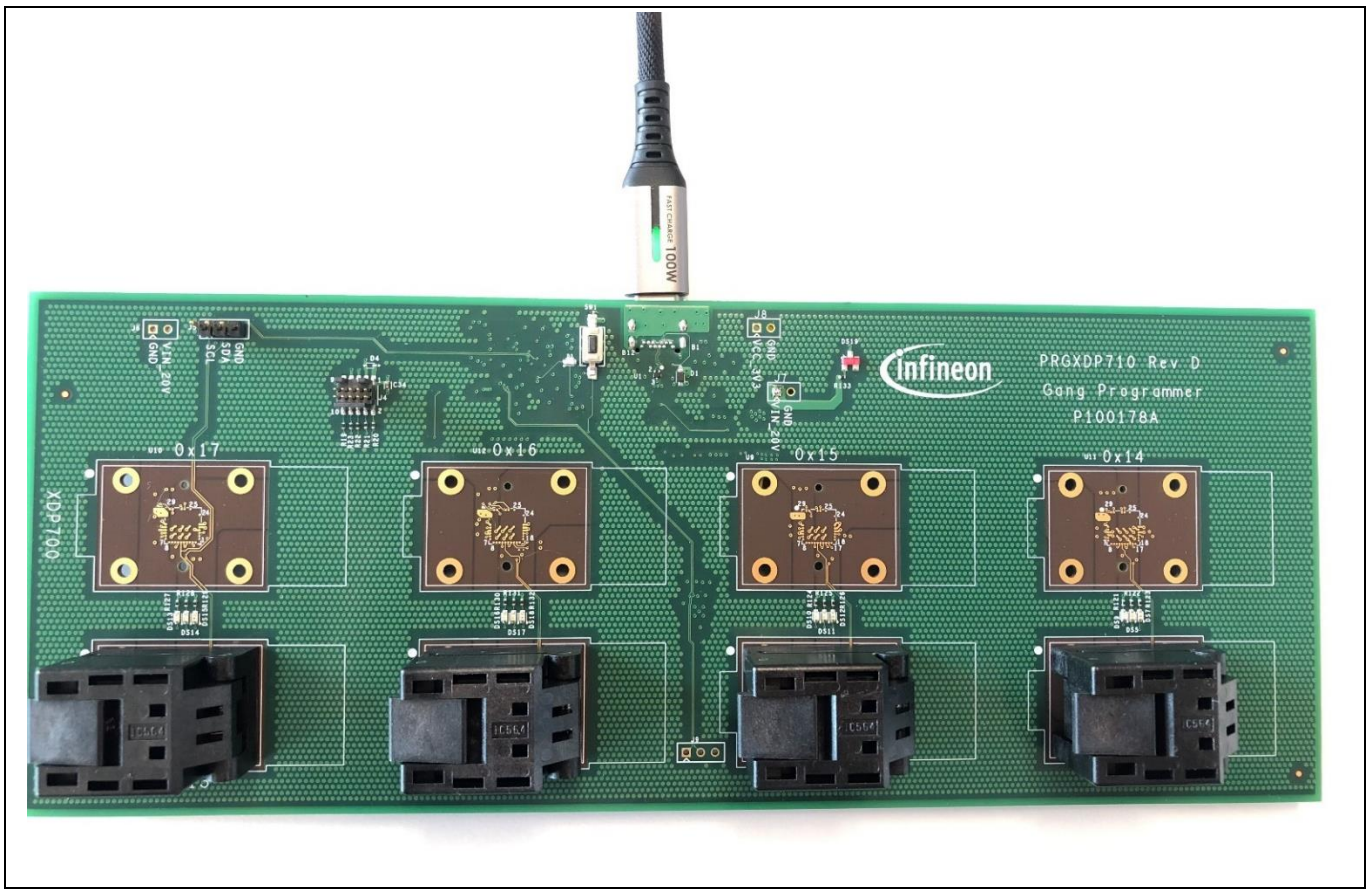

Figure 1 XDP7xx Gang Programmer board

Hardware and software requirements

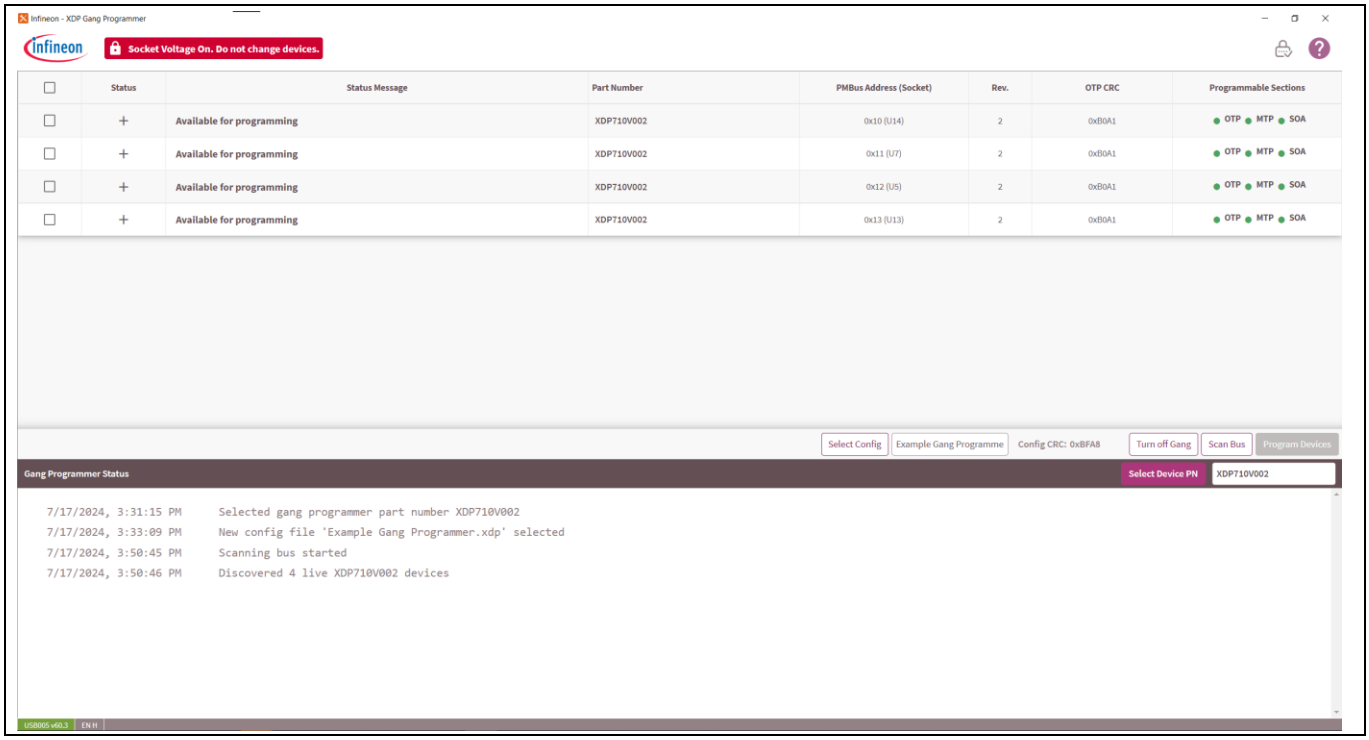

Figure 2 XDP™ Gang Programmer GUI

3 XDP7xx Gang Programmer board

3.1 Electrical specifications

- **Input voltage:** 5 V via USB-C
- **Output voltage:** 3.3 V and 22 V generated internally

Note: 20 V is minimum voltage required for the programming of XDP7xx devices. For this board, 22 V is selected to have some margin.

3.2 Ordering code

Table 2 Ordering code for XDP700/10/11

Ordering code	No. of sockets installed
Device : XDP710-001, XDP710-002, and XDP711-001	
PRG_XDP710_BRD	4
PRG_XDP710_BRD_1	1
Device: XDP700-002	
PRG_XDP700_BRD	4
PRG_XDP700_BRD_1	1

Individual sockets that can be installed on the boards mentioned in Table 2 can be ordered via ordering code mentioned in Table 3.

Table 3 Ordering code for sockets

Device	Ordering code
XDP711-001, XDP710-001, XDP710-002, and XDP700-002	XDP7_HS_SOCKET_1

3.3 Block diagram

The XDP7xx Gang Programmer block diagram shown in Figure 3 consists of:

- Buck regulator (5 V to 3.3 V): Provides 3.3 V to the PSOC™ 6 MCU within the Gang Programmer board from the USB bus voltage (5 V) from the PC
- Boost regulator (5 V to 22 V): Provides 22 V to XDP7xx devices from the USB supply from the PC
- PSOC™ 6 MCU: Works as a communication dongle between the host computer running XDP™ Programmer GUI and XDP7xx devices. MCU communicates with XDP7xx devices and LEDs via I2C communication protocol and sends the data to the GUI using USB communication protocol.
- Sockets: The board has two rows for mounting the sockets. Row 1 (highlighted in red) is for programming XDP700 devices. Row 2 (highlighted in yellow) is for programming XDP71x devices as shown in Figure 14XDP™ Gang Programmer GUI: Based on the XDP™ Designer platform, which makes it easier to interface with the Gang Programmer board
- USB Type-C connector: Use for communication and powering the board from the host PC

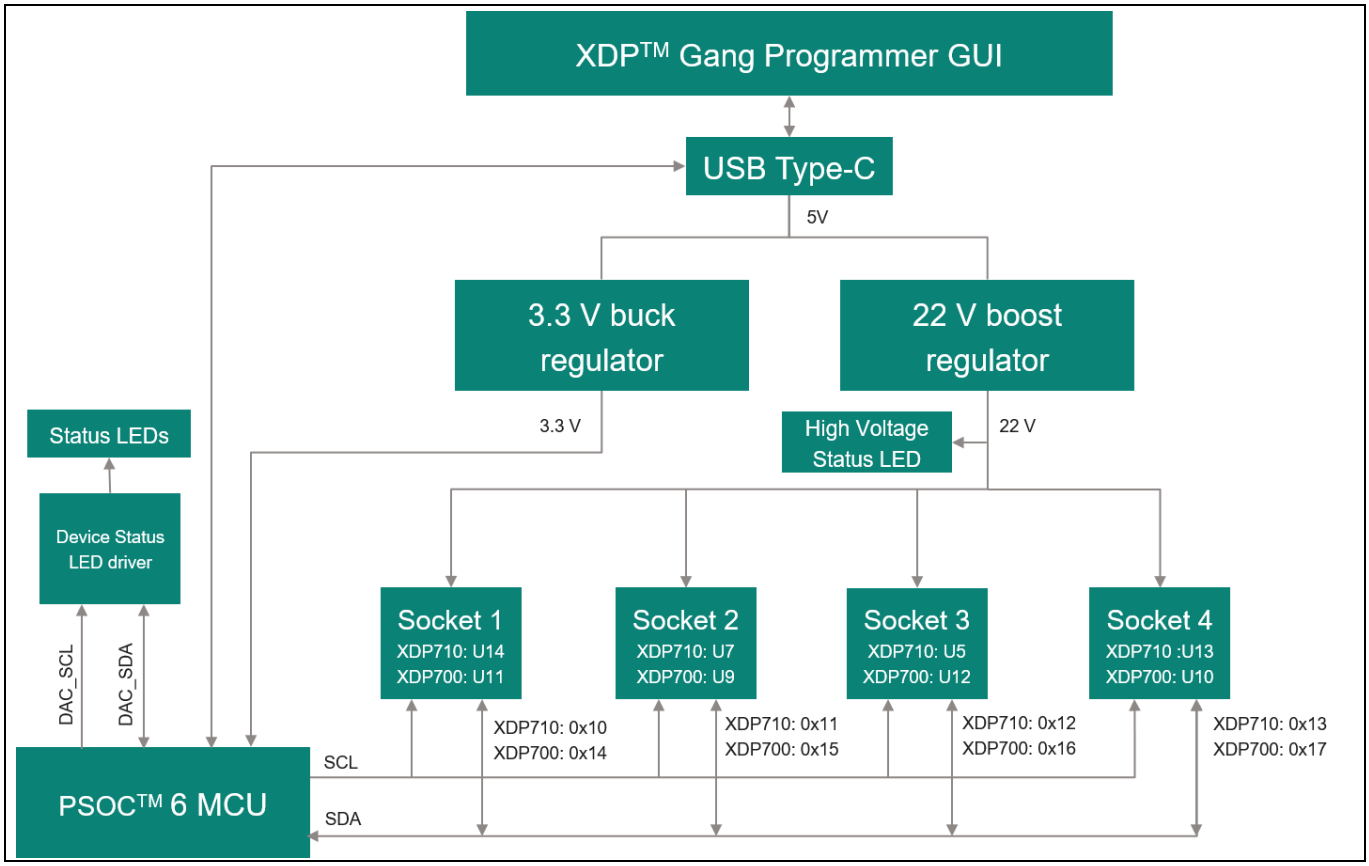

Figure 3 XDP710 evaluation platform block diagram

3.4 XDP7x0 Gang Programmer board schematics

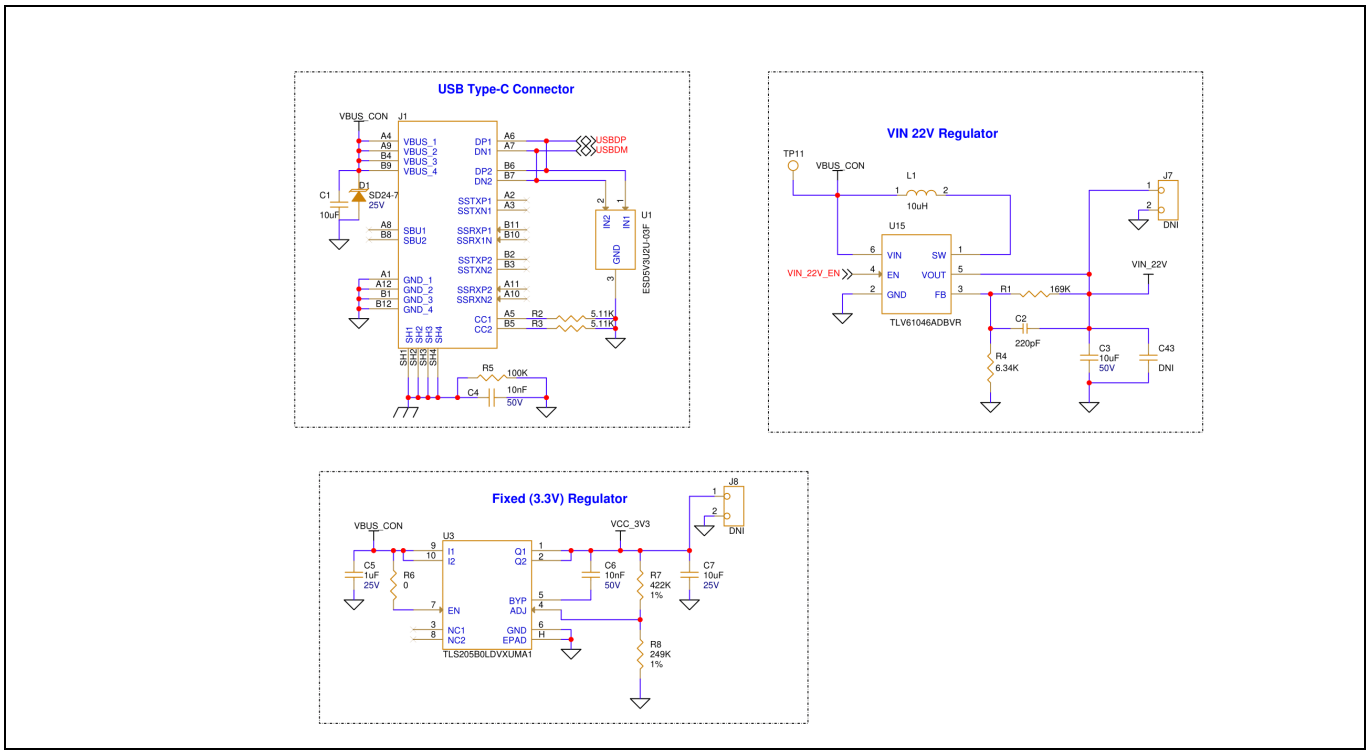

Figure 4 Schematics for voltage regulator

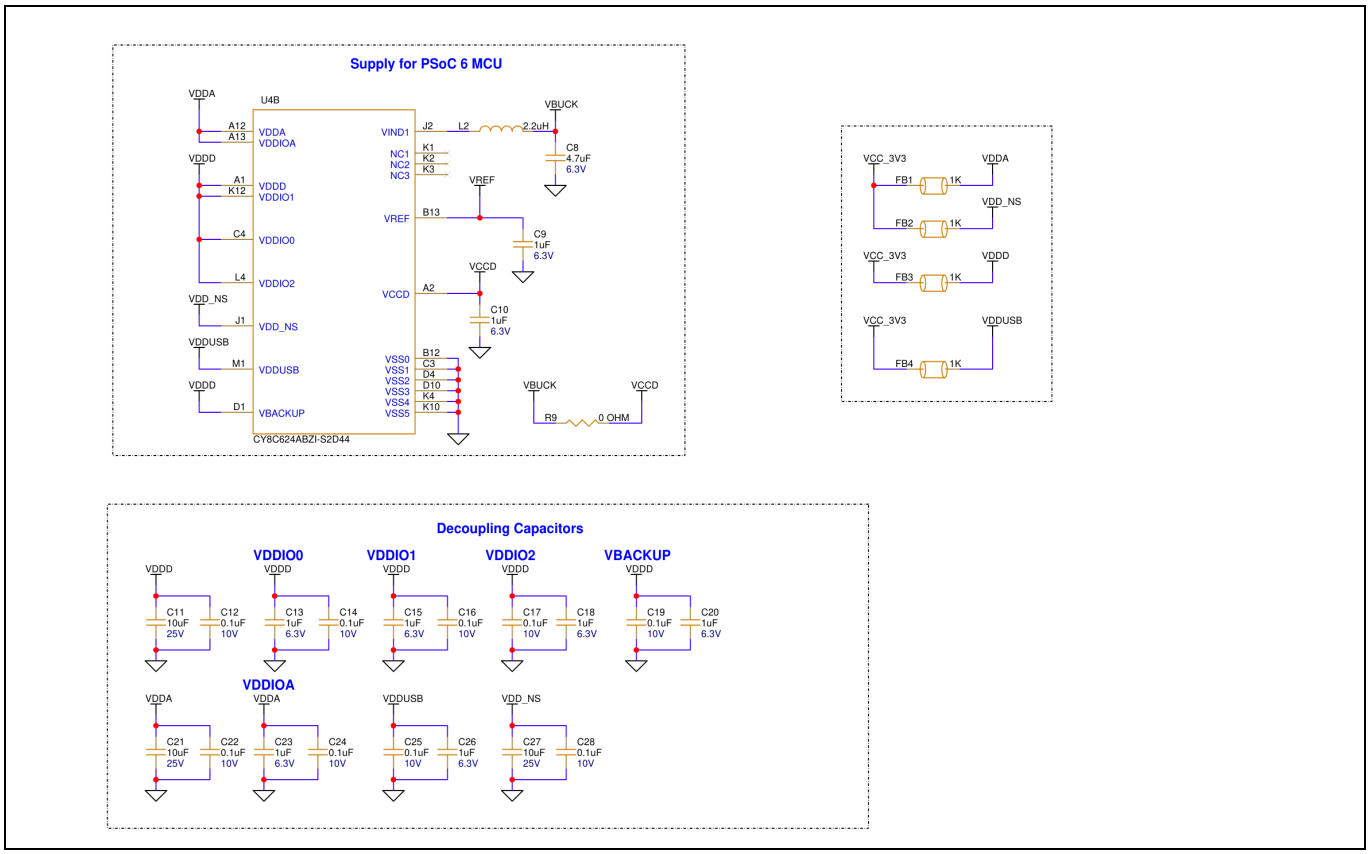

Figure 5 Schematics for PSOC™ 6 power

XDP7xx Gang Programmer board

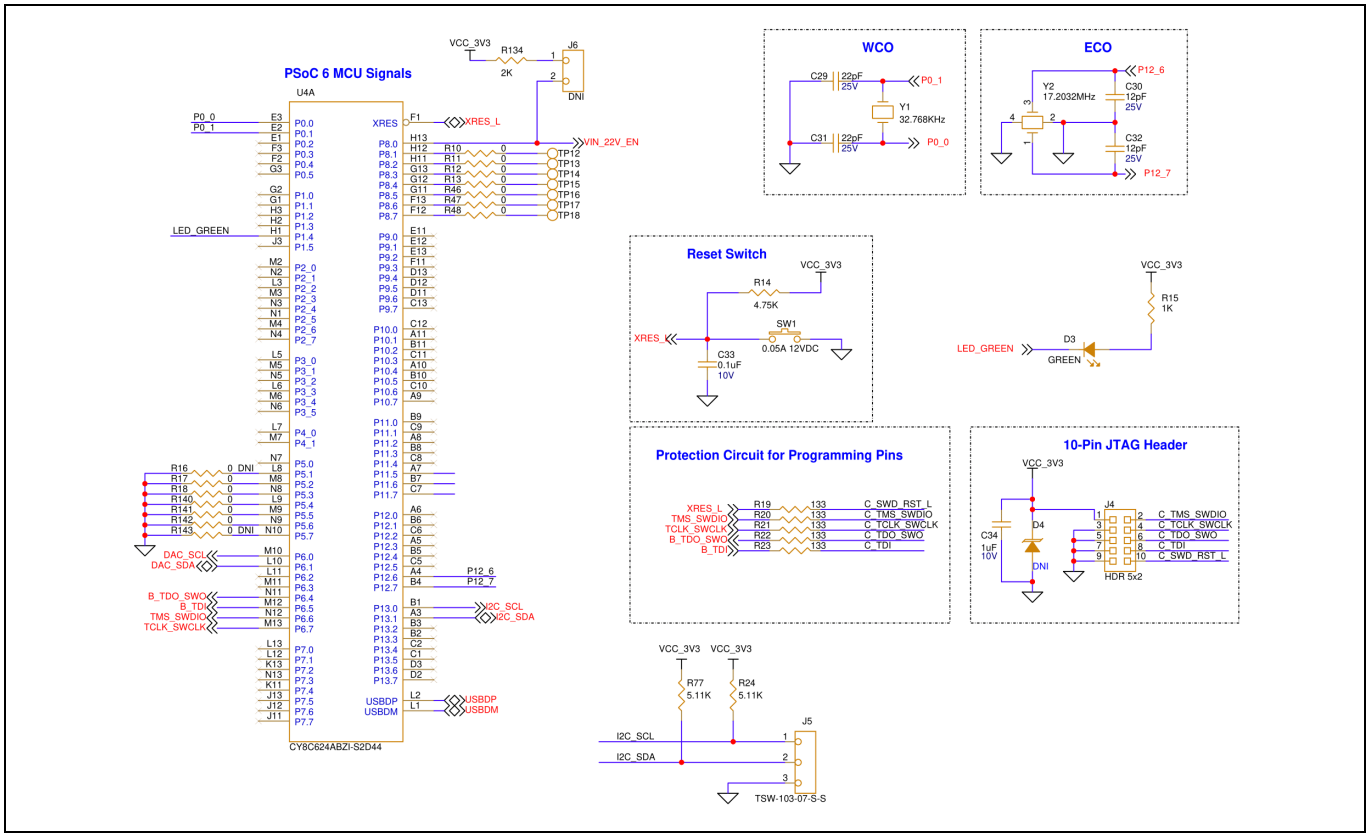

Figure 6 Schematics for PSOC™ 6 signals

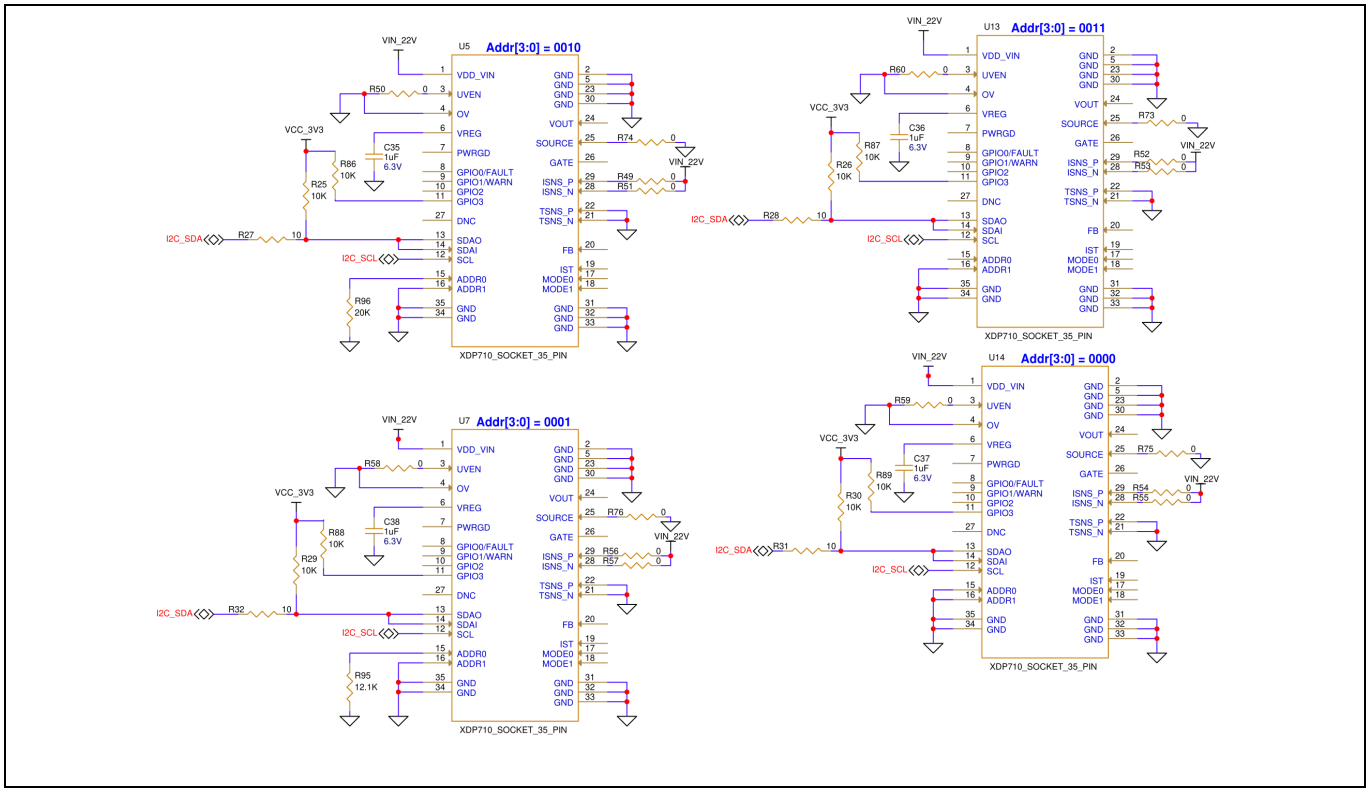

Figure 7 Schematics for XDP710/ XDP711 sockets

XDP7xx Gang Programmer board

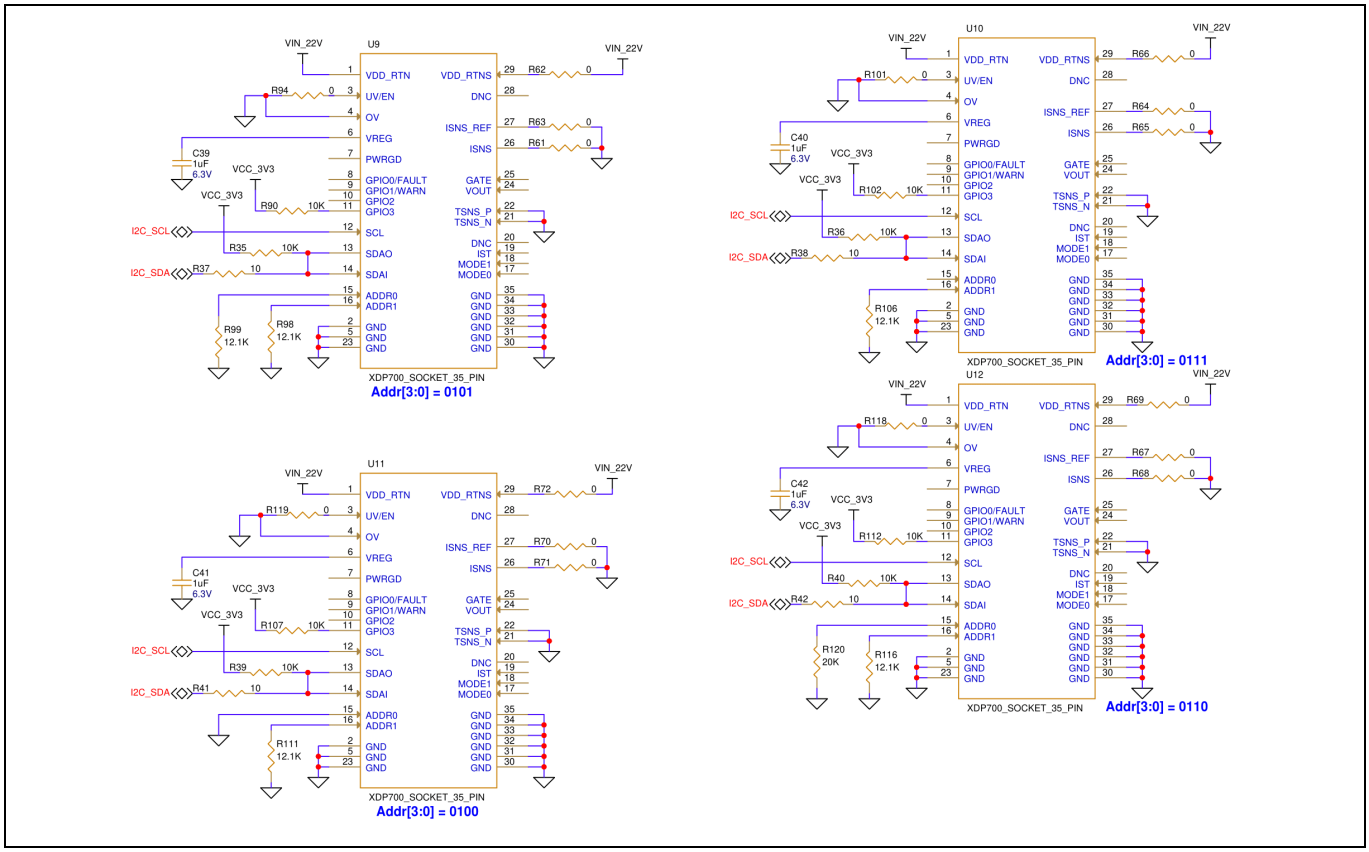

Figure 8 Schematics for XDP700 sockets

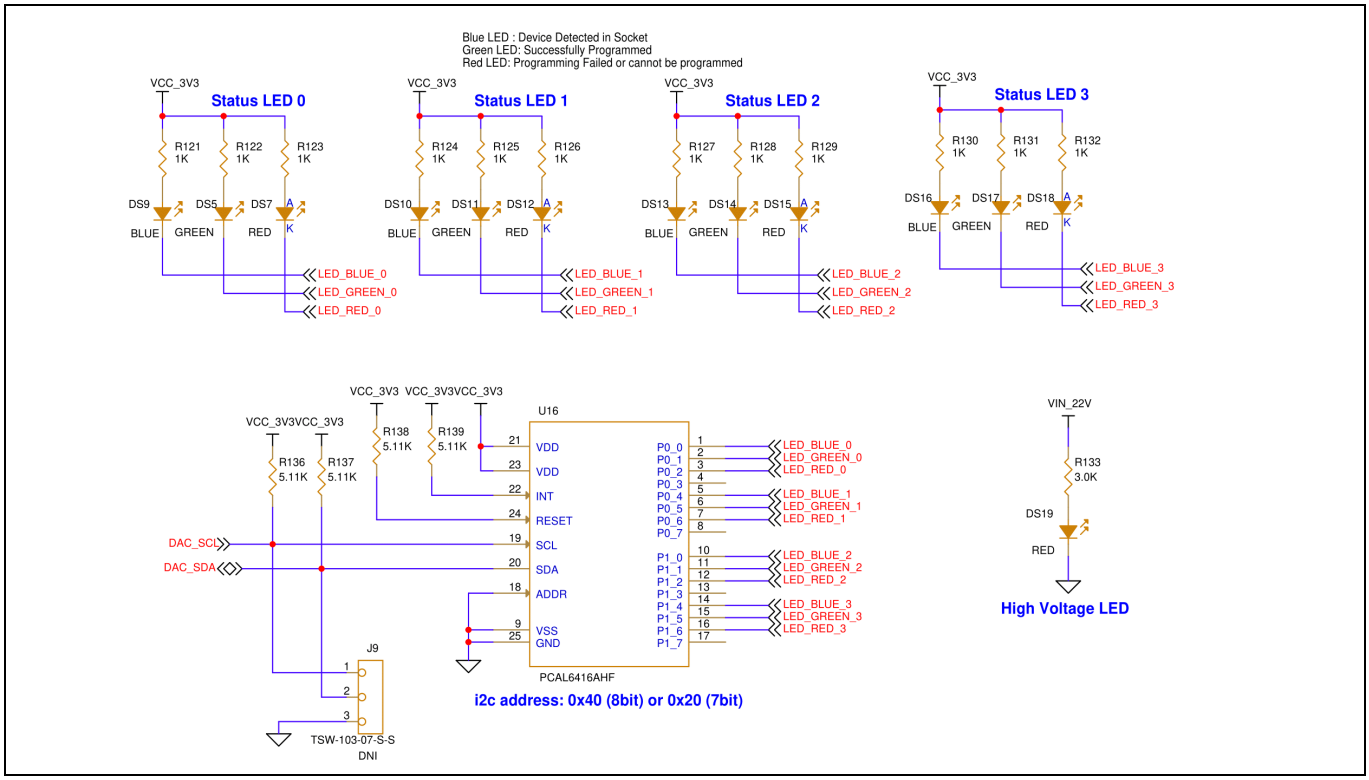

Figure 9 Schematics for LEDs

3.1 Gang Programmer board layout

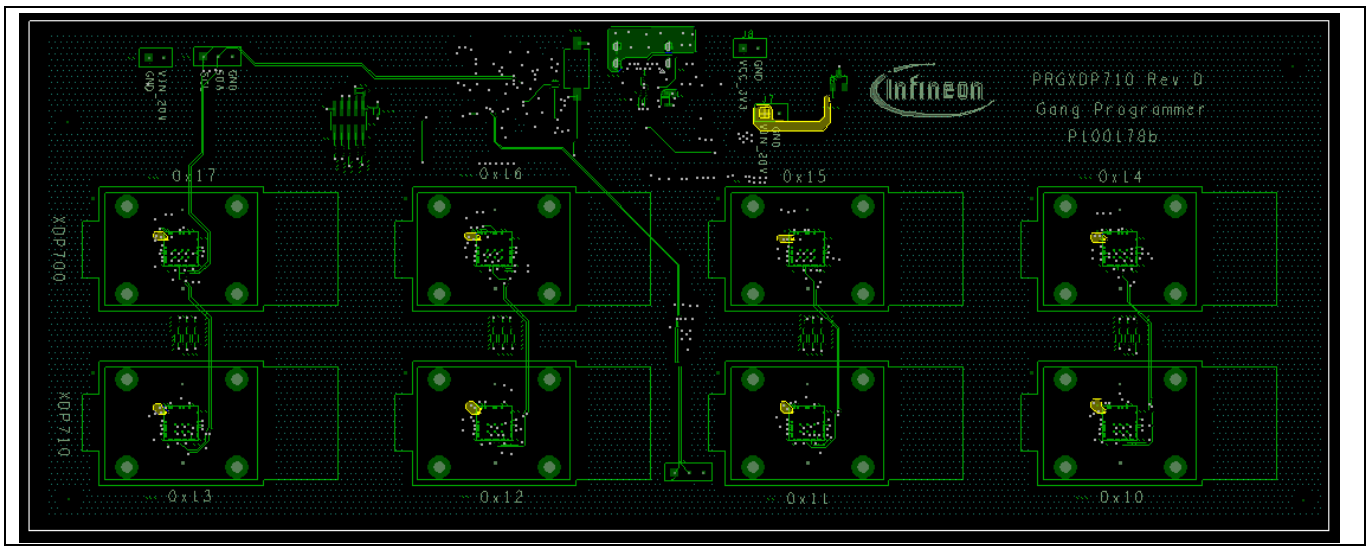

Figure 10 Top layer layout of main PCB

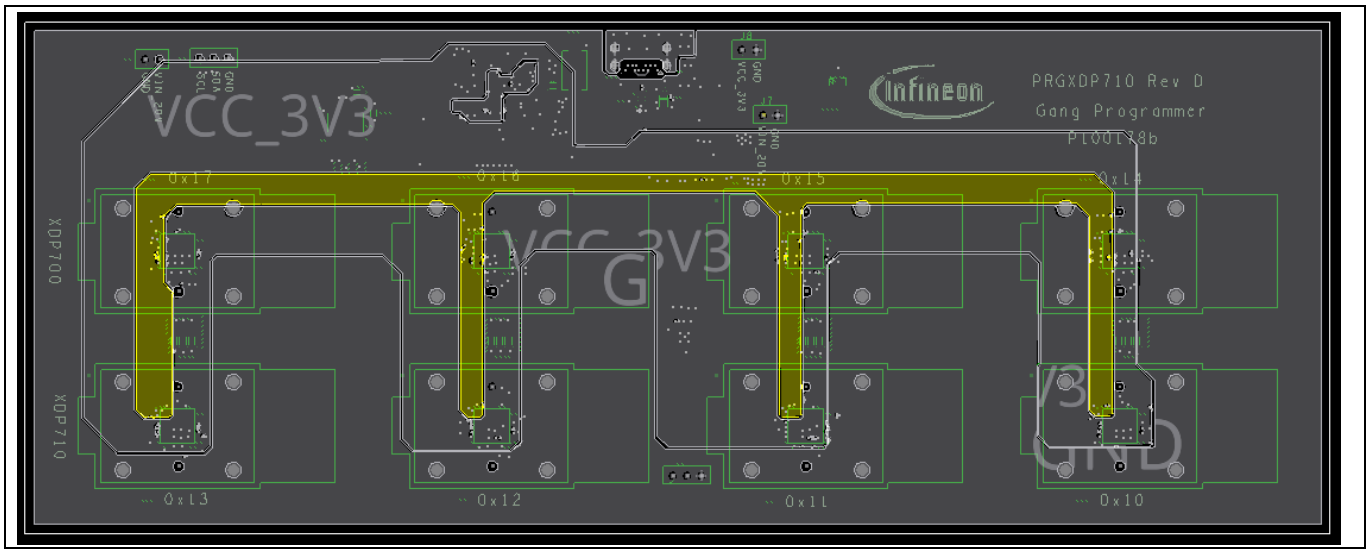

Figure 11 Mid 1 layer (V_{CC}) layout of main PCB

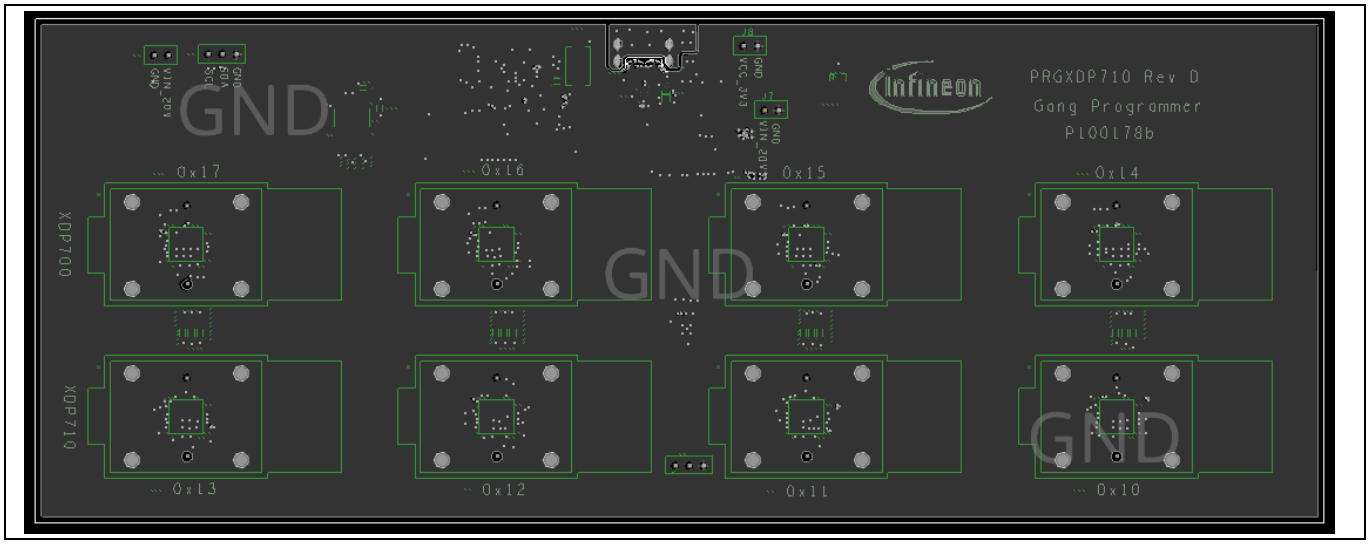

Figure 12 Mid 2 layer (GND) layout of main PCB

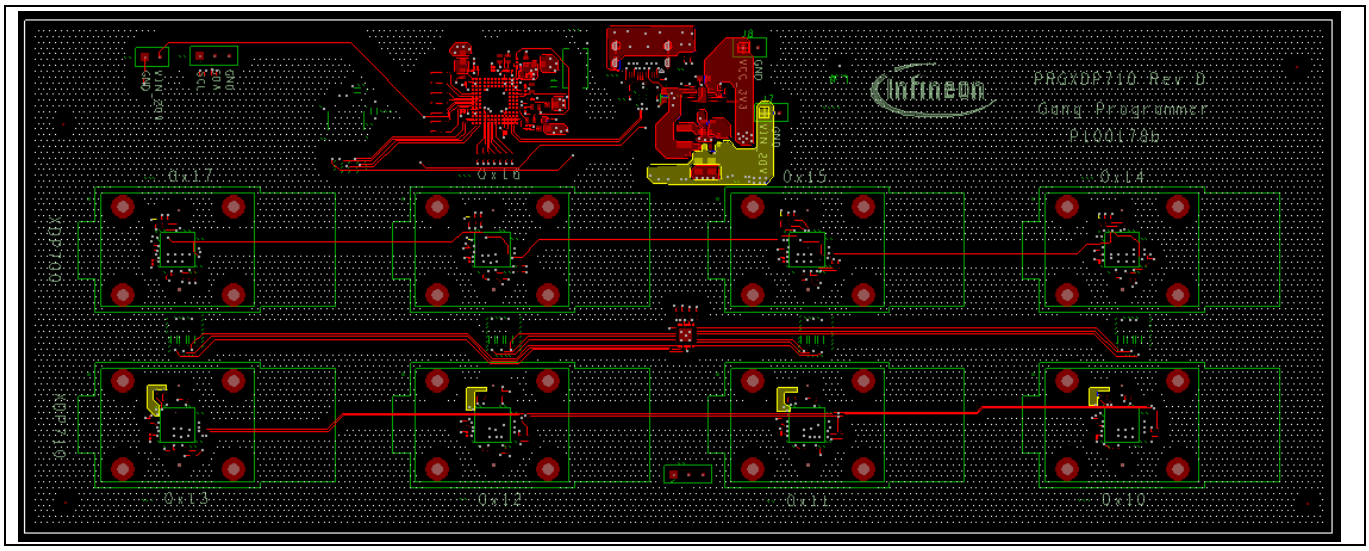

Figure 13 Bottom layer layout of main PCB

4 Board setup and programming

4.1 Set up the board

- Connect the USB cable between the board and the host PC
- The green LED starts flashing indicating that the board is powered

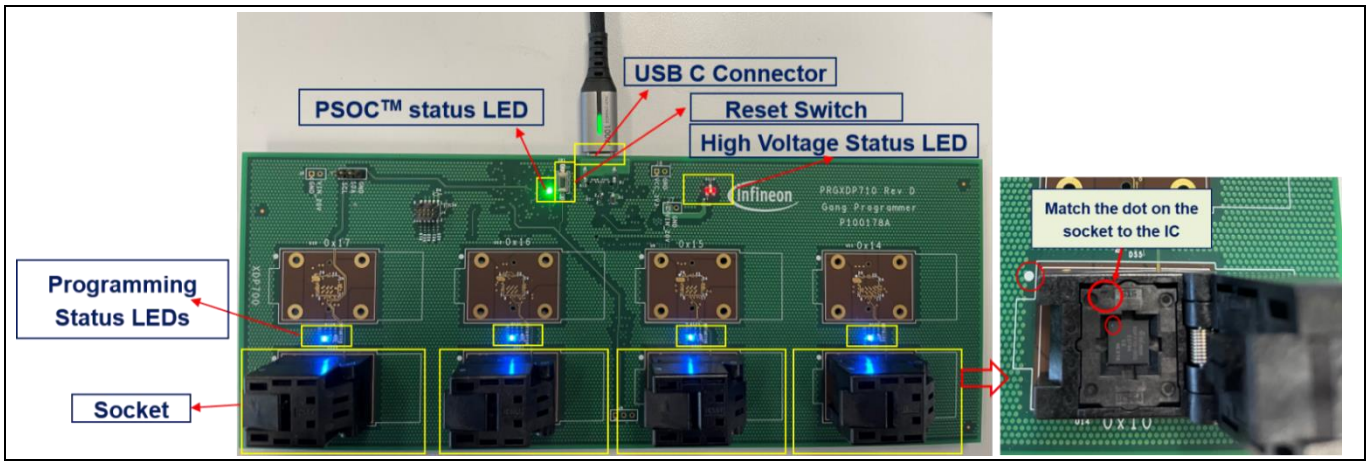

Figure 14 Gang Programmer board set up

4.2 Set up the XDP™ Gang Programmer GUI

1. Open XDP™ Gang Programmer GUI on the host PC



Figure 15 XDP™ Gang Programmer

The green tab on the left-bottom corner should read **USB005 v60.3** indicating that the board is connected TO the GUI as shown in Figure 16.

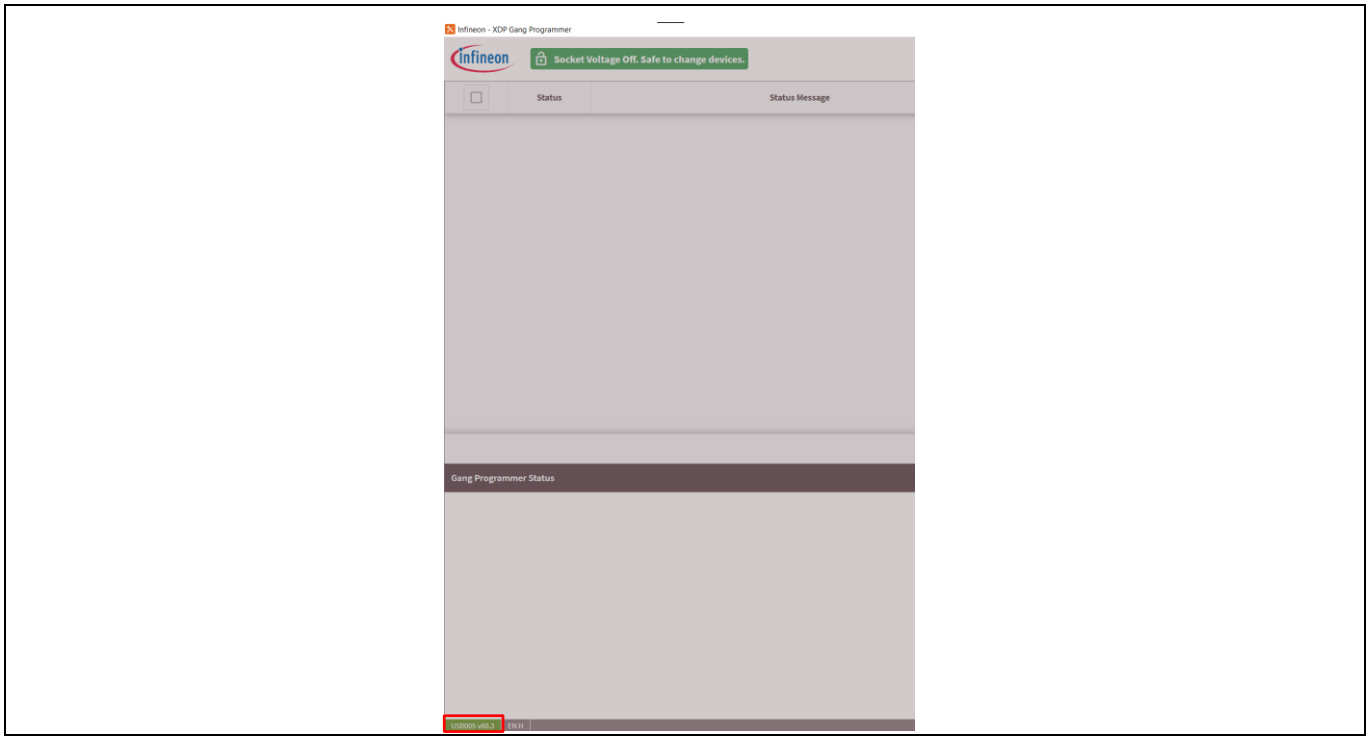

Figure 16 XDP™ Gang Programmer GUI connection with the board

2. Select the required XDP7x0V00x device from the list and click **Update**

Refer Table 4 for device selection options.

Table 4 Device selection options

Device	Selection option
XDP710-002	XDP710V002 or XDP710V002-ENG
XDP710-001	XDP710V001
XDP711-001	XDP711-001
XDP700-002	XDP700V002 or XDP700V002-ENG

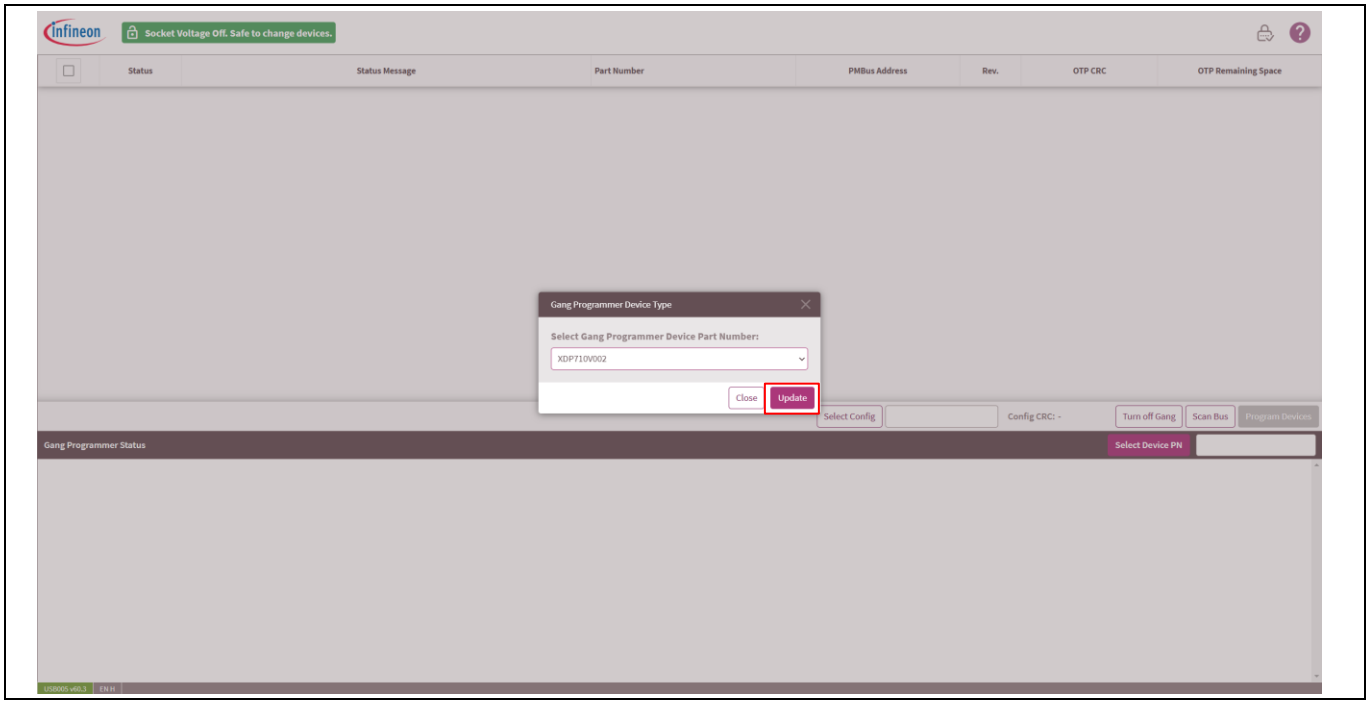

Figure 17 Select the XDP710V002 device

3. Click **Select Config**

The programming GUI only accepts the file in .xdp or .txt extensions generated by the XDP™ Designer GUI.

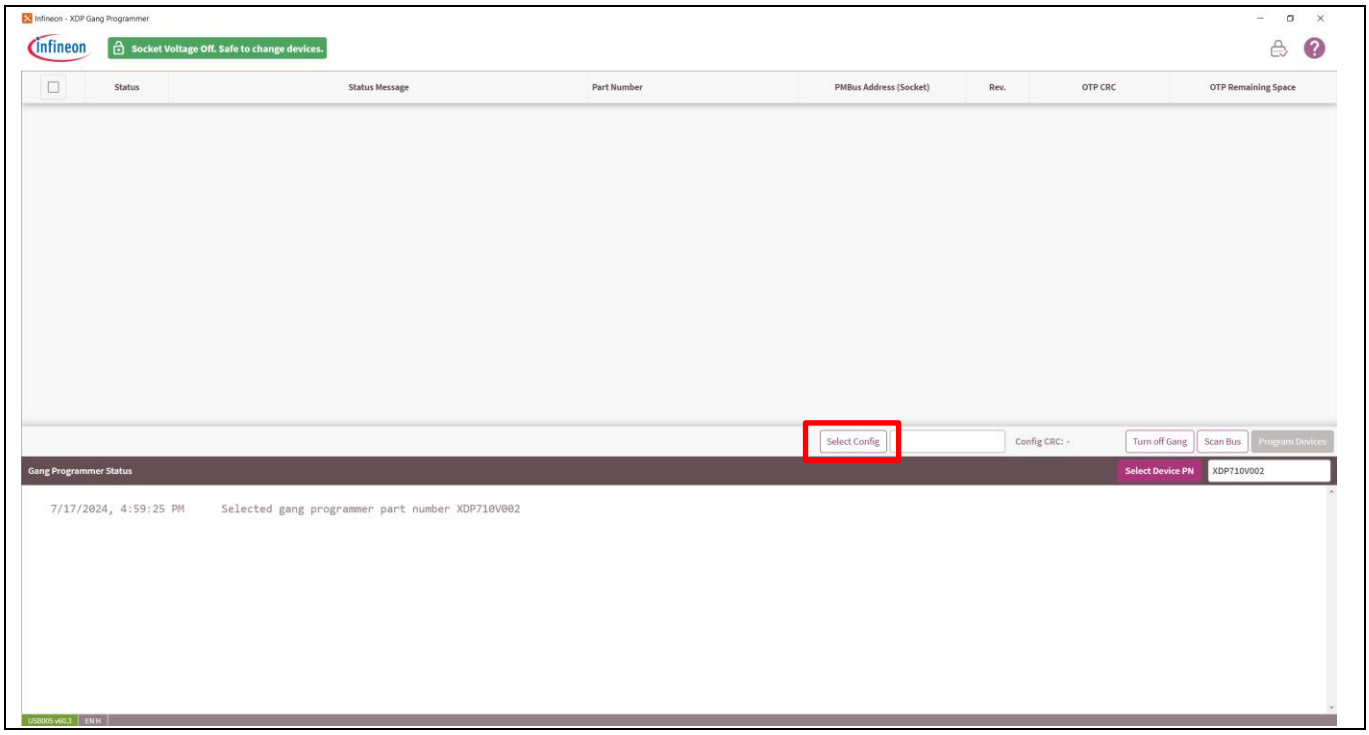

Figure 18 Selecting desired config file

4. Click **Browse** and select the necessary configuration file from your PC

5. Click **Load** to load the config file onto the GUI
   If the selected config file is not compatible with the device, an error message appears. This error message can appear if the wrong device config is loaded or the file extension other than .txt or .xdp is loaded

Note: The config file only generated by the XDP™ Designer GUI are compatible with the XDP™ Programmer GUI.

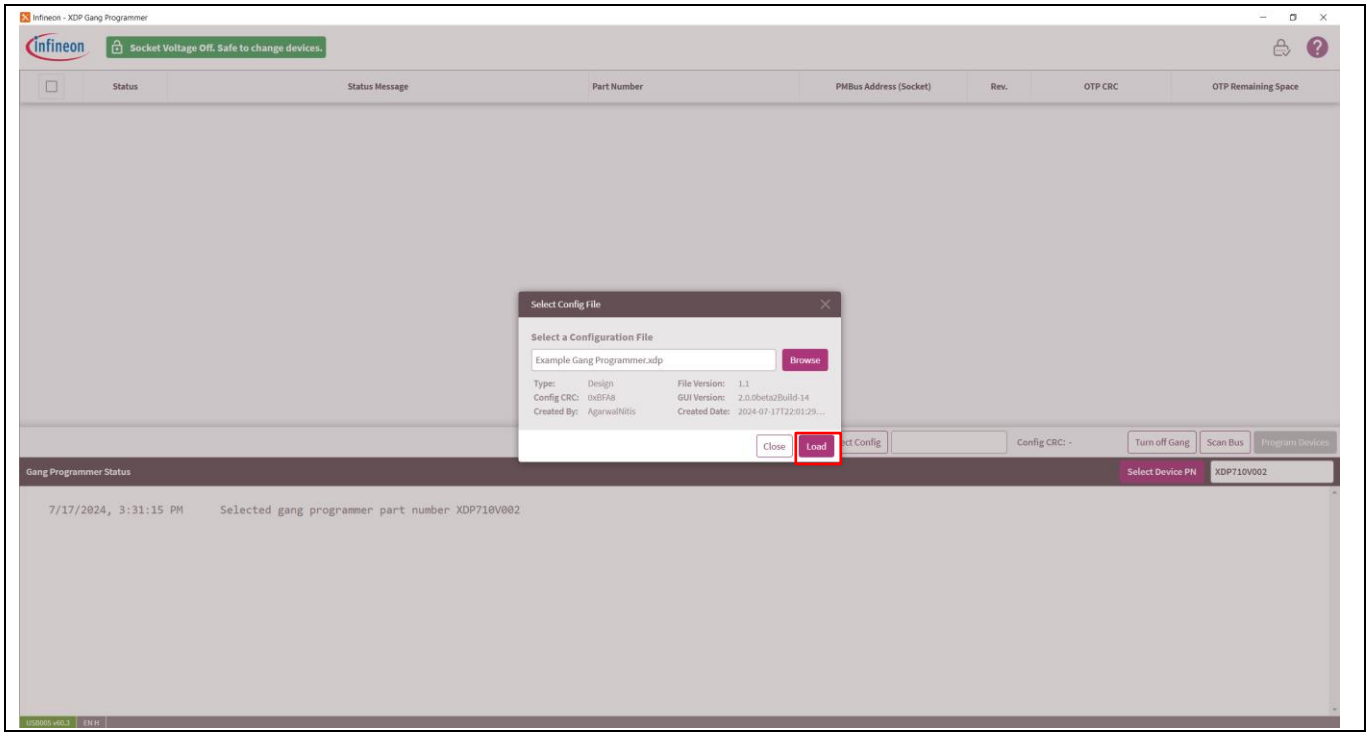

Figure 19 Selecting the required config file

6. After loading the config file, ensure that the message in green appears as shown in Figure 20
   The socket voltage message in green indicates that the sockets have 0 V and it is safe to install devices

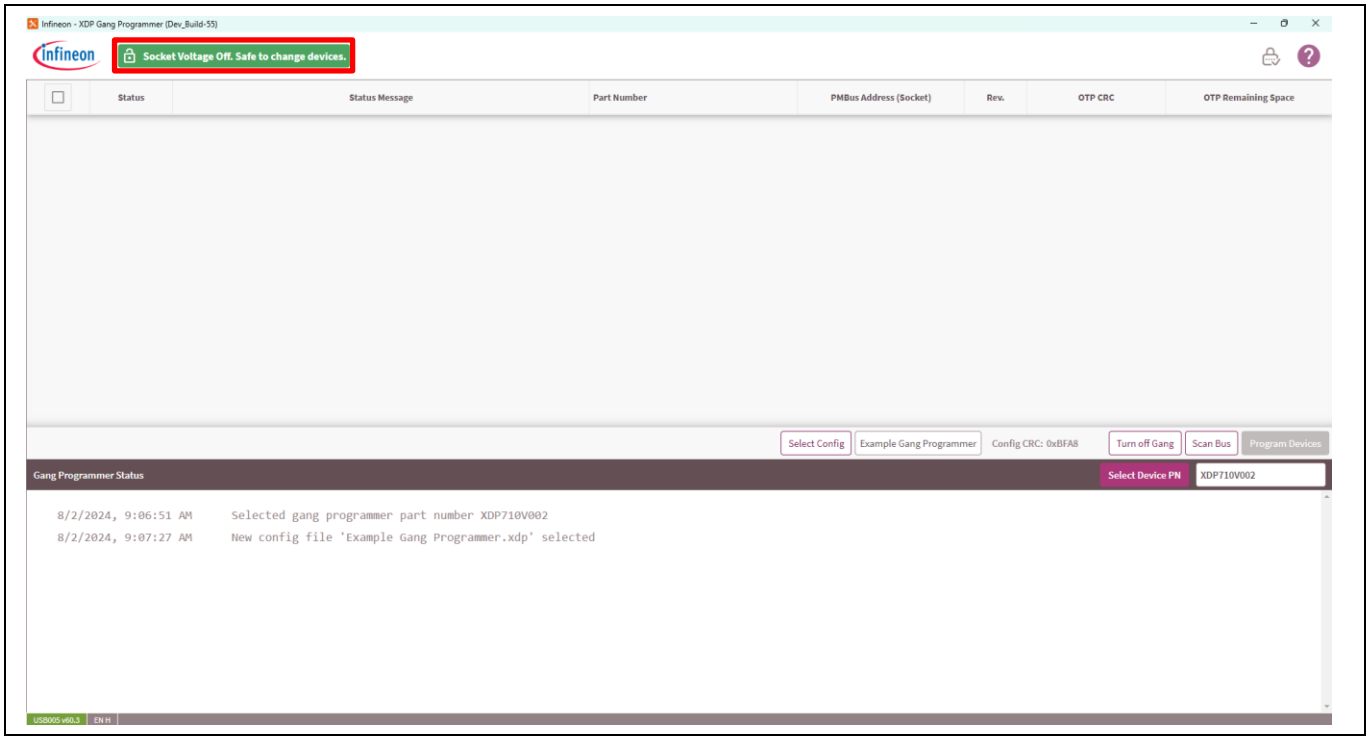

Figure 20 Safe socket voltage message

Install the devices in the correct orientation as shown in Figure 21 and close the sockets securely. Ensure that the pin of the device is not damaged during insertion/removal of IC from the socket. It is advisable to make use of an ESD safe vacuum suction pen for safe removal and installation of the IC into the socket.

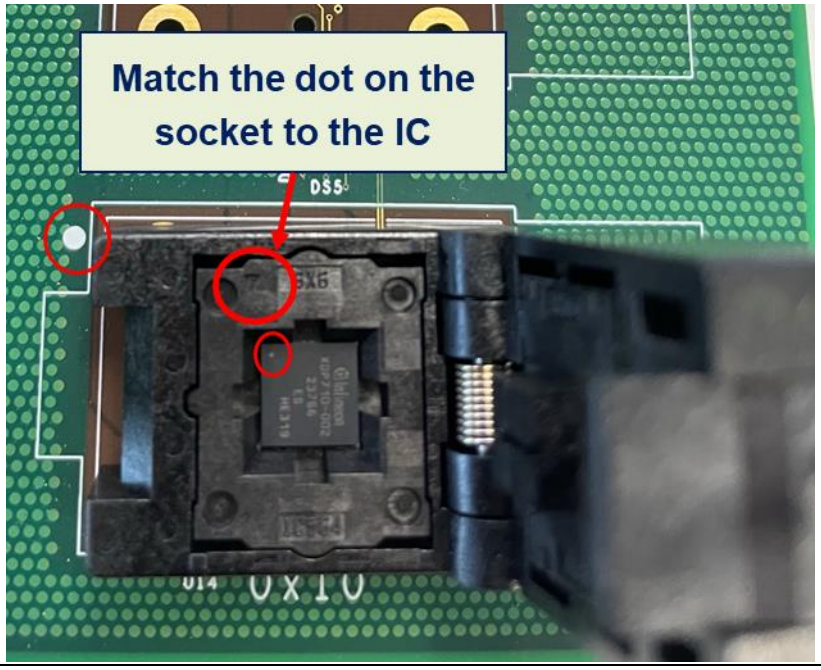

Figure 21 Match the notch with a dot on the IC for correct installation

4.1 Programming the installed devices

4.2.1 Detecting the connected devices

1. Click **Scan Bus** to detect connected devices
   The boost regulator is enabled, which supplies 22 V to the sockets necessary for OTP programming

Attention: ***Do not open the sockets at this stage because it could damage the device and/or the programmer board.***

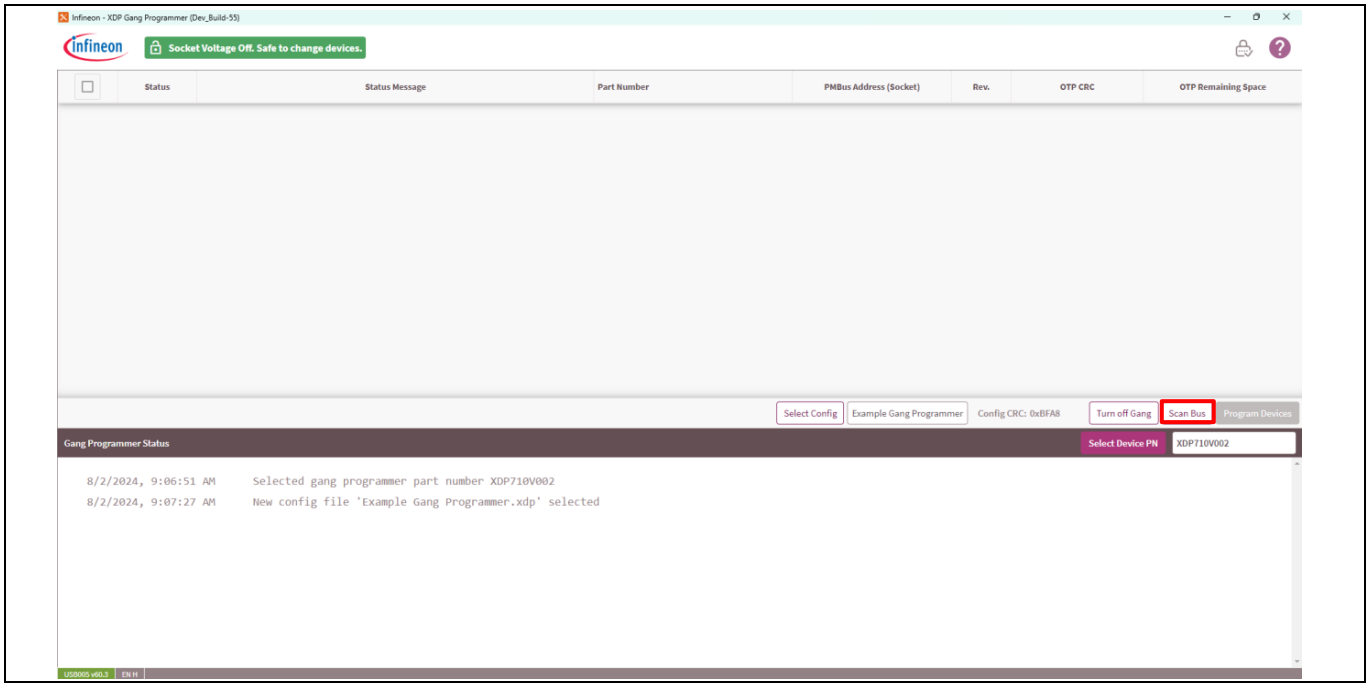

Figure 22 Scanning the bus to detect connected devices

The bus is scanned and the socket voltage message in red on the top left side shows that the board has a high voltage (22 V) as shown in Figure 23.

Attention: ***Whenever the socket voltage message appears, it indicates that the socket has 22 V. Do not open the sockets now. Opening the sockets could result in damage to the devices or/and the programmer board.***

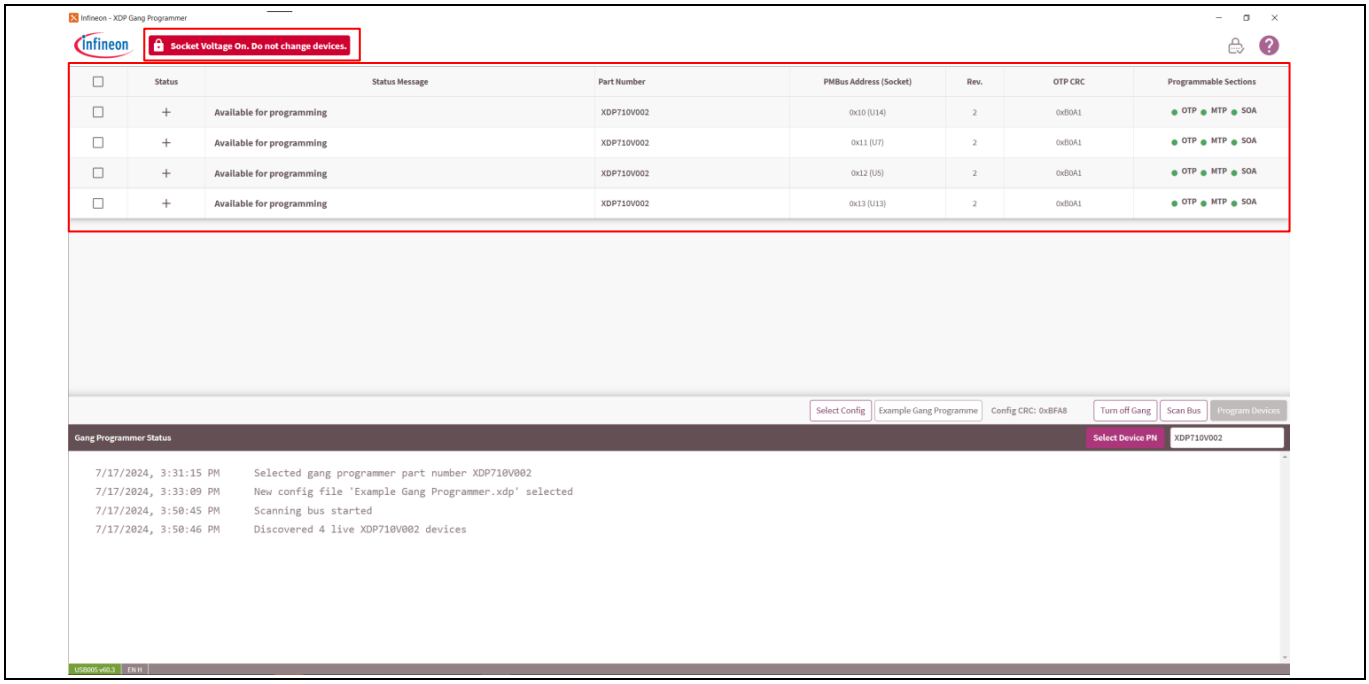

Figure 23 High socket-voltage message

After the scan is complete, the connected devices are listed as shown in Figure 24.

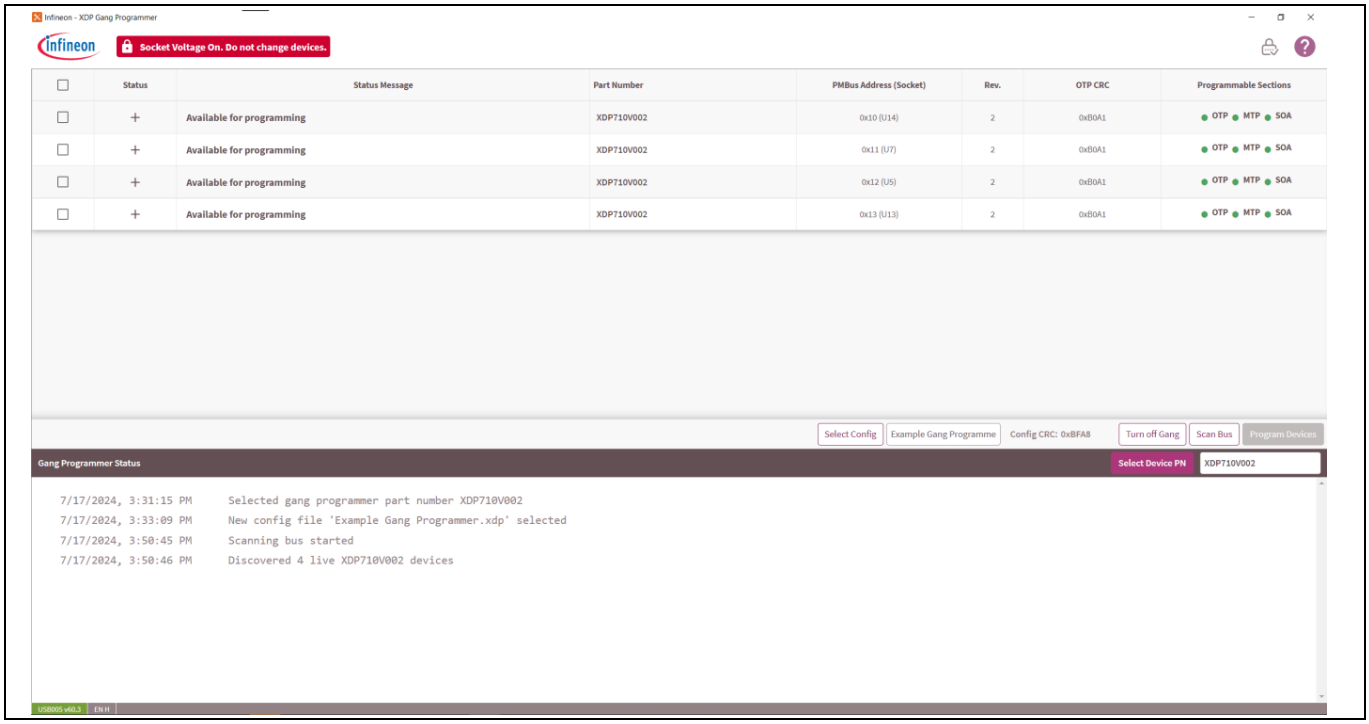

Figure 24 List of connected devices identified after scanning

4.2.2 OTP programming the connected devices

Figure 25 shows the list of connected devices. The **Status** (**+**) and **Status Message** indicates that the device is available for programming. In **Programmable Sections**, a green indictor next to the One-time programmable

(OTP), Multiple time programmable (MTP) (10 -times, and One-time programmable user defined safe operating area (SOA) memories, shows the availability for programming.

*Note: If the config file does not contain an SOA programmable section, the **SOA** section will not be shown under **Programmable Sections** in the GUI.*

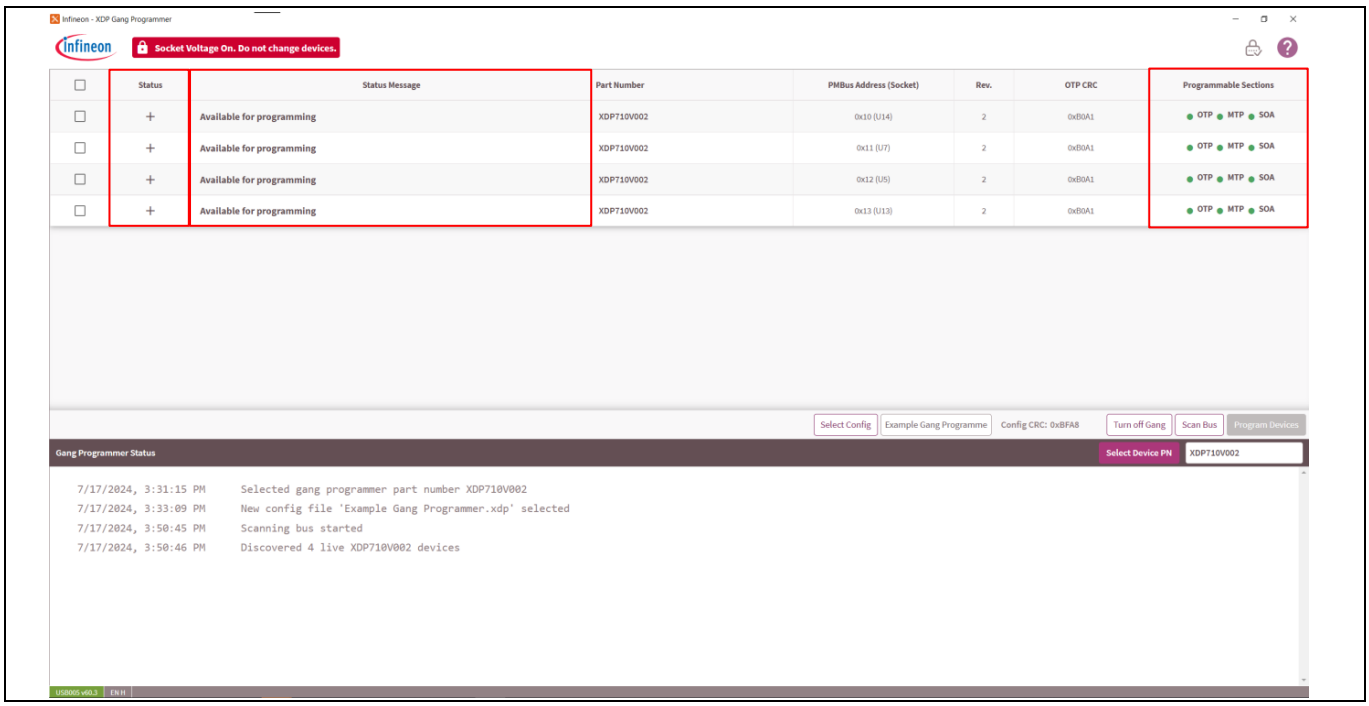

Figure 25 Reading the device status and programmable sections

Figure 26 shows that the red LED is on, indicating that the 22 V rail is active. The blue LEDs indicate that the devices have been identified in the corresponding socket.

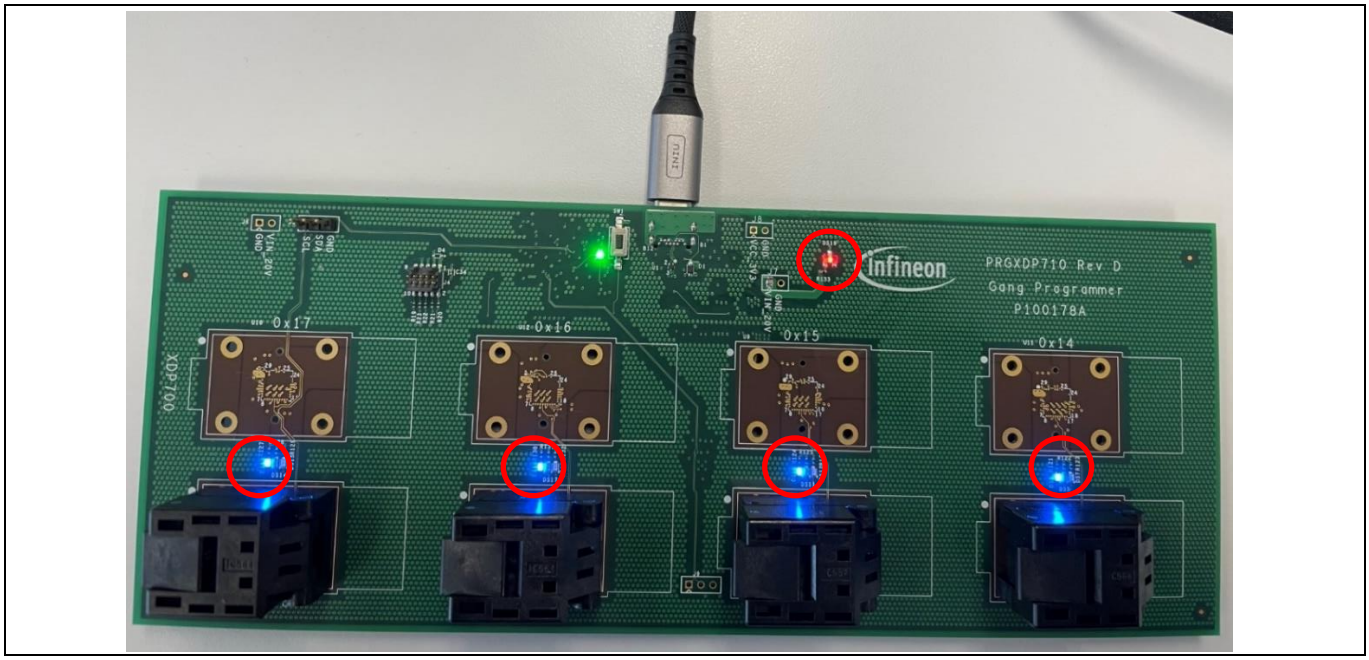

Figure 26 High-voltage LED and device detection LED

2. Select the devices for programming
   The **Status** shows '●' indicating that the device is **Selected for programming** as shown in Figure 27.

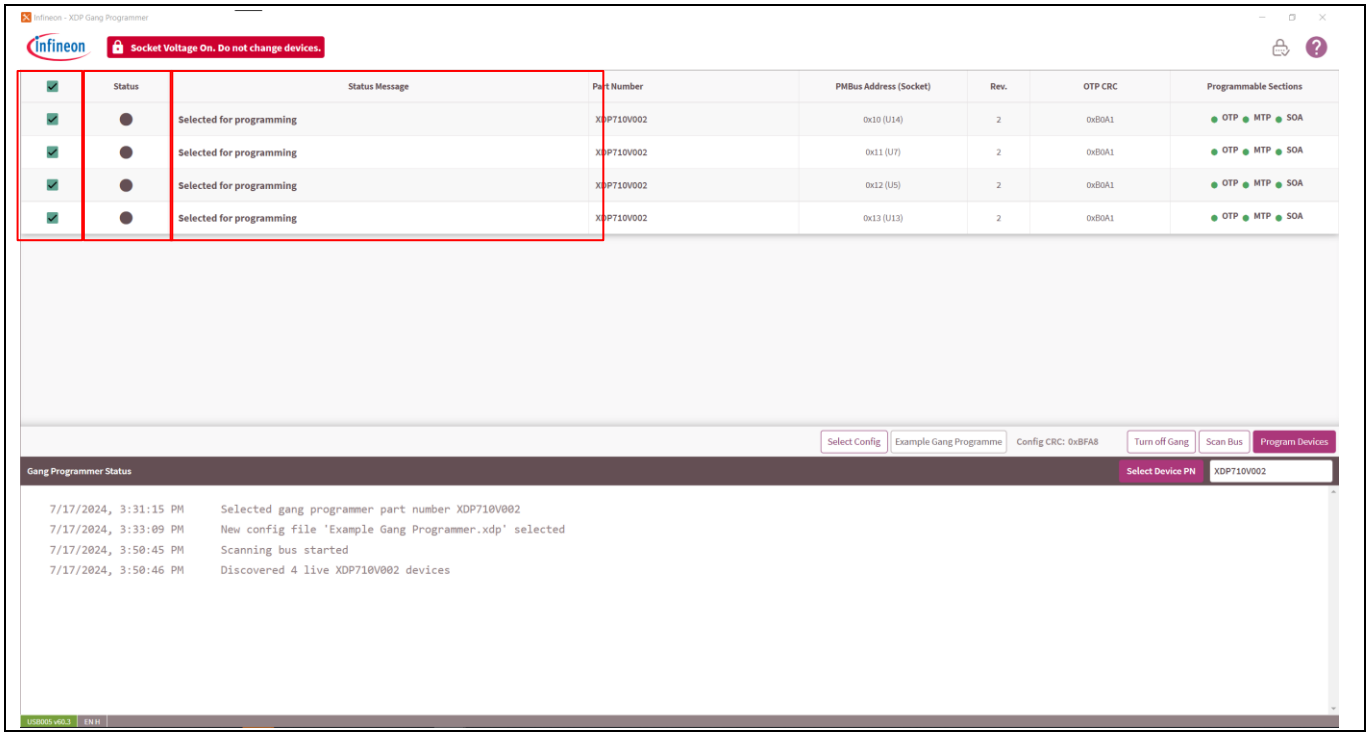

Figure 27 Selecting devices for programming

3. Click **Program Devices**
   The programming starts automatically

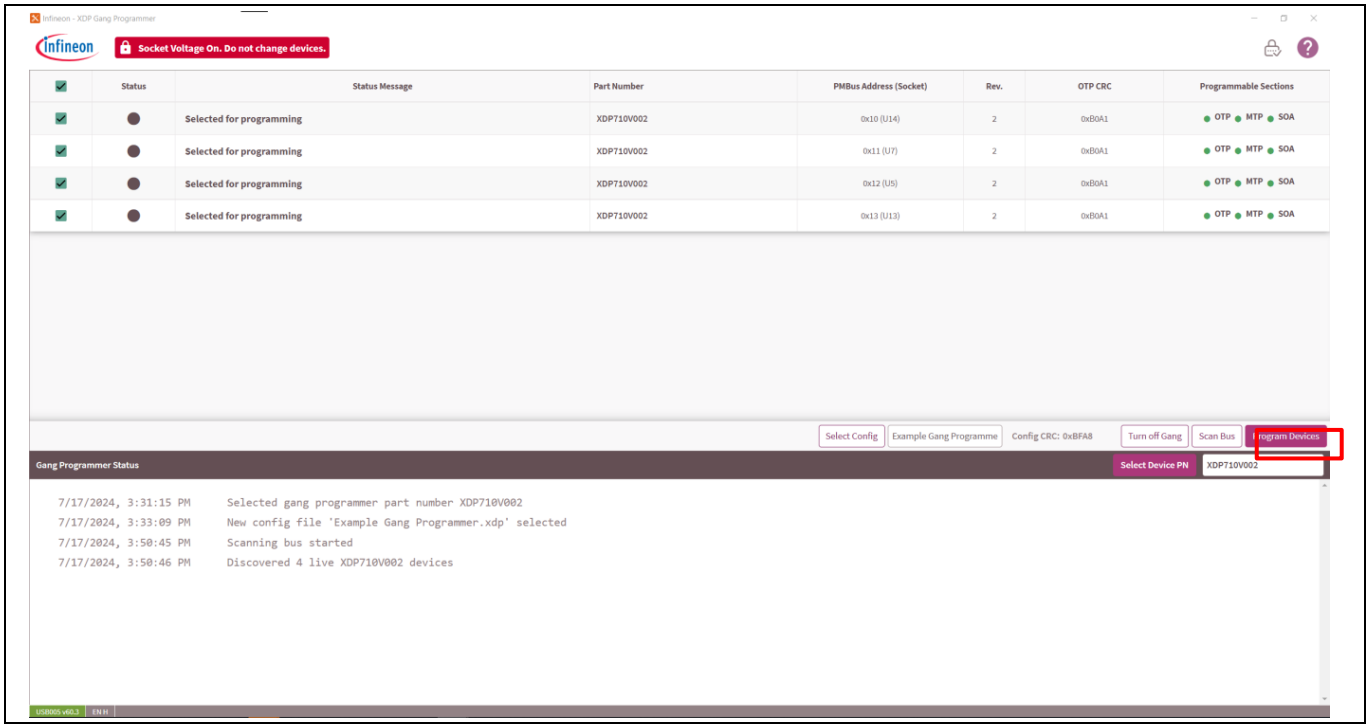

Figure 28 Programming the selected devices

When the programming starts, **Status** shows three dots indicating the **Programming config**. The devices that have the programming completed are highlighted in yellow with a message **Programming successful, pending validation** as shown in Figure 29.

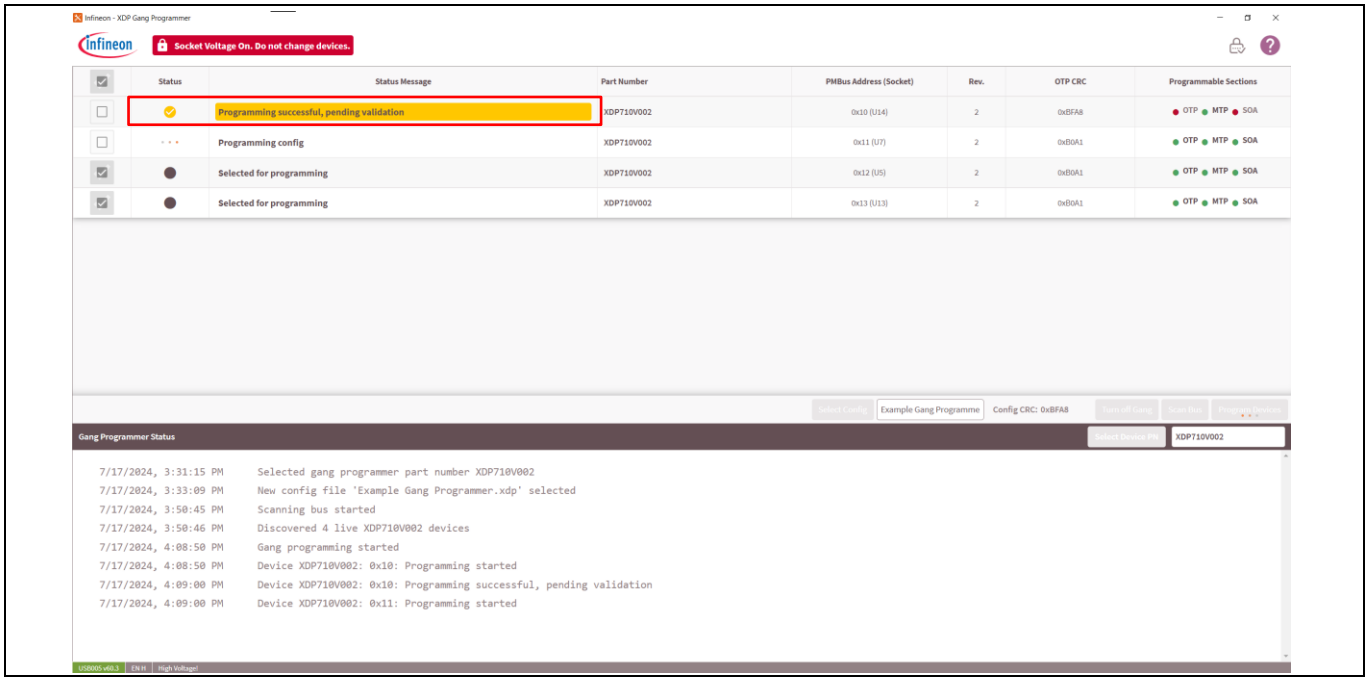

Figure 29 Device status during programming

Once all the devices are programmed, the following actions occur:

- The programmer reboots all the devices and validates the programmed configuration
- After the validation is complete, the socket voltage message indicating that the device is programmed correctly appears as shown in Figure 30
- OTP and SOA appear in red indicating that the device has been programmed and cannot be programmed again
- The socket voltage message on the top left turns green indicating that the boost regulator has turned off and it is safe to open the sockets and replace the devices

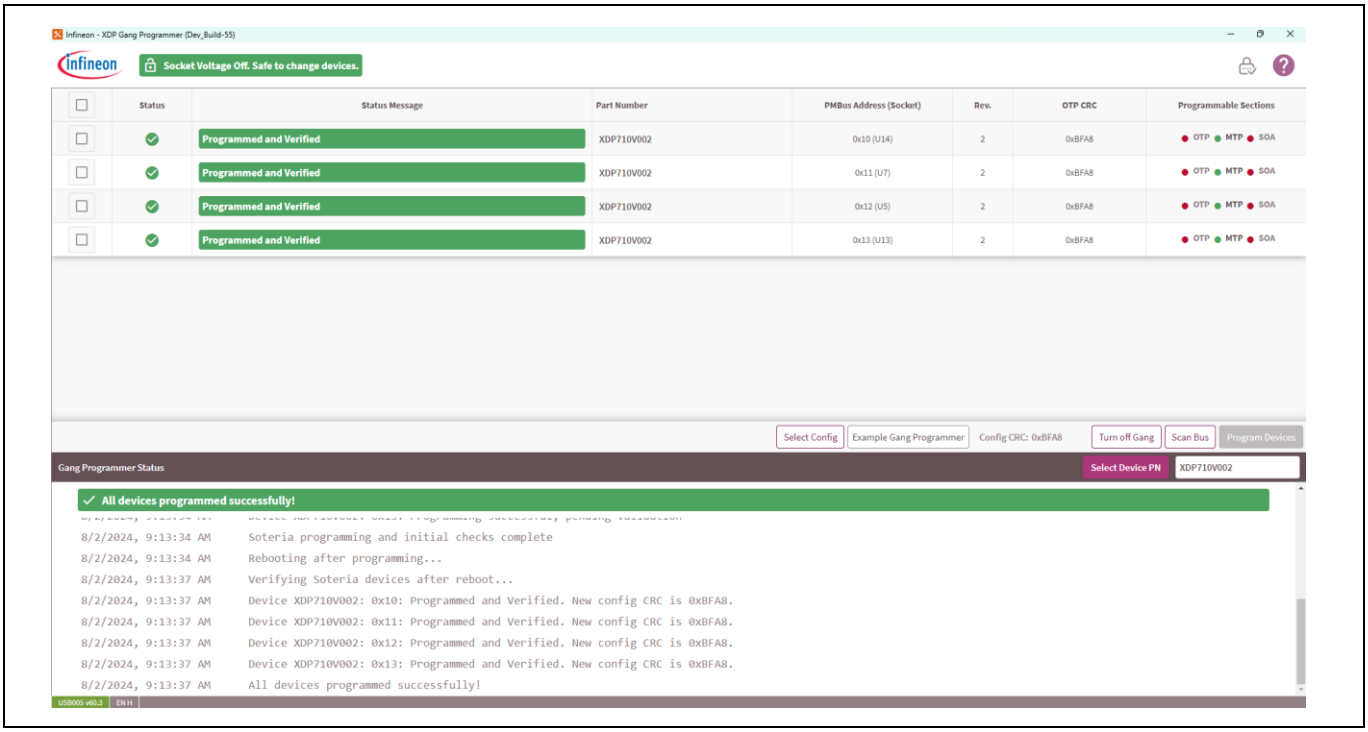

Figure 30 Successful programming of all four devices

- The green LEDs next to the sockets indicate that the programming is successful
- The red LED is off, indicating that it is safe to replace the devices as shown in Figure 31

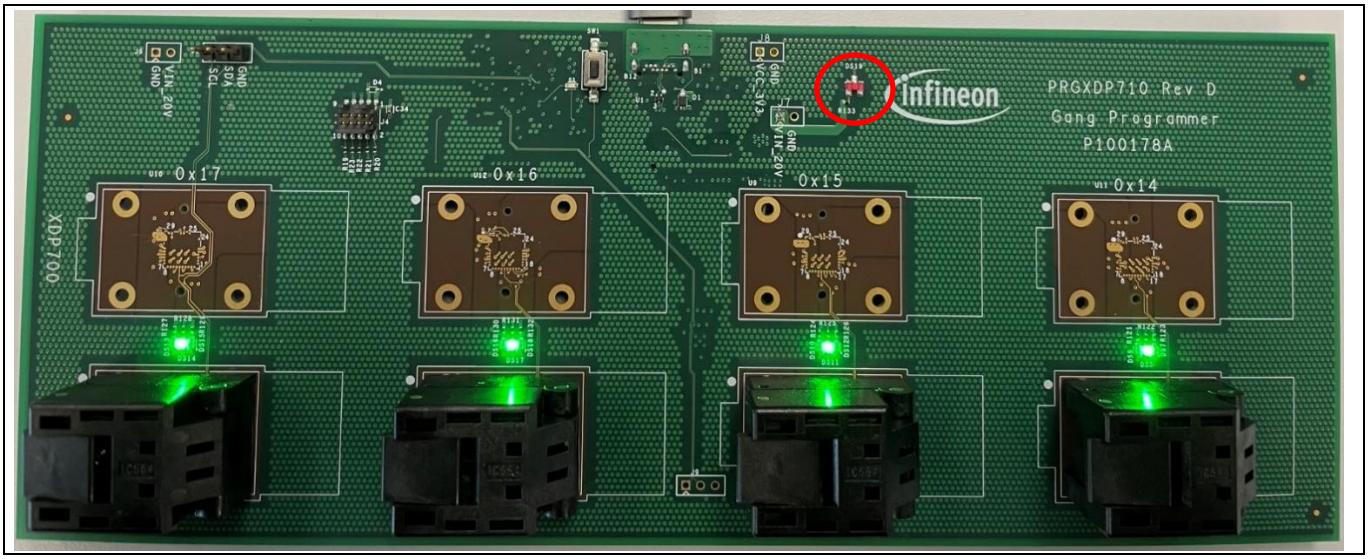

Figure 31 Successful programming of all four devices indicated by green LED

After safely removing the devices from the sockets, new devices can be installed. Ensure that the sockets are closed securely.

4.1.1 Trying to program already programmed devices

If the devices are already programmed (this could happen if the device is left into the socket or the user installs a programmed device), the GUI blocks them from getting programmed again by disabling the device selection button. The **Status** shows '⊘' sign indicating that the **Device already programmed** as shown in Figure 32.

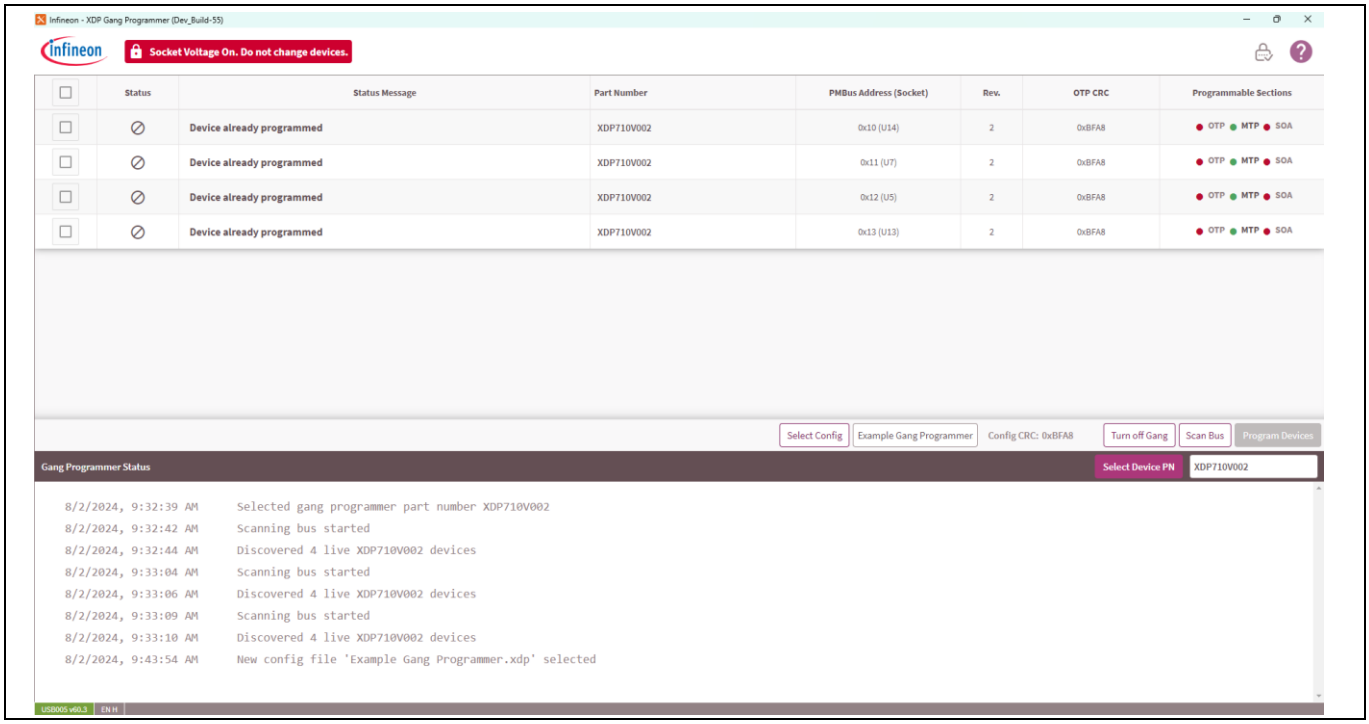

Figure 32 Scanning programmed devices

5 Programming failures due to loss of 22 V

If the voltage supplied by the boost regulator to the connected devices falls below 20 V, the device fails to execute OTP programming and GUI will show an error as “OTP programming has been blocked because of temperature or VIN out of range”. In this case, the voltage should be measured in between VIN_20V and GND pins as shown in Figure 33.

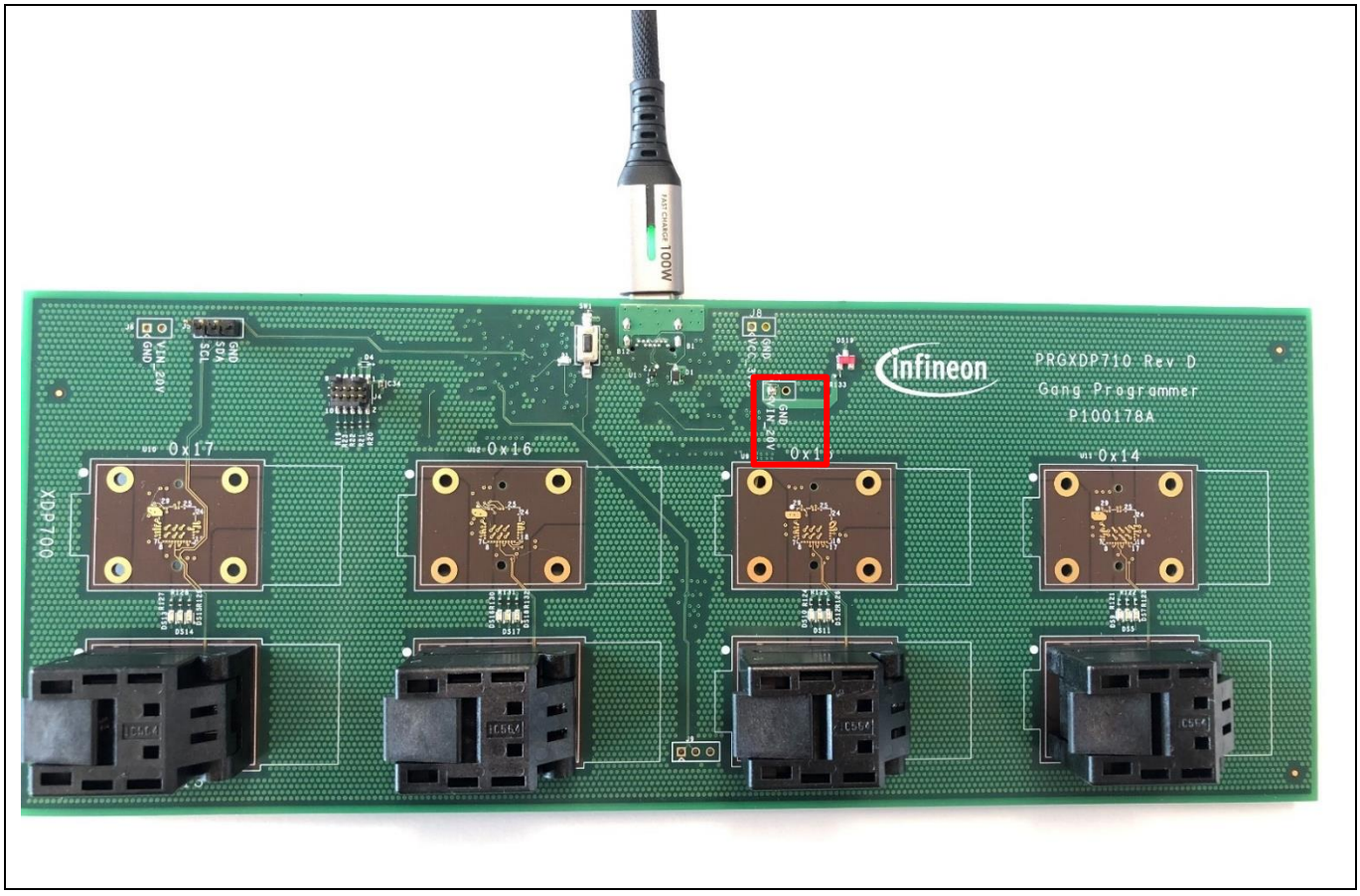

Figure 33 XDP7xx Gang Programmer board

References

Contact Infineon Support to obtain these documents.

[1] Infineon Technologies AG: *XDP711-001 hot-swap controller datasheet;* Available online

[2] Infineon Technologies AG: *XDP710-002 hot-swap controller datasheet;* Available online

[3] Infineon Technologies AG: *XDP700-002 hot-swap controller datasheet*; Available online

[4] Infineon Technologies AG: *XDP710-001 hot-swap controller datasheet*; Available online

[5] Infineon Technologies AG: *XDP7x0-002 configuration file translation and programming guide*; Available online

[6] Infineon Technologies AG: *XDP710-001 configuration file translation and programming guide*; Available online

[7] Infineon Technologies AG: XDP711-001; Available online

Revision history

Document revision	Date	Description of changes
V 1.0	2024-08-28	Initial release
V 1.1	2025-07-08	Added support for XDP711-001 and more programmer board options

Trademarks

All referenced product or service names and trademarks are the property of their respective owners.

PSOC™, formerly known as PSoC™, is a trademark of Infineon Technologies. Any references to PSoC™ in this document or others shall be deemed to refer to PSOC™.

Edition 2025-07-08

Published by

Infineon Technologies AG

81726 Munich, Germany

© 2025 Infineon Technologies AG. All Rights Reserved.

Do you have a question about this document?

Email: erratum@infineon.com

Document reference

UG203537

Warnings

Due to technical requirements products may contain dangerous substances. For information on the types in question please contact your nearest Infineon Technologies office.

Except as otherwise explicitly approved by Infineon Technologies in a written document signed by authorized representatives of Infineon Technologies, Infineon Technologies' products may not be used in any applications where a failure of the product or any consequences of the use thereof can reasonably be expected to result in personal injury.