iMOTION™ Motion Control Engine

Software Reference Manual

About this document

Scope and purpose

IMOTION™ IMC series devices are offering control of permanent magnet motors by integrating both hardware and software.

These devices can perform sensorless or sensor based Field-Oriented Control (FOC) over the full speed range of the motor, including stable control at deep field weakening speeds. MCE also offers Power Factor Correction (PFC). The iMOTION™ motor control software is offered under the name Motion Control Engine (MCE) hereafter.

The electrical, mechanical, timing and quality parameters of the iMOTION™ products are described in the respective data sheets. The data sheet also specifies the concrete IO pins for the functionalities described here.

This software reference manual describes various features supported by MCE and describes following topics:

- Application specific registers that are used to configure motor, PFC and power board parameters
- Guides through design, testing and optimization of application specific hardware
- Flux estimator, speed and current control loop tuning and optimize the motor start-up parameters
- Motor drive performance verification and troubleshooting methods

While this reference manual describes all of the features, protections and configuration options of the MCE, a concrete product might only implement a subset of this functionality. E.g. the power factor correction is only offered in dedicated devices. Please refer to the data sheet for more information.

Intended audience

This document is targeting user of iMOTION™ IMC series devices that uses the Motion Control Engine.

Table of contents

About this document **1**

Table of contents **1**

1 Introduction **7**

2 Software Description **9**

2.1 Motor Control -Sensorless FOC 9

2.1.1 State Handling 10

2.1.2 Bootstrap Capacitor Charge 13

2.1.3 Voltage measurement 13

2.1.4 Current measurement 14

2.1.4.1 Single Shunt Reconstruction 14

2.1.5 Low speed current limit 16

2.1.6 Protection 17

2.1.6.1 Flux PLL out-of-control protection 17

2.1.6.2 Rotor lock protection 17

2.1.6.3 Overcurrent Protection 18

2.1.6.4 Over Temperature Protection 18

2.1.6.5 Over / under voltage Protection 18

2.1.6.6 Phase Loss Protection 19
2.1.7 Catch Spin 19
2.1.7.1 Zero Speed Catch Spin 19
2.1.7.2 Forward Catch Spin 20
2.1.7.3 Reverse Catch Spin 21
2.1.8 Control Input 23
2.1.8.1 UART control 23
2.1.8.2 Vsp Analog Input 23
2.1.8.3 Frequency input 24
2.1.8.4 Duty Cycle Input Control 25
2.1.8.5 Automatic Restart 27
2.1.8.6 Forced control input change 27
2.2 Power Factor Correction 28
2.2.1 State Handling 30
2.3 User Mode UART 32
2.3.1 Data Frame 32
2.3.2 Node Address 32
2.3.3 Link Break Protection 32
2.3.4 Command 32
2.3.5 Checksum 33
2.3.6 UART message 33
2.3.6.1 Read Status: Command = 0x00 33
2.3.6.2 Clear Fault: Command =0x01 34
2.3.6.3 Change Control Input Mode: Command =0x02 34
2.3.6.4 Motor Control: Command =0x03 34
2.3.6.5 Register Read: Command = 0x05 34
2.3.6.6 Register Write: Command = 0x06 34
2.3.6.7 Load and Save Parameter: Command = 0x20 35
2.3.7 Connecting multiple nodes to same network 35
2.4 Multiple Parameter Programming 36
2.4.1 Parameter Page Layout 36
2.4.2 Parameter Block Selection 36
2.4.2.1 Direct Select 36
2.4.2.2 UART Control 36
2.4.2.3 Analog Input 36
2.4.2.4 GPIO Pins 37
2.4.3 Parameter load fault 38
3 Register Description 39
3.1 System Control Register (App ID =0) 39
3.1.1 ParPageConf 39
3.1.2 SysTaskTime 39
3.1.3 CPU Load 39
3.1.4 FeatureID_selectH 40
3.1.5 GKConf 40
3.1.6 SW_Version 40
3.2 Motor Control Register (App ID =1) 41
3.2.1 Control Register Group 45
3.2.1.1 HwConfig 45
3.2.1.2 SysConfig 46
3.2.1.3 AngleSelect 46
3.2.1.4 CtrlModeSelect 46
3.2.1.5 APPConfig 47
3.2.1.6 PrimaryControlRate 47

3.2.1.7 Command 47
3.2.1.8 SequencerState 48
3.2.2 PWM Register Group 48
3.2.2.1 PwmFreq 48
3.2.2.2 PWMDeadtimeR 48
3.2.2.3 PWMDeadtimeF 49
3.2.2.4 SHDelay 49
3.2.2.5 TMinPhaseShift 49
3.2.2.6 TCntMin 50
3.2.2.7 PwmGuardBand 50
3.2.2.8 Pwm2PhThr 50
3.2.3 Speed Control Register Group 51
3.2.3.1 KpSreg 51
3.2.3.2 KxSreg 51
3.2.3.3 MotorLim 51
3.2.3.4 RegenLim 51
3.2.3.5 RegenSpdThr 52
3.2.3.6 LowSpeedLim 52
3.2.3.7 LowSpeedGain 52
3.2.3.8 SpdRampRate 52
3.2.3.9 MinSpd 53
3.2.3.10 TargetSpeed 53
3.2.3.11 TrqRef 53
3.2.4 Flux Estimation PLL Register Group 54
3.2.4.1 Rs 54
3.2.4.2 Lo 54
3.2.4.3 LSIncy 54
3.2.4.4 VoltScl 55
3.2.4.5 PllKp 55
3.2.4.6 PllKi 55
3.2.4.7 PllFreqLim 56
3.2.4.8 FlxTau 56
3.2.4.9 AtanTau 57
3.2.4.10 AngMTPA 57
3.2.4.11 SpdFiltBW 57
3.2.4.12 SpeedScale 57
3.2.4.13 MotorSpeed 58
3.2.4.14 FluxAngle 58
3.2.4.15 Flx_M 58
3.2.4.16 Abs_MotorSpeed 58
3.2.4.17 OpenLoopAngle 58
3.2.5 FOC Register Group 59
3.2.5.1 IfbkScl 59
3.2.5.2 KpIreg 59
3.2.5.3 KpIregD 59
3.2.5.4 KxIreg 60
3.2.5.5 FwkVoltLvl 60
3.2.5.6 FwkKx 60
3.2.5.7 FwkCurRatio 60
3.2.5.8 VdqLim 61
3.2.5.9 AngDel 61
3.2.5.10 AngLim 62
3.2.5.11 IdqFiltBw 62

3.2.5.12 IdRef_Ext 62
3.2.5.13 IqRef_Ext 62
3.2.5.14 IdFilt 63
3.2.5.15 IqFilt 63
3.2.5.16 IdFwk 63
3.2.5.17 Id 63
3.2.5.18 Iq 63
3.2.5.19 MotorCurrent 64
3.2.6 Measurement Register Group 64
3.2.6.1 Iu 64
3.2.6.2 Iv 64
3.2.6.3 IW 64
3.2.6.4 I_Alpha 65
3.2.6.5 I_Beta 65
3.2.6.6 VdcRaw 65
3.2.6.7 VdcFilt 65
3.2.6.8 VTH 65
3.2.7 Protection Register Group 66
3.2.7.1 FaultEnable 66
3.2.7.2 DcBusOvLevel 66
3.2.7.3 DcBusLvLevel 66
3.2.7.4 CriticalOvLevel 67
3.2.7.5 RotorLockTime 67
3.2.7.6 PLL_OutSyncTime 67
3.2.7.7 GateKillFilterTime 67
3.2.7.8 CompRef 68
3.2.7.9 Tshutdown 68
3.2.7.10 PhaseLossLevel 68
3.2.7.11 SwFaults 68
3.2.7.12 FaultClear 69
3.2.7.13 FaultFlags 69
3.2.8 Start Control Register Group 70
3.2.8.1 BTS_Chargetime 70
3.2.8.2 TCatchSpin 70
3.2.8.3 DirectStartThr 70
3.2.8.4 ParkAngle 70
3.2.8.5 ParkTime 71
3.2.8.6 OpenLoopRamp 71
3.2.8.7 IS_Pulses 71
3.2.8.8 IS_Duty 72
3.2.8.9 IS _IqInit 72
3.2.9 Control Input Register Group 73
3.2.9.1 PGDeltaAngle 73
3.2.9.2 CmdStart 73
3.2.9.3 CmdStop 74
3.2.9.4 CmdGain 74
3.2.10 Voltage Control Register Group 74
3.2.10.1 Vd_Ext 74
3.2.10.2 Vq_Ext 74
3.2.10.3 V_Alpha 75
3.2.10.4 V_Beta 75
3.2.10.5 Vd 75
3.2.10.6 Vq 75

3.2.10.7 MotorVoltage 75
3.2.11 Torque Compensation Register Group 76
3.2.11.1 TrqCompLim 76
3.2.11.2 TrqCompOnSpeed 76
3.2.11.3 TrqCompOffSpeed 76
3.3 PFC Control Register (App ID =3) 77
3.3.1 Control Register Group 79
3.3.1.1 PFC_HwConfig 79
3.3.1.2 PFC_SysConfig 80
3.3.1.3 PFC_ SequencerState 80
3.3.1.4 PFC_Command 80
3.3.2 PWM Register Group 81
3.3.2.1 PFC_PwmFreq 81
3.3.2.2 PFC_TMinOff 81
3.3.2.3 PFC_Deadtime 81
3.3.2.4 PFC_SHDelay 81
3.3.3 Voltage Control Register Group 82
3.3.3.1 PFC_IRectLim 82
3.3.3.2 PFC_IGenLim 82
3.3.3.3 PFC_VdcRampRate 82
3.3.3.4 PFC_KpVreg 83
3.3.3.5 PFC_KxVreg 83
3.3.3.6 PFC_TargetVolt 83
3.3.3.7 PFC_VoltagePIoutput 83
3.3.4 Current Control Register Group 84
3.3.4.1 PFC_KpIreg 84
3.3.4.2 PFC_KxIreg 84
3.3.4.3 PFC_AcDcScale 84
3.3.4.4 PFC_LFactor 85
3.3.4.5 PFC_CurrentPIoutput 85
3.3.5 Protection Register Group 85
3.3.5.1 PFC_GateKillTime 85
3.3.5.2 PFC_VacOvLevel 85
3.3.5.3 PFC_VacLvLevel 86
3.3.5.4 PFC_VdcOvLevel 86
3.3.5.5 PFC_VdcLvLevel 86
3.3.5.6 PFC_FaultEnable 87
3.3.5.7 PFC_FaultClear 87
3.3.5.8 PFC_SwFaults 87
3.3.5.9 PFC_FaultFlags 88
3.3.6 Measurement Register Group 88
3.3.6.1 PFC_VdcRaw 88
3.3.6.2 PFC_VdcFilt 88
3.3.6.3 PFC_IpfcRaw 89
3.3.6.4 PFC_IpfcAvg 89
3.3.6.5 PFC_IpfcRMS 89
3.3.6.6 PFC_VacRaw 89
3.3.6.7 PFC_AbsVacRaw 89
3.3.6.8 PFC_VacRMS 90
3.3.6.9 PFC_ACPower 90
4 Motor Tuning 91
4.1 How to check if the current sensing is good 91
4.2 Current regulator tuning 92

4.3 Difficult to start the motor....96
4.4 Motor speed not stable....96
4.5 Motor current not stable in field weakening....96
4.6 Reducing acoustic noise....96
5 Revision history....97

1 Introduction

This document describes the iMOTION™ software for motor control, power factor correction and additional functions. Key features of this software are listed below.

- Sensorless FOC control: High performance sensorless Field Oriented Control (FOC) of Permanent Magnet Synchronous Motor (surface mounted and interior mount magnet motors) utilizing fast ADC, integrated op-amps, comparator and motion peripherals of iMOTION™ device.
- Angle sensing for initial rotor angle detection: Together with direct closed-loop start, initial angle sensing improves motor start performance.
- Single shunt or leg shunt motor current sensing: Provide unique single shunt and leg shunt current reconstruction. Integrated op-amps with configurable gain and A/D converter enable a direct shunt resistor interface to the iMOTION™ device while eliminating additional analog/digital circuitry. Single shunt option can use either minimum pulse method or the phase shift method. Phase Shift PWM provides better startup and low speed performance in single shunt configuration.
- Support 3ph and 2ph PWM modulation: 2ph SVPWM (Type-3) that allows reduction of the switching losses compared with three-phase SVPWM (symmetrical placement of zero vectors).
- Enhanced flux based control algorithm which provides quick and smooth start: The direct closed-loop control of both torque and stator flux are achieved using proportional-integral controllers and space vector modulation with over modulation strategy.
- Supports Boost Mode and Totem-Pole Power Factor Correction (PFC).
- Networking capability with user mode UART: Master and slave mode available, with up to 15 nodes and each node has its own address. Broadcast feature available to update all the slaves at once.
- 15 re-programmable parameter blocks: 15 configuration blocks can be programmed to save the control parameters and each parameter block is 256 bytes in size. Each block can be programmed individually or all 15 blocks at the same time using MCEDesigner.
- Multiple motor parameter support: Each parameter block can be assigned to different motors or hardware platforms.

Table 1 List of Motor Control and Common Protection

Type of Protection	Description
Gatekill	This fault is set when there is over current and shutdown the PWM. This fault cannot be masked.
Critical Over Voltage	This fault is set when the voltage is above a threshold; all low side switches are clamped (zero-vector-braking) to protect the drive and brake the motor. The zero-vector is held until fault is cleared. This fault cannot be masked.
DC Over Voltage	This fault is set when the DC Bus voltage is above a threshold.
DC Under Voltage	This fault is set when the DC Bus voltage is below a threshold.
Flux PLL Out Of Control	This fault is set when motor flux PLL is not locked which could be due to wrong parameter configuration.
Over Temperature	This fault is set when the temperature is above a threshold.
Rotor Lock	This fault is set when the rotor is locked
Execution	This fault occurs if the CPU load is more than 95%.
Phase Loss	This fault is set if one or more motor phases are not connected
Parameter Load	This fault occurs when parameter block in flash is faulty.
Link Break Protection	This fault is set when there is no UART communication for a defined time limit.

Table 2 List of PFC Protection

Type of Protection	Description
Gatekill	This fault is set when there is over current and shutdown PWM. Cannot be masked.
DC Over Voltage	This fault is set when the DC Bus voltage is above a threshold.
DC Under Voltage	This fault is set when the DC Bus voltage is under a threshold.
AC over voltage	This fault is set when the AC input voltage to PFC is above a threshold.
AC under voltage	This fault is set when the AC input voltage to PFC is below a threshold.
Frequency fault	This fault is set when AC input frequency value to PFC is different from set value
Parameter Load	This fault occurs when wrong values in parameter block in the flash.

2 Software Description

This section describes MCE motor control and power factor correction features and functions.

2.1 Motor Control -Sensorless FOC

Sensorless Field Oriented Control (FOC) software supports to drive both types of Permanent Magnet Synchronous Motors (PMSM) i.e. constant air-gap surface mount magnet motor and interior mount magnet motors with variable-reluctance. Sensorless FOC algorithm structure is described in Figure 1 . The implementation follows the well-established cascaded control structure, with outer speed loop and inner current control loops that vary the motor windings voltages to drive the motor at the target speed. The field weakening block extends the speed range of the drive.

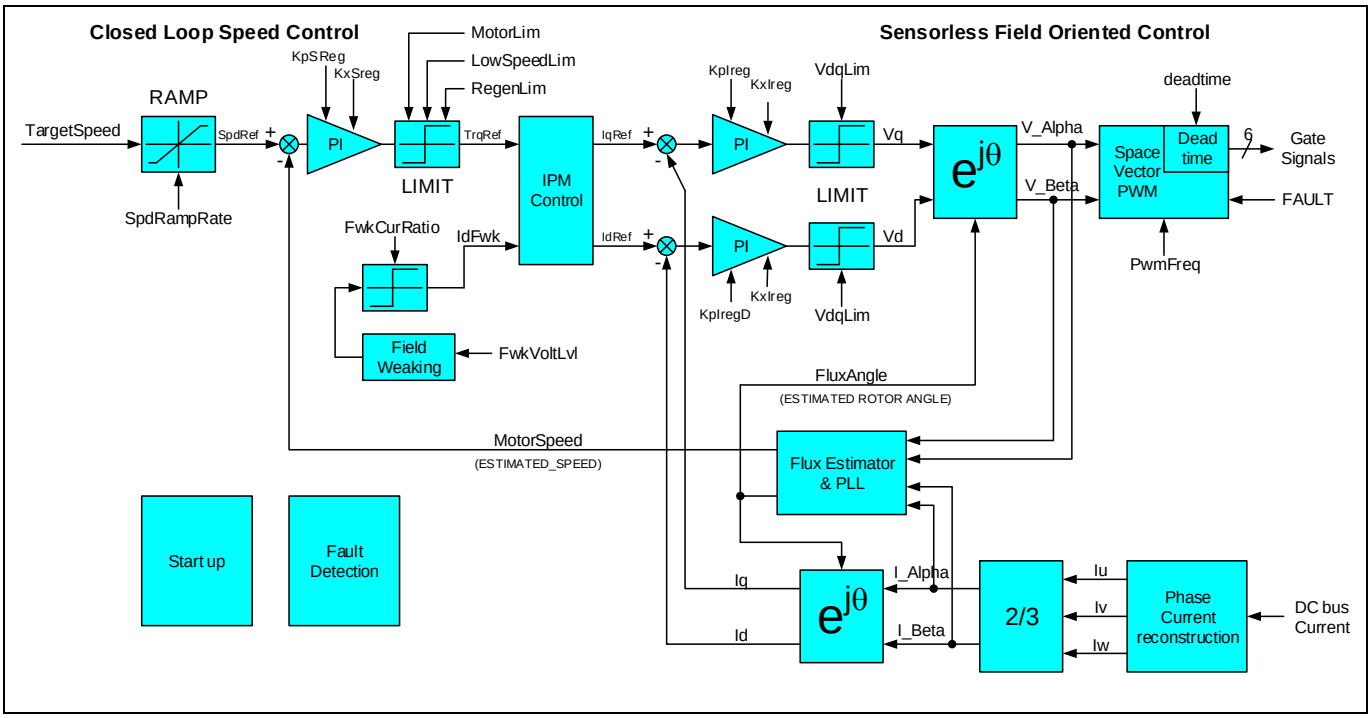

Figure 1 Top level diagram of speed control loop and sensorless FOC

The speed controller calculates the motor torque required to follow the target speed. While the current loops drive the motor currents needed to generate this torque. The proportional plus integral (PI) speed loop compensator acts on the error between the target speed and the actual (estimated) speed. The integral term forces the steady state error to zero while the proportional term improves the high frequency response. The PI compensator gains are adjusted depending on the motor and load characteristics to meet the target dynamic performance. The limiting function on the output of the PI compensator prevents integral windup and maintains the motor currents within the motor and drive capability.

The current loops calculate the inverter voltages to drive the motor currents needed to generate the desired torque. Field oriented control (FOC) uses the Clarke transform and a vector rotation to transform the motor winding currents into two quasi dc components, an I_d component that reinforces or weakens the rotor field and an I_q component that generates motor torque.

Two separate regulators control the I_d and I_q currents and a forward vector rotation transforms the current loop output voltages V_d and V_q into the two phase ac components (V_α and V_β). The Space Vector Pulse Width Modulator (SVPWM) generates the three phase power inverter switching signals based on the V_α and V_β voltage inputs.

Typically, the I_q controller input is the torque reference from the speed controller and the I_d reference current is set to zero. However, above a certain speed, known as the base speed, the inverter output voltage becomes limited by the dc bus voltage. In this situation, the field weakening controller generates a negative I_d to oppose the rotor magnet field that reduces the winding back EMF. This enables operation at higher speeds but at a lower torque output. The controller includes a compensator that adjusts the I_d current to maintain the motor voltage magnitude within the bus voltage limit.

The rotor magnet position estimator consists of a flux estimator and PLL. Flux is calculated based on feedback current, estimated voltages (based on dc bus feedback voltage and modulation index) and motor parameters (inductance and resistance). The output of the flux estimator represents rotor magnet fluxes in Alpha-Beta (stationary orthogonal frame, u-phase aligned with Alpha) two-phase quantities. The angle and frequency phase locked loop (PLL) estimates the flux angle and speed from the rotor magnet flux vector in Alpha-Beta components. The vector rotation calculates the error between the rotor flux angle and the estimated angle. The PI compensator and integrator in the closed loop path force angle and frequency estimate to track the angle and frequency of the rotor flux. The motor speed is derived from the rotor frequency according to the number of rotor poles.

When driving an interior permanent magnet (IPM) motor the rotor saliency can generate a reluctance torque component to augment the torque produced by the rotor magnet. When driving a surface magnet motor, there is zero saliency (L_d=L_q) and I_d is set to zero for maximum efficiency. In the case of IPM motor which has saliency (L_d< L_q) a negative I_d will produce positive reluctance torque. The most efficient operating point is when the total torque is maximized for a given current magnitude.

2.1.1 State Handling

The Motion Control Engine includes a built-in state machine that takes care of all state-handling for starting, stopping and performing start-up. A state machine function is executed every 1ms. Totally there are 10 states; each state has a value between 0-9, current state of sequencer is stored in "SequencerState " variable.

Table 3 State Description and Transition

State No	Sequence State	State Functionality	Transition Event	Next Sequence State
0	IDLE	After the controller power up, control enters into this state. If there is no valid parameter block, sequencer stays in this state.	Parameters are loaded successfully.	STOP
1	STOP	Wait for start command. Current and voltage measurement are done for protection.	Current Amplifier offset calculation is not done.	OFFSETCAL
			Start Command.	BTSCHARGE
2	OFFSETCAL	Offset calculation for motor current sensing input. This state takes 8192 PWM cycles.	Current offset calculation completed.	STOP
3	BTSCHARGE	Boot strap capacitor pre-charge. Current and voltage measurement are done for protection.	Bootstrap capacitor charge completed.	CATCHSPIN
4	MOTORRUN	Normal motor run mode	Stop Command	STOP

State No	Sequence State	State Functionality	Transition Event	Next Sequence State
5	FAULT	If any fault detected, motor will be stopped (if it was previously running) and enter FAULT state from any other state.	In UART control mode, Fault clear command by writing 1 to "FaultClear" variable	STOP
			In Frequency/ Duty/ VSP input control modes, after 10 seconds.	STOP
6	CATCHSPIN	Flux estimator and flux PLL are running in order to detect the rotor position and measure the motor speed of free running motor. Speed regulator is disabled and the Id & Iq current commands are set to 0.	Measured absolute motor speed is above threshold ("DirectStartThr" parameter)	MOTORRUN
			Measured absolute motor speed is less threshold ("DirectStartThr" parameter)	ANGLESENSING
			Switch to next state if "TCatchSpin" register value is set to zero.	ANGLESENSING
7	PARKING	Parking state is to align the rotor to a known position by injecting a linearly increased current. The final current amplitude is decided by low speed current limit. Total time duration of this state is configured by "ParkTime" register.	Parking completed	OPEN_LOOP
			Switch to next state immediately if "ParkTime" parameter is set to zero.	OPEN_LOOP
8	OPENLOOP	Move the rotor and accelerate from speed zero to MinSpd by using open loop angle. Flux estimator and flux PLL are executed in this state in order to provide smooth transition to MOTOR_RUN state. Speed acceleration of the open loop angle is configured by "OpenLoopRamp" register.	Speed reaches "MinSpd" register value	MOTOR_RUN
			Switch to next state immediately if "OpenLoopRamp" parameter is set to zero	MOTOR_RUN
9	ANGLESENSING	Measure the initial rotor angle. The length of each sensing pulse is configured by "IS_Pulses" (in PWM cycles) register.	Angle Sensing completed	MOTORRUN
			Switch to next state immediately if "IS_Pulses" parameter is set to zero	PARKING

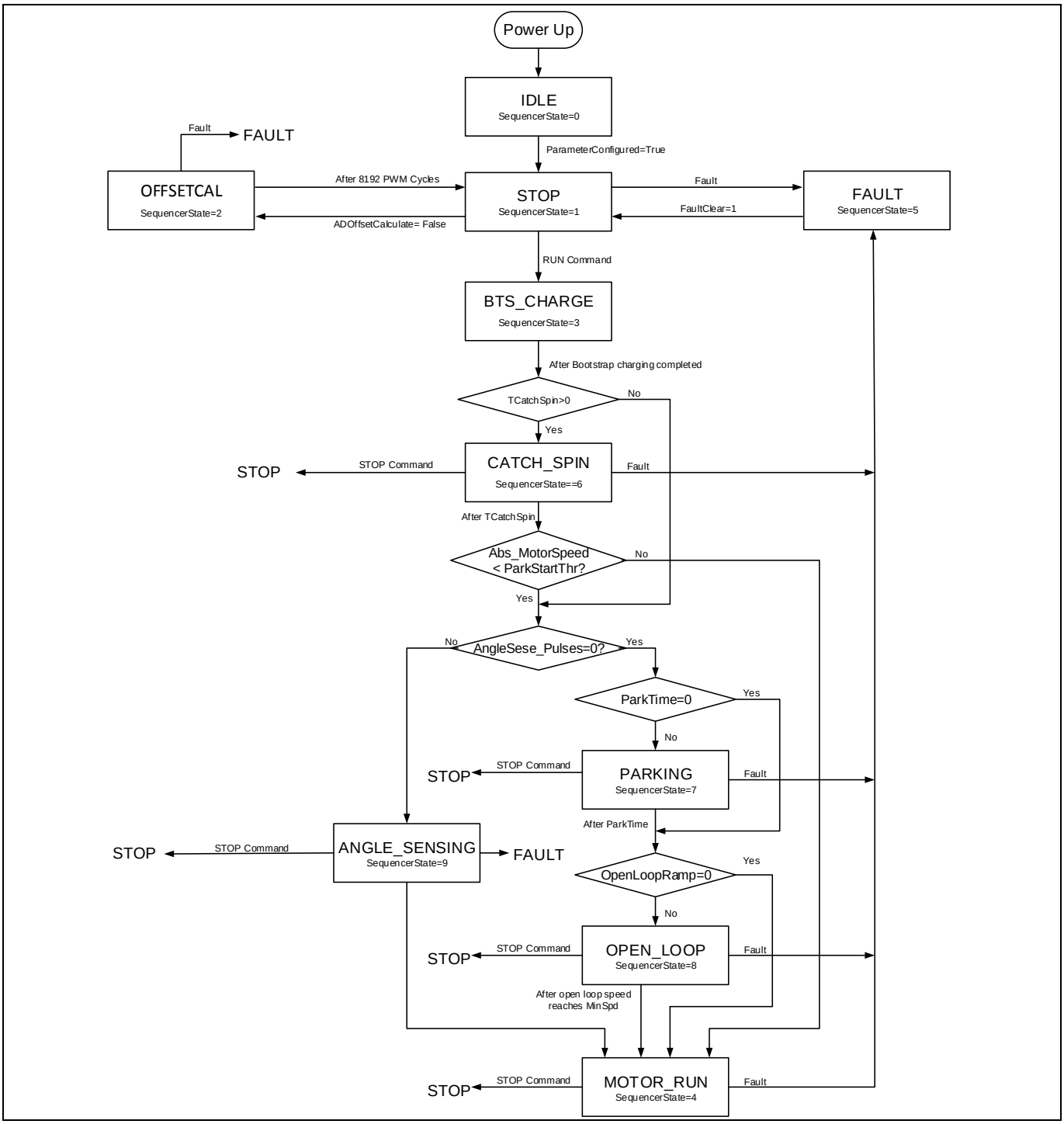

Figure 2 State handling and start control flow chart

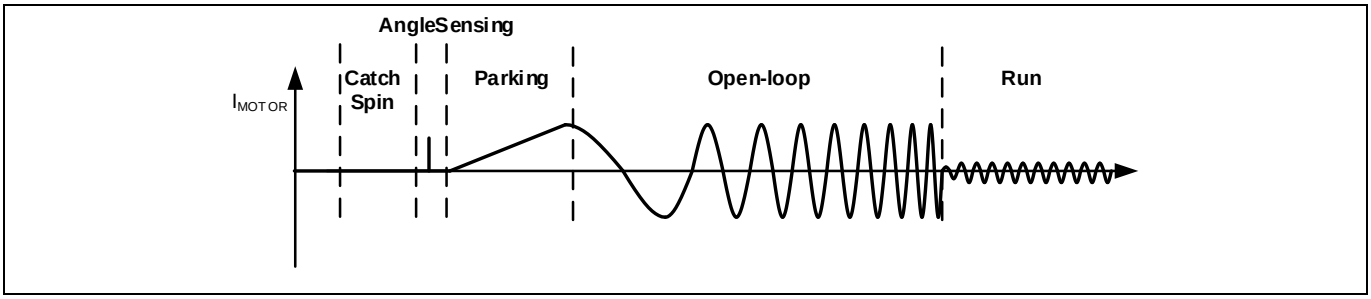

Figure 3 Motor start waveform

2.1.2 Bootstrap Capacitor Charge

Bootstrap capacitors are charged by turn on all three low side switches. The charging current is limited by the built-in pre-charge control function.

Instead of charging all low side devices simultaneously, the gate pre-charge control will schedule an alternating (U, V, W phase) charging sequence. Each phase charge bootstrap capacitor 1/3 of PWM time.

Figure 4 illustrates the PWM signal during bootstrap capacitor charge state.

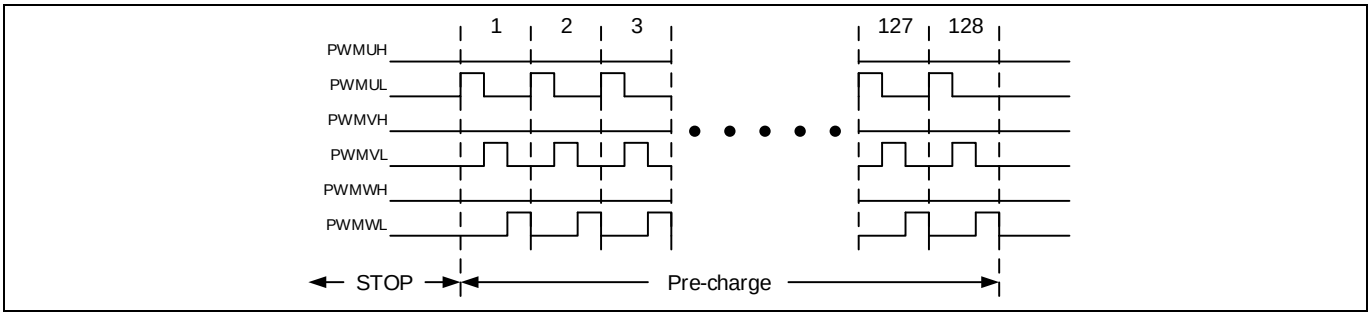

Figure 4 Bootstrap Capacitor Pre-charge

Total charge time for each phase can be calculated: $T_{Charge} = \frac{128}{3*F_{PWM}}$ if pre-charge takes 128 PWM cycles.

For example, if PWM frequency is 10 kHz, minimum charge time of each phase will be: $\frac{128}{3*10000} = 4.267(\mathrm{mS})$.

2.1.3 Voltage measurement

The measurement of the DC link voltage of the inverter board is required for voltage protection and DC bus voltage compensation. The voltage is measured at every PWM cycle. DC link voltage of the inverter is measurement via voltage divider circuit using 12-bit ADC. Measured DC bus voltage is represented in 12 bit format.

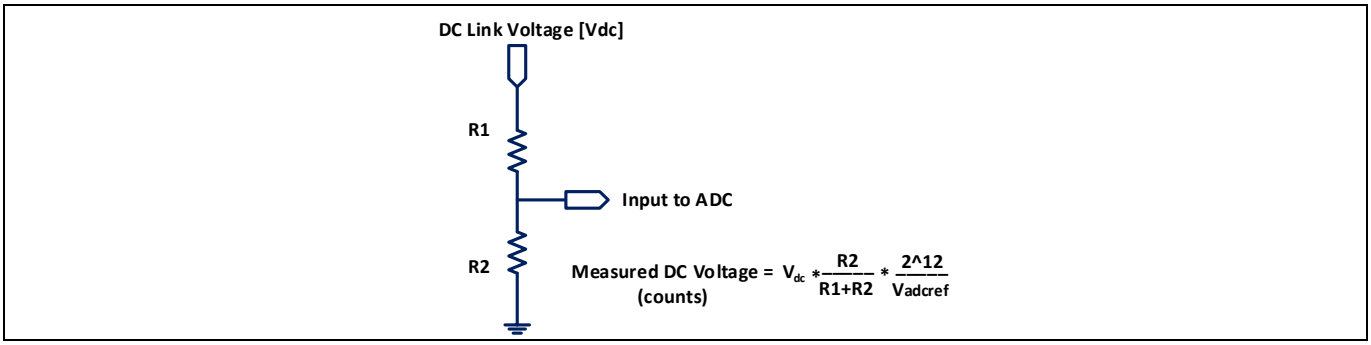

Figure 5 DC Bus voltage feedback signal path

Example: R1 = 2MΩ, R2 = 13.3kΩ, V_{adcref}= 3.3V and V_{dc} = 320V; Measured DC bus voltage = 2623 counts

Attention: ***In MCEWizard R1 and R2 values shall be configured as per actual hardware used. Wrong configuration may lead to wrong under voltage/over voltage/ Critical over voltage fault or over voltage/under voltage/ critical over voltage conditions may not be detected correctly.***

2.1.4 Current measurement

In order to implement sensor-less field oriented control, it is crucial to measure the motor winding currents precisely. Motor phase current values are used for current control and flux estimator. Current is measured at every PWM cycle. Two types of current measurements are supported in this software.

1. Leg Shunt Measurement : Two Phase current measurement
2. Single shunt Measurement

The internal amplifiers are used for current measurement, no external opamp is required. Internal amplifier gain can be configured using MCEWizard. Current input offset is measured in the "OFFSETCAL" state.

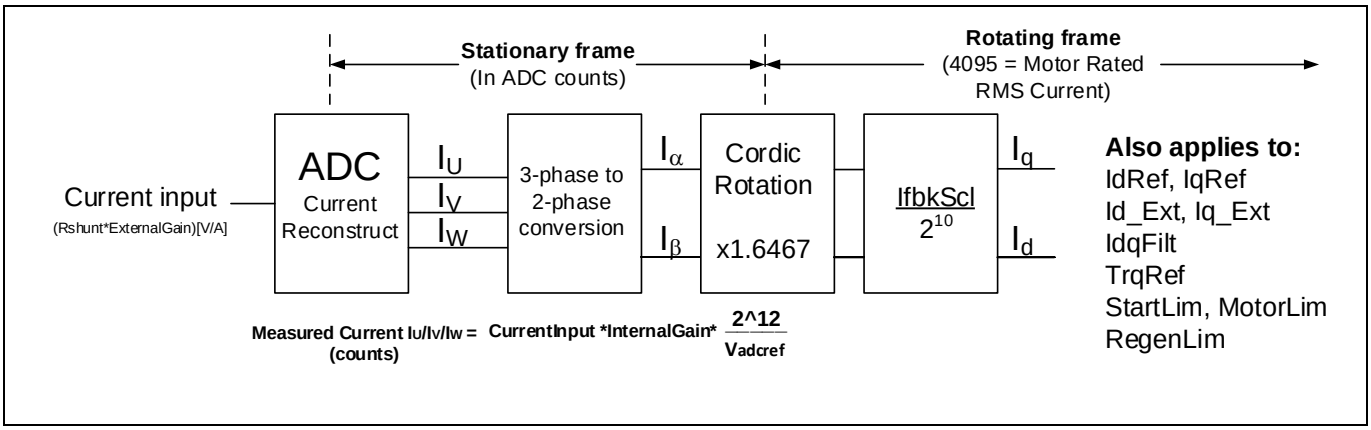

Figure 6 Motor current feedback signal path

Attention: ***In MCEWizard current input value shall be configured as per actual hardware used. Wrong configuration may lead to wrong over current fault or over current conditions may not be detected correctly.***

2.1.4.1 Single Shunt Reconstruction

The space vector modulator also generates trigger signals for current measurement. Motor current reconstruction circuit measures the DC link current in the shunt resistor during the active vectors of the PWM cycle. In each PWM cycle, there are two different active vectors and the DC link current in each active vector represents current on one motor phase. The calculation of the third phase current value is possible because at balanced condition the sum of all the three winding currents is zero.

2.1.4.1.1 Minimum Pulse Width

In single shunt reconstruction method, the current through one of the phases can be sensed across the shunt resistor during each active vector. However, under certain operating conditions i.e. when the resultant vector is at sector crossovers or when the length of the resultant vector is low (low modulation index); the duration of one or both active vectors is too narrow to guarantee reliable extraction of winding current data. These operating conditions are shaded in the space vector diagram shown in Figure 7. In order to guarantee reliable extraction of winding current, a minimum pulse width limit is imposed on each active vector in a PWM cycle. This minimum time is set by the parameter "TcntMin". For an optimal control performance in this mode, SHDelay parameter must be tuned.

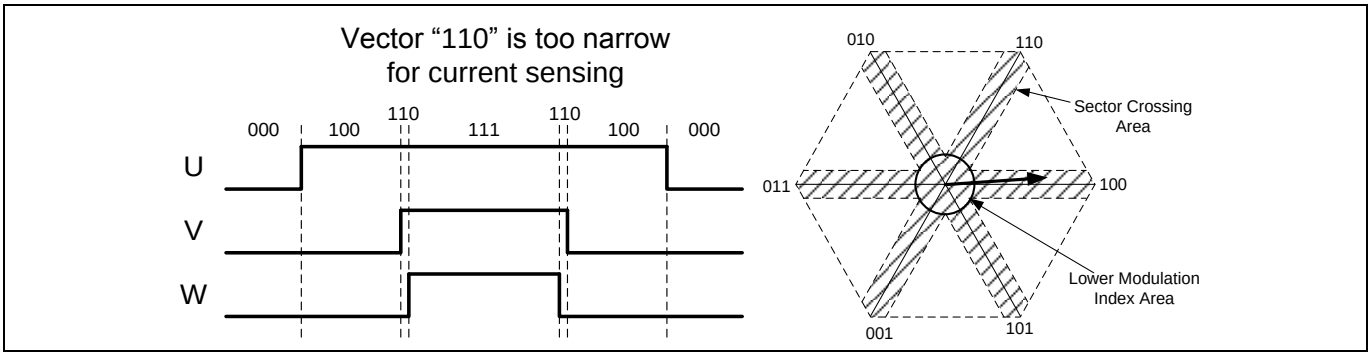

Figure 7 Narrow pulse limitation of single shunt current sensing

2.1.4.1.2 Minimum Pulse Limit and Phase Shift PWM

In single shunt configuration, motor current can only be sensed during active vector. In order to allow the ADC to accurately sense the current, each active vector must be ON for a minimum length of time. This imposes a limit on the minimum pulse width of each PWM cycle. This minimum pulse width restriction leads to distortion at lower modulation index or when the resultant voltage vector is transitioning from one sector to another. The resulting distortion may cause audible noise, especially at lower speeds. The shaded regions in the space vector diagram shown in Figure 7 mark the areas which introduce voltage distortion.

Figure 8 illustrates the resulting distortion when the resultant voltage vector is transitioning from one sector to another. Due to minimum pulse width limitation, there is a difference between target output and actual output at sector crossovers. This distortion results in acoustic noise and degradation of control performance.

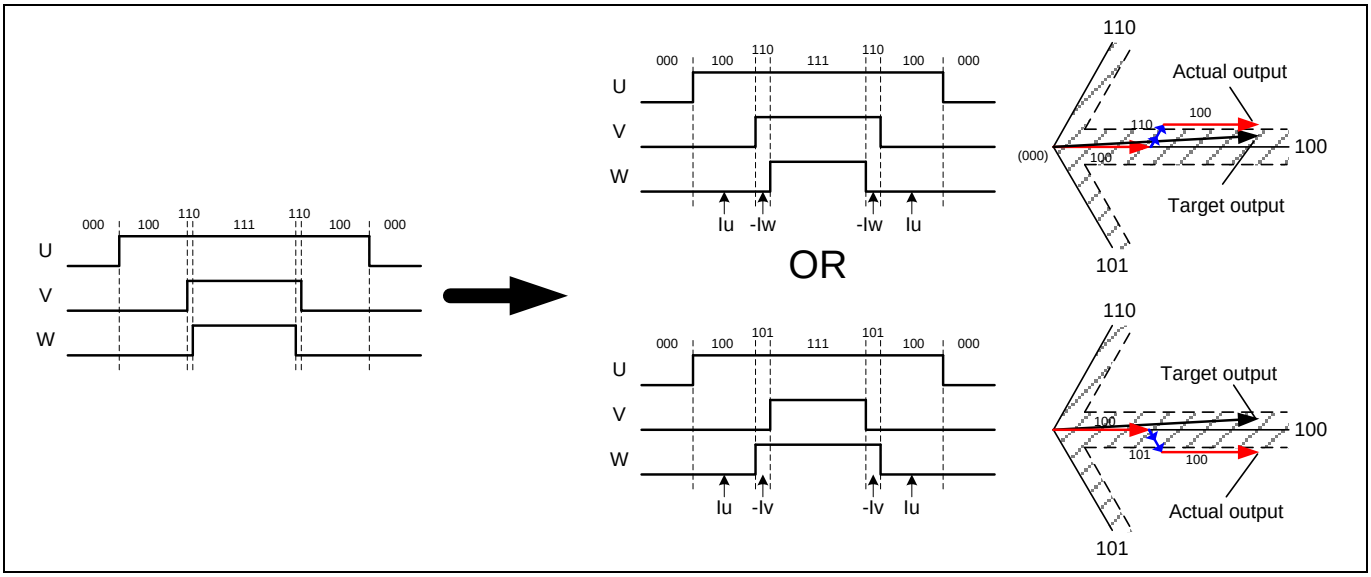

Figure 8 Minimum pulse scheme limitation

In order to eliminate the minimum pulse limitation, MCE provides Phase Shift PWM. In phase shift PWM, the output of each PMW is not always center aligned, it is shifted left to create enough ADC sample time. Figure 9 shows the W phase PWM has been shifted left to create enough time for vector “110”. It can be observed in Figure 9 that the PWM phase shift adds an additional active vector i.e. 101. However, the impact of this additional vector is cancelled due to extension of vector 110 and shrinking of vector 100.

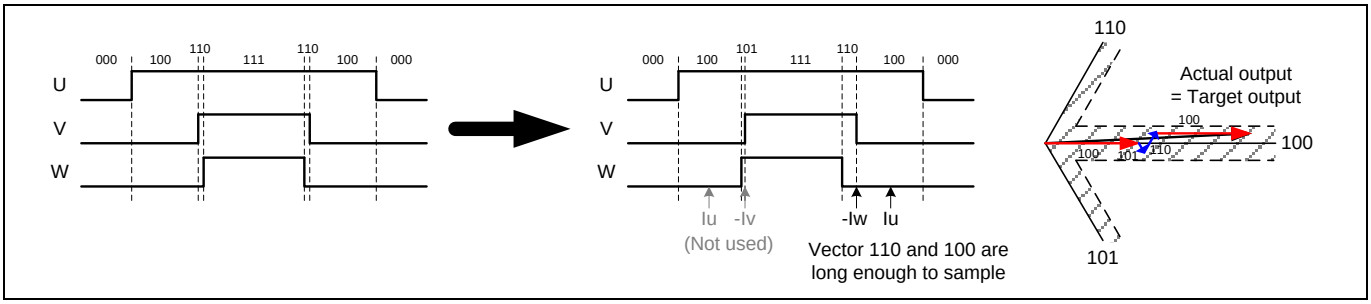

Figure 9 Phase Shift PWM scheme

By using phase shift scheme, the actual output during each cycle will be exactly the same as target output. Control performance at low speed can be improved. The amount of phase shift in the PWM is set by configuring TMinPhaseShift parameter. For an optimal control performance in this mode, TminPhaseShift and SHDelay parameter must be tuned.

2.1.5 Low speed current limit

Some applications (such as fan) don't require high current at low speed, in another words, full torque is only required above certain speed. MCE provides low speed current limit feature which reduce current limit in low speed region for smooth startup. This feature provides smooth and quiet start up, and it also can reduce rotor lock current.

When motor speed is below minimum speed ($|MotorSpeed| \leq MinSpd$), motor current is limited by "LowSpeedLim" parameter.

Motor current limit increases with increase in motor speed, actual limit current calculated by MCE and its gain is specified by "LowSpeedGain" parameter.

When motor is running at high speed ($|MotorSpeed| \geq Low\ Speed\ Threshold$), motor limit current becomes "MotorLim".

Figure 10 illustrates how low speed current limit works.

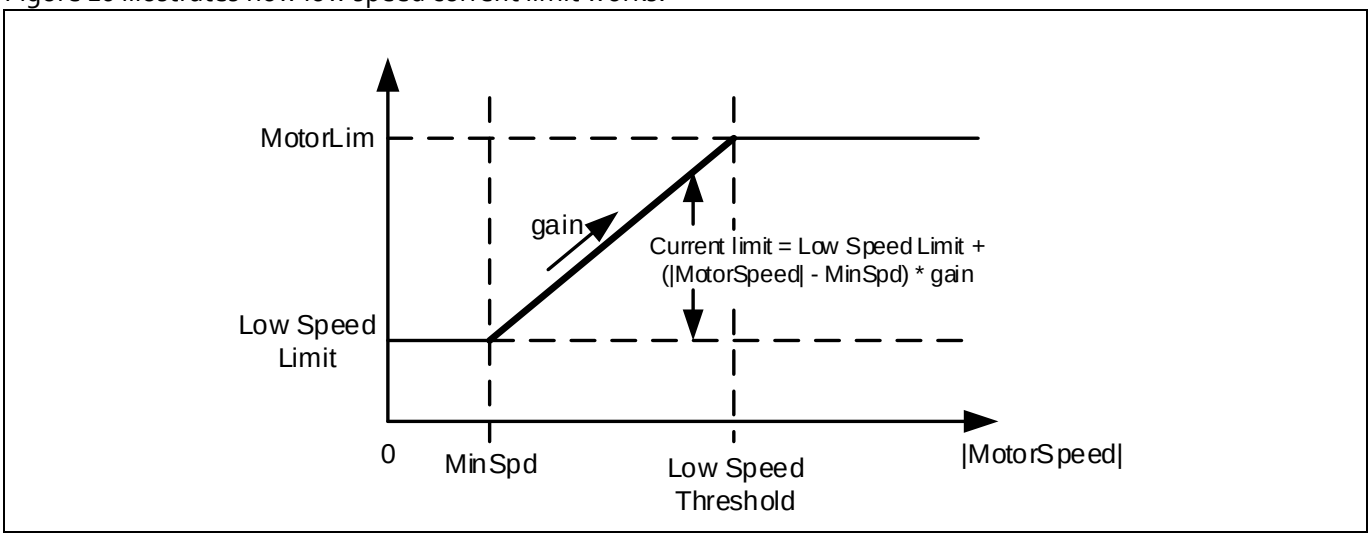

Figure 10 Low speed current limit (Motoring limit)

2.1.6 Protection

2.1.6.1 Flux PLL out-of-control protection

When the Flux PLL is locked to correct rotor angle, Flx_M, which represent the flux of the permanent magnet of the motor, should be a DC value normalized at 2048 counts. Instead, if the PLL is not locked to correct rotor angle, Flx_M becomes either unstable or its value is far off from 2048 counts. Flux PLL out-of-control protection is the mechanism designed to detect this fault condition.

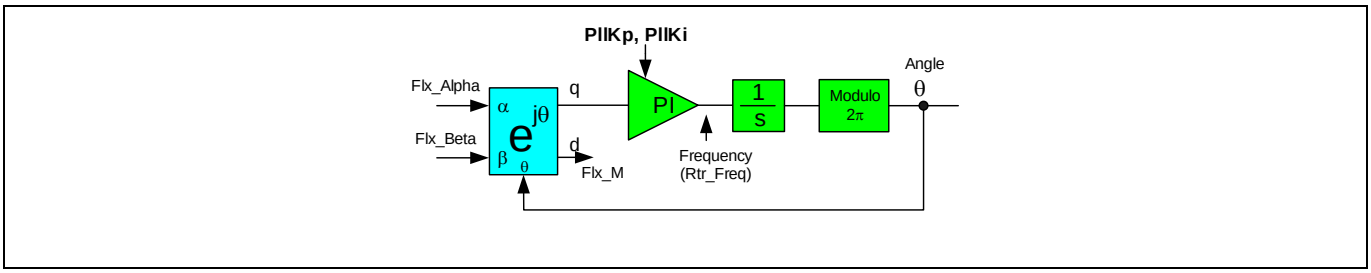

Figure 11 Simplified block diagram of a Flux PLL

This MCE keeps monitoring Flx_M, within certain time slot (configured by "PLL_OutSync_time" parameter), if its value below 512 or above 8192, and if this happens in 8 continuous time slots (each time slot time is equal to PLL_OutSync_time/8), flux PLL is considered "out-of-control". See Figure 12 for detail.

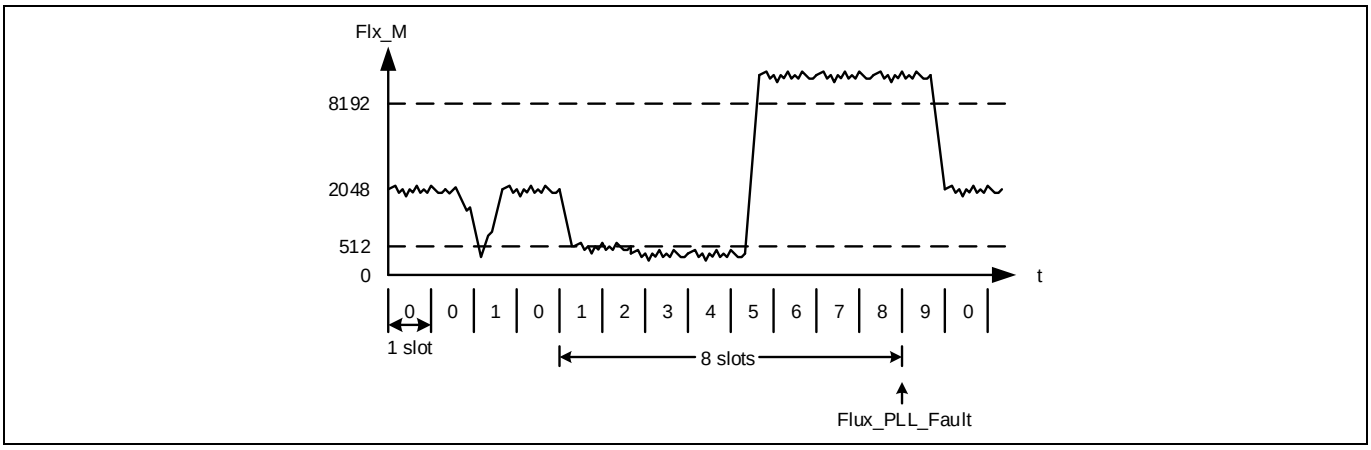

Figure 12 Flux PLL out-of-control protection

Flux PLL out-of-control protection can be enabled or disabled. This protection is also able to detect phase loss condition.

2.1.6.2 Rotor lock protection

Rotor lock fault is detected if speed PI output (TrqRef) being saturated for defined time window (configured by "RotorLocktime" parameter). When the motor speed is above 25% of maximum RPM, rotor lock check is disabled; this is to avoid erroneous fault report at higher speed.

Rotor lock detection is not 100% guaranteed to report the fault especially when the motor is running at low speed. The reason is, in rotor lock condition, the PLL might be locked at higher speed which may not cause speed PI output to be saturated.

2.1.6.3 Overcurrent Protection

Gate kill fault is set during over current condition. This over current condition is detected by two sources of inputs

1. Direct Gate kill pin: Gate kill fault is set if input is LOW
2. Internal comparators

It is possible to select either both or any one source for over current detection logic. Over current detection source can be selected by MCEWizard.

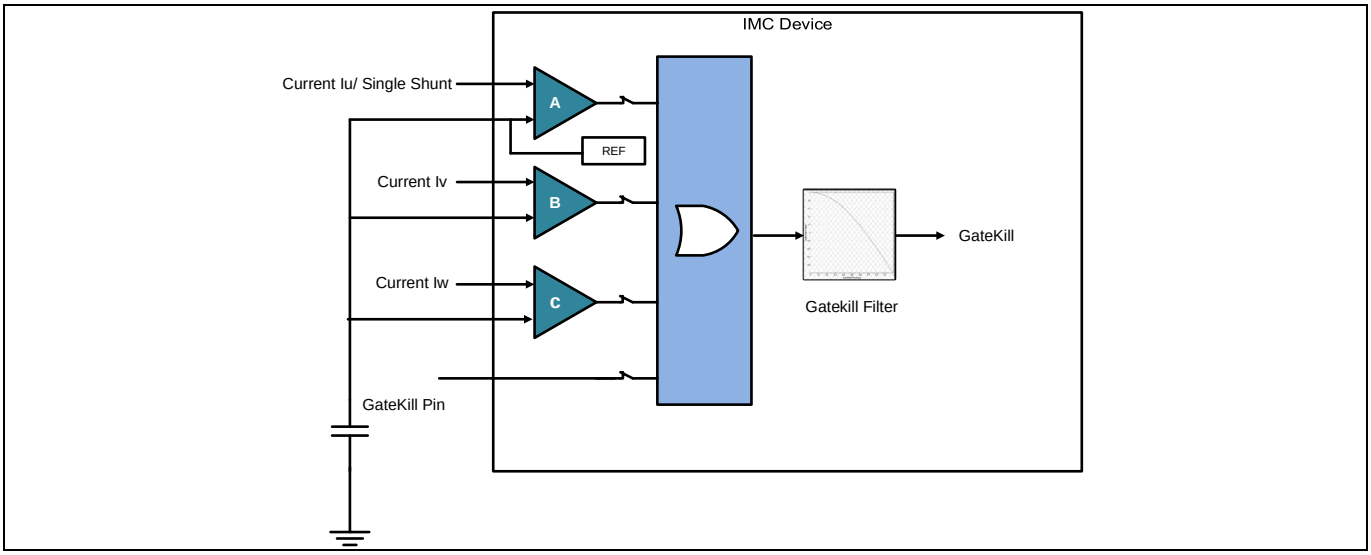

Figure 13 Overcurrent Protection Internal Comparator

Current trip level for internal comparator to be configured using MCEWizard, "CompRef" parameter holds the current trip level value. In case of leg shunt current measurement, three internal comparators (Comparator A, B and C mentioned in Figure 13) are used to detect over current condition. Only one internal comparator (Comparator A mentioned in Figure 13) is used for single shunt current measurement.

Internal configurable digital filter is available to avoid any high frequency noise. " GatekillfilterTime" parameter holds the gate kill filter value. Input signal needs to be remaining stable for gate kill filter time period to trigger the fault condition.

This fault cannot be disabled.

2.1.6.4 Over Temperature Protection

Over temperature protection is realized using external NTC thermistor. If temperature is above Tshutdown, if over temperature Shutdown is enabled, motor will stop and report fault.

2.1.6.5 Over / under voltage Protection

Over/ under voltage fault is detected when DC bus voltage above or below the voltage threshold values. If DC bus voltage is above or below the voltage threshold value and over/ under voltage protection are enabled, motor will stop and report fault.

If DC bus voltage is above critical over voltage value, motor will be stop and report fault. During this fault condition zero vectors is applied until the fault is cleared. Critical over voltage fault cannot be disabled.

2.1.6.6 Phase Loss Protection

The MCE detects a motor phase loss condition. If one of the motor phases is disconnected, or the motor windings are shorted together, the parking currents will not have the correct value. During parking state of drive startup, motor phase currents are compared against "PhaseLossLevel" levels to determine whether a phase loss (connection between inverter and motor) is presented. When the Phase Loss Fault is enabled, the controller detects this condition.

2.1.7 Catch Spin

"Catch Spin" is a feature designed for situations where the motor may already be spinning. Catch spin cannot be done if the motor back EMF voltage is higher than the DC bus voltage; this usually occurs when the motor is running above rated speed. Hence, the catch spin is generally effective up to the rated speed of the motor. The catch spin starting process is part of the state machine and executes at start-up if catch spin is enabled.

In catch spin, the controller tracks the back EMF in order to determine if the motor is turning, and if so, in which direction. Catch spin sequence begins after the bootstrap capacitor charging stage is completed. During catch spin, both IqRef and IdRef are set to 0 (Speed regulator is disabled), meanwhile flux PLL attempts to lock to the actual motor speed (MotorSpeed) and rotor angle (RotorAngle). Catch spin time, defined by TCatchSpin parameter. Once catch spin time is elapsed, calculated motor speed check with "DirectStartThr" parameter value. If motor speed is more than or equal to "DirectStartThr" parameter value, normal speed control starts, current motor speed will become the initial speed reference and also set as the speed ramp starting point. Depending on the set target speed, motor will decelerate (via regenerative braking) or accelerate to reach the desired speed. If motor speed is less than "DirectStartThr" parameter value, motor state changes to "ANGLESENSING" state.

Depending upon the direction of rotation, there are 3 types of catch spin scenarios

- Zero Speed Catch Spin
- Forward Catch Spin
- Reverse Catch Spin

2.1.7.1 Zero Speed Catch Spin

If the motor is stationary, then the catch spin sequence is termed as 'Zero Speed Catch Spin'. Figure 14(A) shows an example for 'Zero Speed Catch Spin'. In this example, at the start command, the motor is stationary. After the start command, 'Zero Speed Catch Spin' sequence begins. During the catch spin sequence, no motoring current is injected. After the catch spin time has elapsed, the motor speed at that instance (which is 0 RPM) becomes initial speed reference and starting point for speed ramp reference. The motor continues to accelerate, following the speed ramp reference to reach the set target speed.

If catch spin is disabled, normal speed control starts immediately after the start command, without waiting for PLL to be locked. As shown in Figure 14 (B), after the start command, motoring current is injected directly as there is no catch spin sequence. The motor starts accelerating, following the speed ramp reference to reach the set target speed.

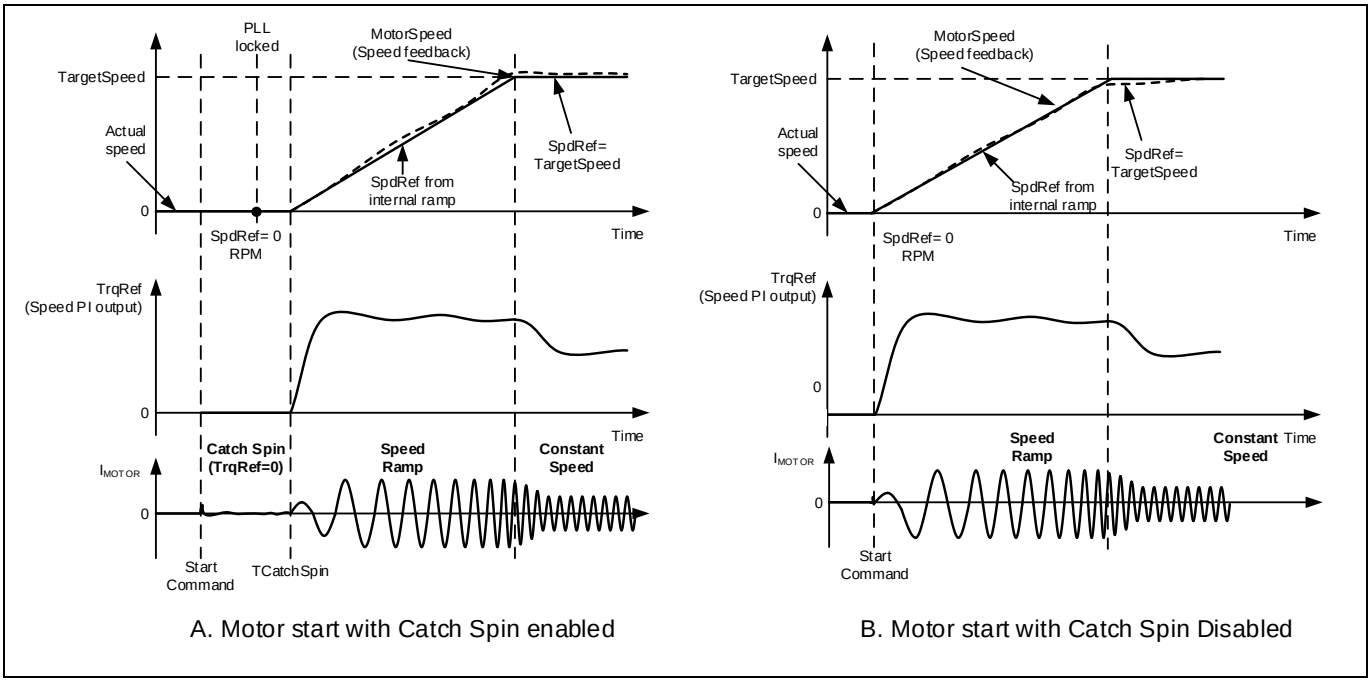

Figure 14 Zero Speed Catch Spin - Motor start with/without catch spin

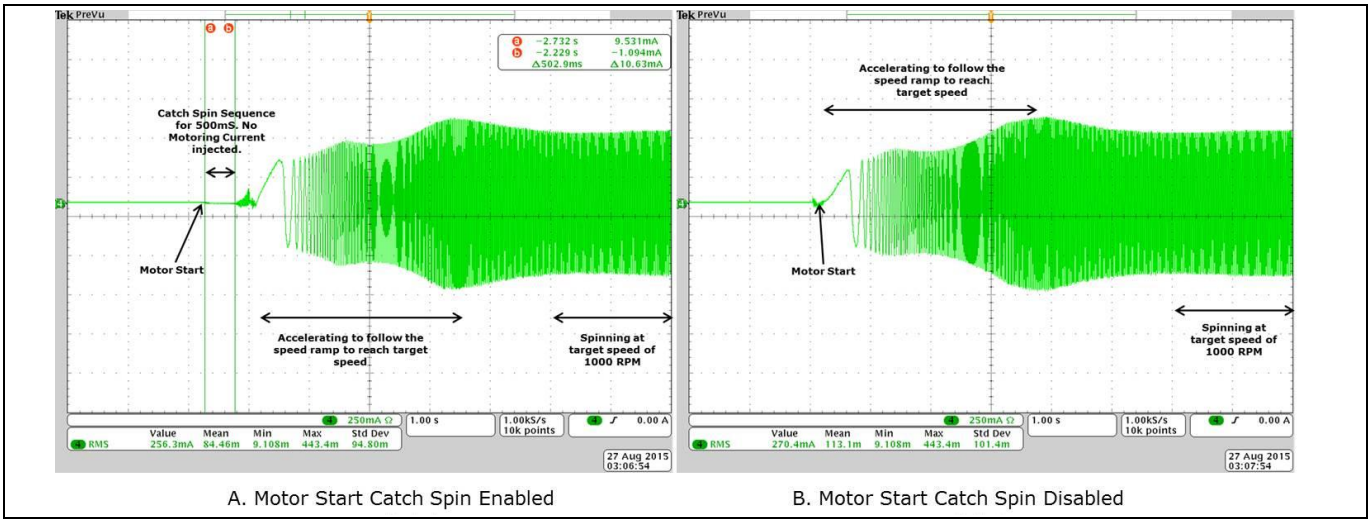

Figure 15 Motor Phase Current - Zero Speed Catch Spin - Motor start with/without catch spin

2.1.7.2 Forward Catch Spin

If the motor is spinning in the same direction as desired, then the catch spin sequence is termed as 'Forward Catch Spin'. Figure 16 (A) shows an example for 'Forward Catch Spin'. In this example, at the start command the motor is already spinning (in the desired direction). During the catch spin sequence, no motoring current is injected. After the catch spin time has elapsed, assuming the flux PLL locks to the actual motor speed, the motor speed at that instance becomes initial speed reference and starting point for speed ramp reference. The motor continues to accelerate or decelerate, following the speed ramp reference to reach the set target speed.

If catch spin is disabled, normal speed control starts immediately after the start command, without waiting for PLL to be locked. Usually the control would still be able to start a spinning motor, but motor speed may not increase/decrease seamlessly. As shown in Figure 16 (B), after the start command, the actual motor speed is higher than speed reference (SpdRef). Hence, the motor is decelerated (using regenerative braking) to force the motor to follow the speed reference (SpdRef). As the speed of the motor is higher than Regen Speed Threshold (RegSpdThr), the negative torque injected in the motor to achieve deceleration is limited by the value in

RegenLim parameter. Once the motor speed matches the speed reference, the motor starts accelerating, following the speed ramp reference to reach the set target speed.

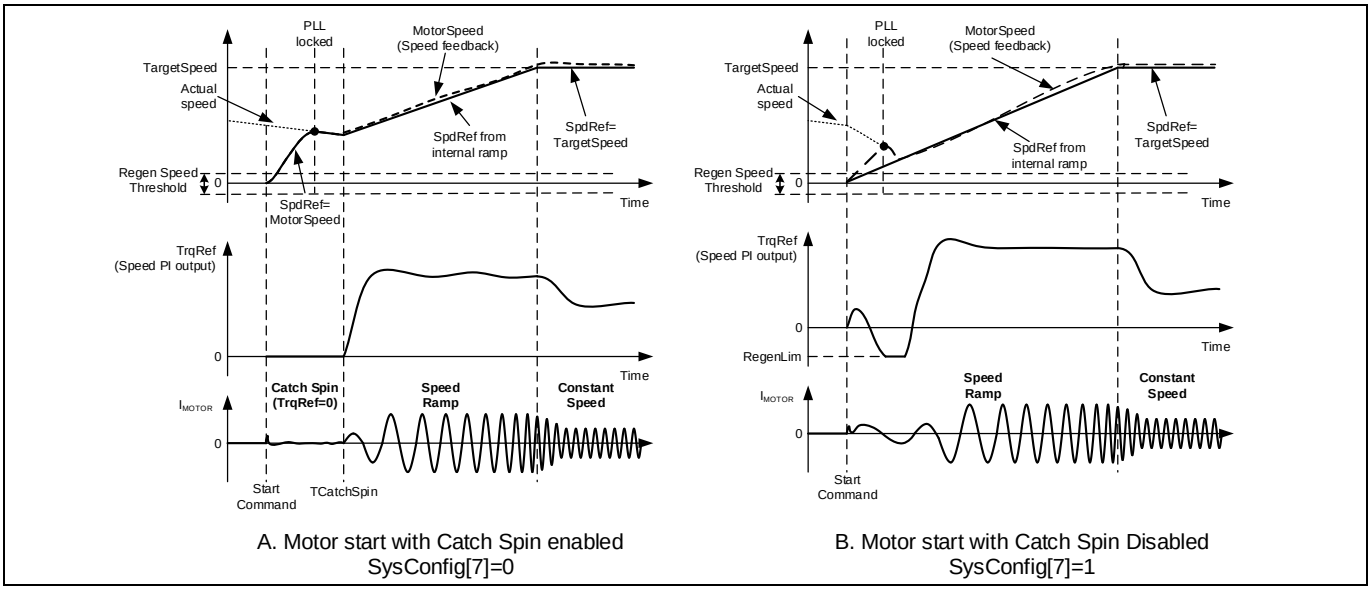

Figure 16 Forward Catch Spin - Motor start with/without catch spin

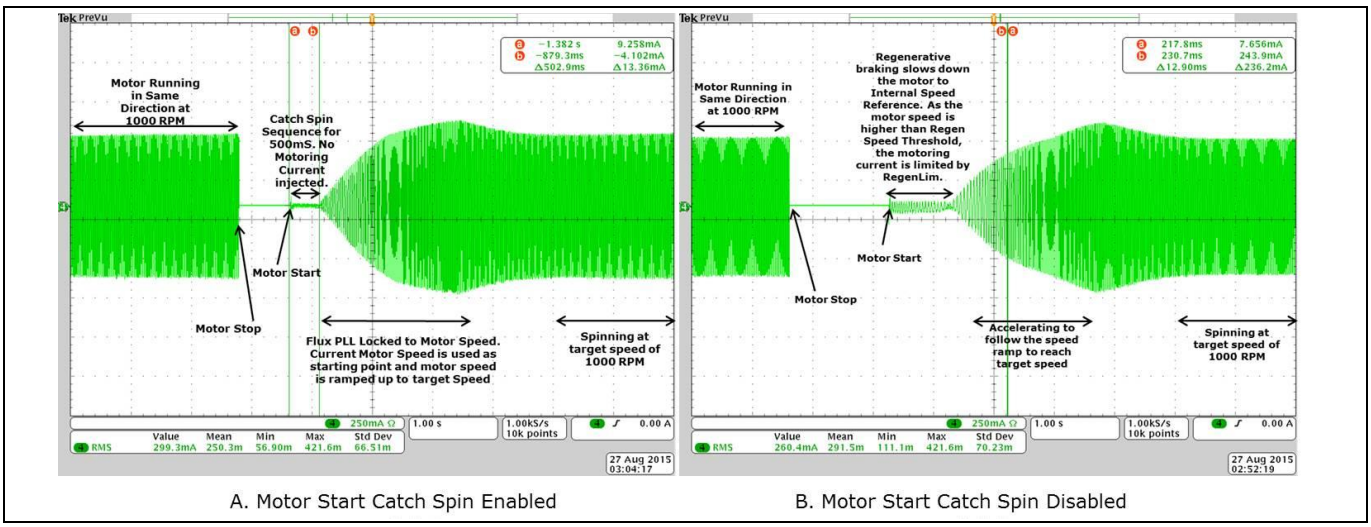

Figure 17 Motor Phase Current Waveform - Forward Catch Spin - Motor start with/without catch

2.1.7.3 Reverse Catch Spin

If the motor is spinning in the opposite direction as desired, then the catch spin sequence is termed as 'Reverse Catch Spin'. Figure 18 (A) shows an example of 'Reverse Catch Spin'. In this example, at the start command, the motor is already spinning (in the opposite direction). During the catch spin sequence, no motoring current is injected. After the TCatchSpin time has elapsed, the motor is still spinning in opposite direction at a speed higher than Regen Speed Threshold (RegenSpdThr), thus an injected torque, limited by the value defined in RegenLim parameter, forces the motor to decelerate via regenerative braking. Once the speed of the reverse spinning motor falls below Regen Speed Threshold (RegenSpdThr), the injected torque is limited by MotorLim (RegenLim<=MotorLim). The injected torque forces the motor to come to a stop and start accelerating in the desired spin direction, following the speed ramp reference to reach the set target speed.

If catch spin is disabled, normal speed control starts immediately after the start command, without waiting for PLL to be locked. Usually the control would still be able to start a spinning motor, but motor speed may not increase/decrease seamlessly. As shown in Figure 18 (B), after the start command, the motor is still spinning at a

speed higher than Regen Speed Threshold (RegenSpdThr), hence the injected torque limited by the value defined in RegenLim parameter, forces the reverse spinning motor to decelerate via regenerative braking. Once the speed of the reverse spinning motor falls below Regen Speed Threshold (RegenSpdThr), the injected torque is limited by MotorLim (RegenLim<=MotorLim). The injected torque forces the motor to come to a stop and start accelerating in the desired spin direction, following the speed ramp reference to reach the set target speed.

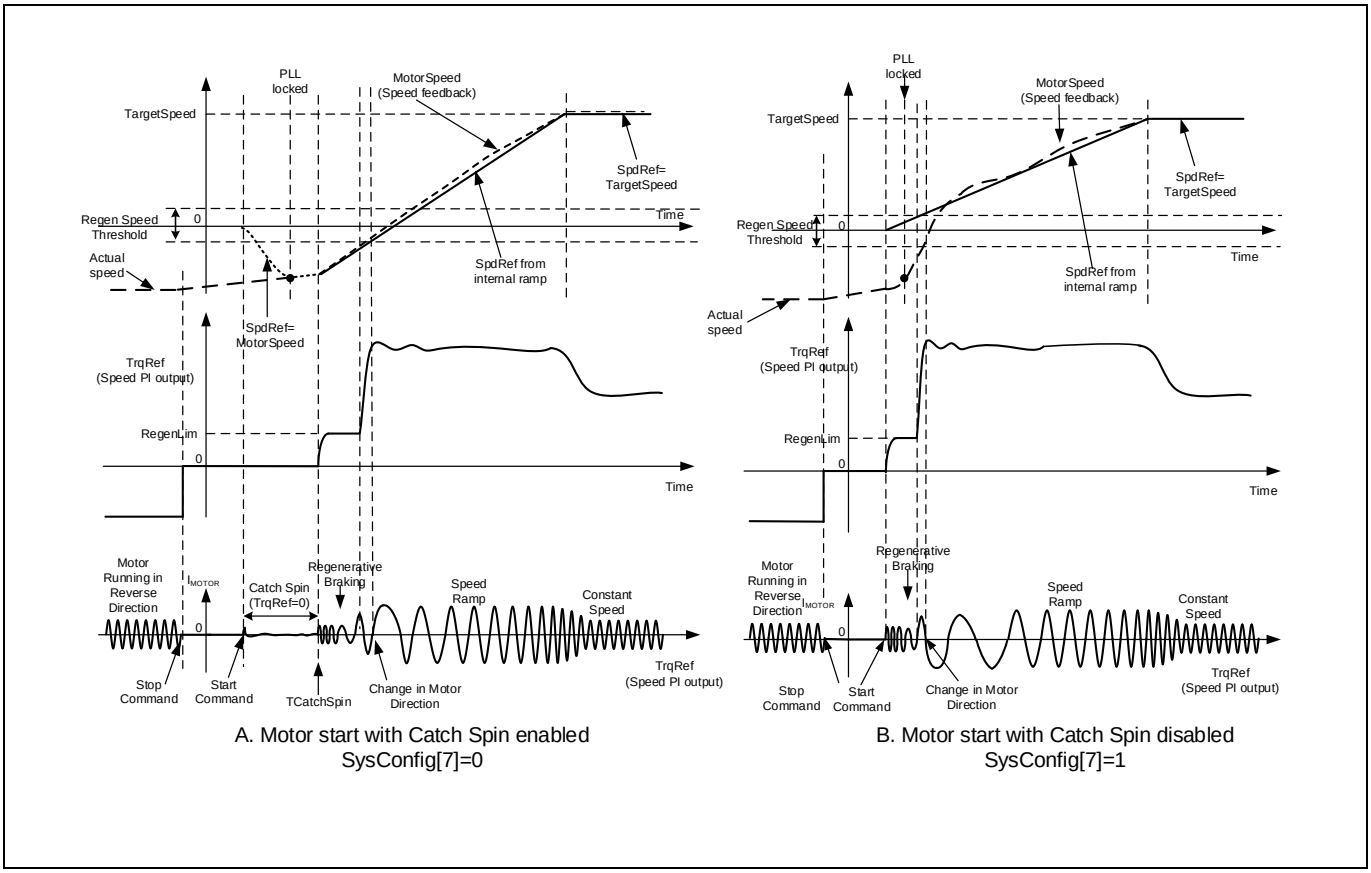

Figure 18 Reverse Catch Spin - Motor start with/without catch spin

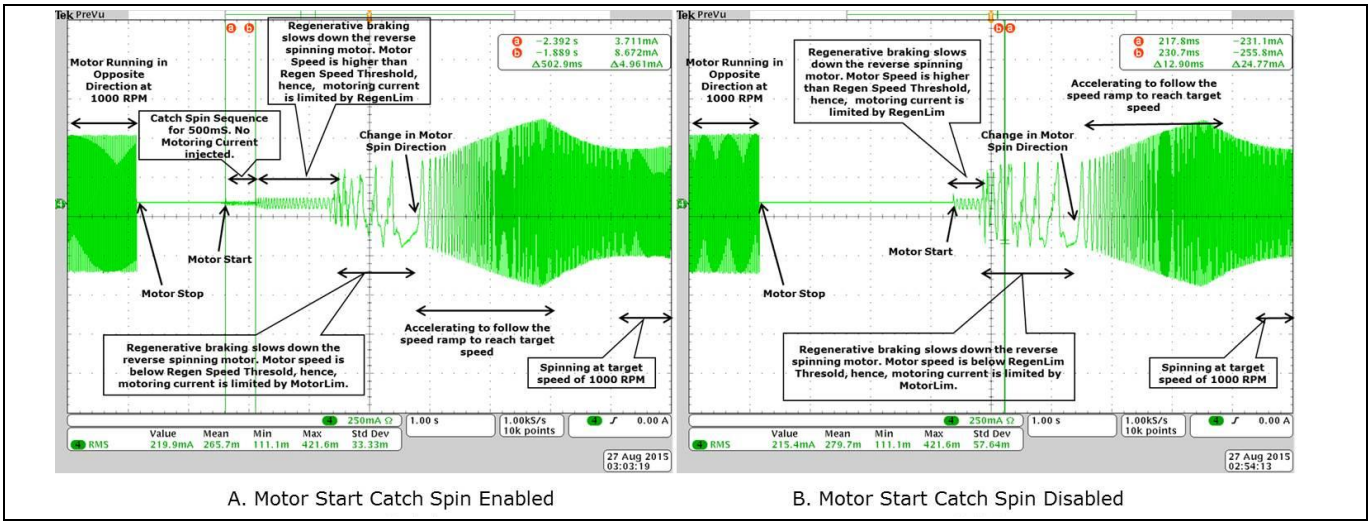

Figure 19 Motor Phase Current Waveform - Reverse Catch Spin - Motor start with/without catch spin

2.1.8 Control Input

MCE is able to control the motor from 4 types of inputs. Type of control input can be configured using MCEWizard.

- UART control
- Vsp analog input
- Frequency input
- Duty cycle input

2.1.8.1 UART control

In UART control mode, motor start, stop and speed change are controlled by UART command. Target speed can be positive or negative; motor will spin in reverse direction if Target Speed is negative. If any fault condition happens, motor will stop and stay in fault status. It is up to master controller when to clear the fault and restart the motor.

2.1.8.2 Vsp Analog Input

In Vsp Analog Input control mode, the motor operations like motor start, motor stop and speed change are controlled by applying an analog voltage signal. Direction of the motor is controlled by a separate pin. If the direction pin is LOW, target speed will be set as positive and if the direction pin is HIGH, target speed will be set as negative value; motor will spin in reverse direction if target speed is negative. MCE uses "VSP" pin as the Vsp Analog input and uses "DIR" pin as motor direction input. The relationship between Vsp voltage and motor target speed is shown in Figure 20.

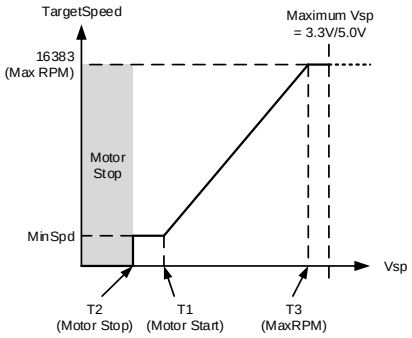

Figure 20 Vsp Analog Input

There are three input thresholds used to define the relationship between input voltage and target Speed.

- T1 (Input threshold for motor start): if the Vsp analog voltage is above this threshold, motor will start
- T2 (Input threshold for motor stop): if the Vsp analog voltage is below this threshold, motor will stop
- T3 (Input threshold for MaxRPM): if the Vsp analog voltage is higher or equal to this threshold, "TargetSpeed" variable will be 16383 which is maximum speed.

MCEWizard uses these three input thresholds to calculate the value of three parameters: "CmdStart", "CmdStop" and "CmdGain"

$$CmdStop = Integer\left\{\left(\frac{T2 * 2}{Vadcref} * 2048\right) + 0.5\right\}$$

Where T2 = Analog Vsp Motor Stop Voltage in V.

$$CmdStart = Integer\left\{\left(\frac{T1 * 2}{Vadcref} * 2048\right) + 0.5\right\}$$

Where T1 = Analog Vsp Motor Start Voltage in V.

$$CmdGain = Integer\left\{\left(\frac{Speed_{Max} - Speed_{Min}}{Speed_{Max}} * 2^{12}\right) * \left(\frac{2^{14}}{\left(\left(4096 * 32 * \frac{T3}{Vadcref}\right) - (CmdStart * 32)\right)}\right) + 0.5\right\}$$

Where T3 = Analog Vsp Motor Max RPM Voltage in V

$Speed_{Max}$ = Maximum motor speed in RPM

$Speed_{Min}$ = Minimum motor speed in RPM

Table 4 Specification for Analog Input Voltage

Recommended input range	Vsp Analog input (0.1V to V_{adcref})
T1	<50% of V_{adcref}
T2*	<50% of V_{adcref}
T3**	< V_{adcref}

Note: * *T2 must be < T1 and **T3 must be>T2*

Refer IMC data sheet for input range for specific devices and pin details. This feature is not available in UART control mode.

2.1.8.3 Frequency input

In Frequency Input control mode, the motor operations like motor start, motor stop and speed change are controlled by applying a square wave frequency signal on digital IO pin. Direction of the motor is controlled by a separate pin. If the direction pin is LOW, target speed will be set as positive and if the direction pin is HIGH, target speed will be set as negative value; motor will spin in reverse direction if target speed is negative. MCE uses "DUTYFREQ" pin as the frequency input and uses "DIR" pin as motor direction input. The relationship between Frequency and motor target speed is shown in Figure 21

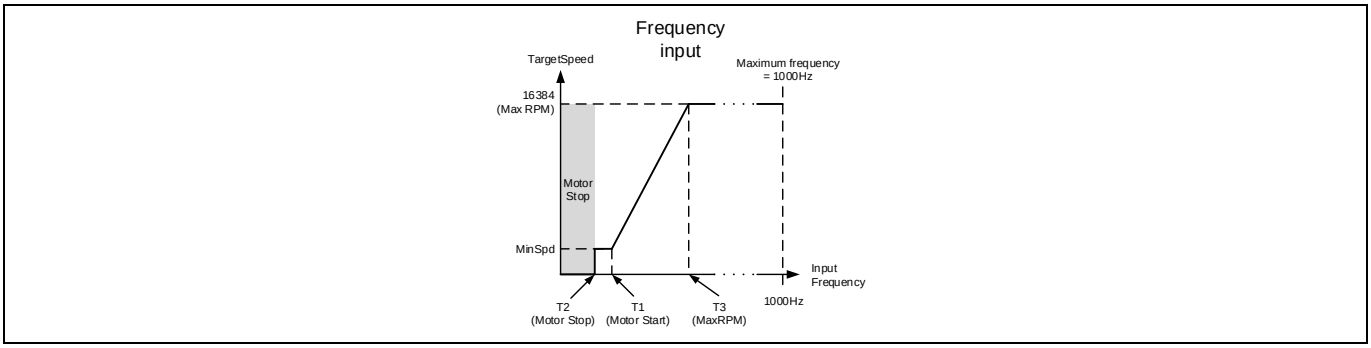

Figure 21 Frequency Input

There are three input thresholds used to define the relationship between frequency input and target Speed.

- T1 (Input threshold for motor start): if the frequency input is above this threshold, motor will start
- T2 (Input threshold for motor stop): if the frequency input is below this threshold, motor will stop
- T3 (Input threshold for MaxRPM): if the frequency input is higher or equal to this threshold, target Speed will be 16383 which is maximum speed.

MCEWizard uses these three input thresholds to calculate the value of three parameters: "CmdStart", "CmdStop" and "CmdGain"

$$CmdStop = Integer\{T2 * 10 + 0.5\}$$

Where T2 = Motor Stop Speed Frequency in Hz.

$$CmdStart = Integer\{T1 * 10 + 0.5\}$$

Where T1 = Motor Start Speed Frequency in Hz.

$$CmdGain = Integer\left\{\left(2^{12} * \frac{\left(16384 - \left(\frac{Speed_{Min}}{Speed_{Max}} * 16384\right)\right)}{(T3 - T1) * 32 * 10}\right) + 0.5\right\}$$

Where T1 = Motor Start Speed Frequency in Hz,

T3 = Motor Max Speed Frequency in Hz,

$Speed_{Max}$ = Maximum motor speed in RPM,

$Speed_{Min}$ = Minimum motor speed in RPM.

Table 5 Specification of Frequency Input

Recommended input range	Frequency input (5Hz – 1000Hz ,10% – 90% duty cycle)
T1	≤ 255Hz
T2*	≤ 255Hz
T3**	≤ 1000Hz

Note: * *T2 must be < T1 and **T3 must be>T2*

Refer IMC data sheet for input range for specific devices and pin details. This feature is not available in UART control mode.

2.1.8.4 Duty Cycle Input Control

In Duty Cycle Input control mode, the motor operations like motor start, motor stop and speed change are controlled by varying the duty cycle of a rectangular wave signal on digital IO pin. Direction of the motor is controlled by a separate pin. If the direction pin is LOW, target speed will be set as positive and if the direction pin is HIGH, target speed will be set as negative value; motor will spin in reverse direction if target speed is negative. MCE uses "DUTYFREQ" pin as the duty input and uses "DIR" pin as motor direction input. The relationship between duty cycle and motor target speed is shown in Figure 22

In duty cycle control mode, the pre-scaler of capture timer has much wider range than frequency control mode. This allows higher input frequency in duty cycle control mode; the recommended input frequency range is 5Hz to 20 kHz. Please note that any external R/C low pass filter on the input pin may affect the duty cycle measurement especially when the input frequency is above 1kHz.

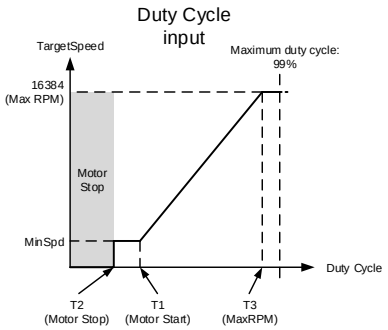

Figure 22 Duty Cycle Input

There are three input thresholds used to define the relationship between duty cycle input and target Speed.

- T1 (Input threshold for motor start): if the duty cycle input is above this threshold, motor will start
- T2 (Input threshold for motor stop): if the duty cycle input is below this threshold, motor will stop
- T3 (Input threshold for MaxRPM): if the input reaches or above this threshold, "TargetSpeed" variable will be 16383 which is maximum speed.

MCEWizard uses these three input thresholds to calculate the value of three parameters: "CmdStart", "CmdStop" and "CmdGain"

$$CmdStop = Integer\left\{\left(\frac{T2}{50}\right) * 512 + 0.5\right\}$$

Where T2 = Motor Stop Speed Duty Cycle in %.

$$CmdStart = Integer\left\{\left(\frac{T1}{50}\right) * 512 + 0.5\right\}$$

Where T1 = Motor Start Speed Duty Cycle in %.

$$CmdGain = Integer\left\{\left(\frac{Speed_{Max} - Speed_{Min}}{Speed_{Max}} * 2^{12}\right) * \left(\frac{2^{14}}{\left(\left(16384 * \frac{T3}{100}\right) - (CmdStart * 32)\right) * 2}\right) + 0.5\right\}$$

Where T1 = Motor Start Speed Duty Cycle in %,

T3 = Motor Max Speed Duty Cycle in %,

SpeedMax = Maximum motor speed in RPM,

SpeedMin = Minimum motor speed in RPM.

MCEWizard uses these three input thresholds to calculate the value of three parameters: "CmdStart", "CmdStop" and "CmdGain"

Table 6 Specification of Duty Cycle Input

Recommended input range	Duty cycle input (5Hz – 20kHz, 1% – 99% duty cycle)
T1	<50%
T2*	<50%
T3**	≤ 99%

Note: * *T2 must be < T1 and **T3 must be>T2*

Refer IMC data sheet for input range for specific devices and pin details. This feature is not available in UART control mode.

2.1.8.5 Automatic Restart

In Vsp, frequency or duty cycle control input mode, if there is fault condition, motor will stop and start a 10seconds counter. After 10 seconds, the control will try to clear the fault for 10 times. If the fault condition still exists, control will stay in fault condition, once the fault condition is removed, motor will start again.

This feature is not available in UART control mode.

2.1.8.6 Forced control input change

If required by some debug purpose, it is possible to change the control inputs by sending UART command from master controller (or PC), and then a new mode will be effective immediately. If the control input is switched to UART control from the other three inputs, motor status (run/stop and "TargetSpeed" variable) will be unchanged until it receives a new motor control command.

2.2 Power Factor Correction

Power Factor Correction (PFC) is a technique used to match the input current waveform to the input voltage, as required by government regulation in certain situations. The power factor, which varies from 0 to 1, is the ratio between the real power and apparent power in a load. A high power factor can reduce transmission losses and improve voltage regulation. Regulations will specify the condition at which to demonstrate the efficiency of the PFC.

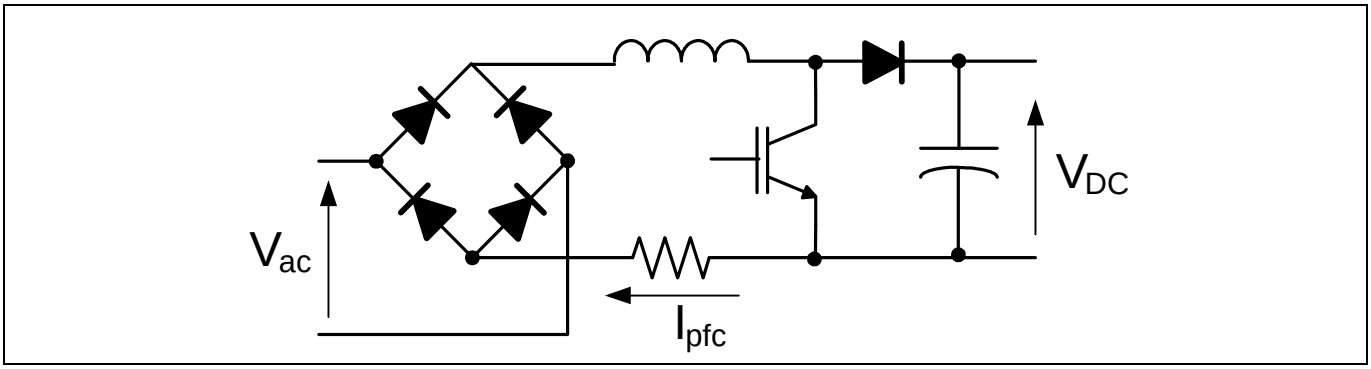

Figure 23 Basic Boost PFC Circuit

Above figure shows the simplified circuit of the boost PFC topology.

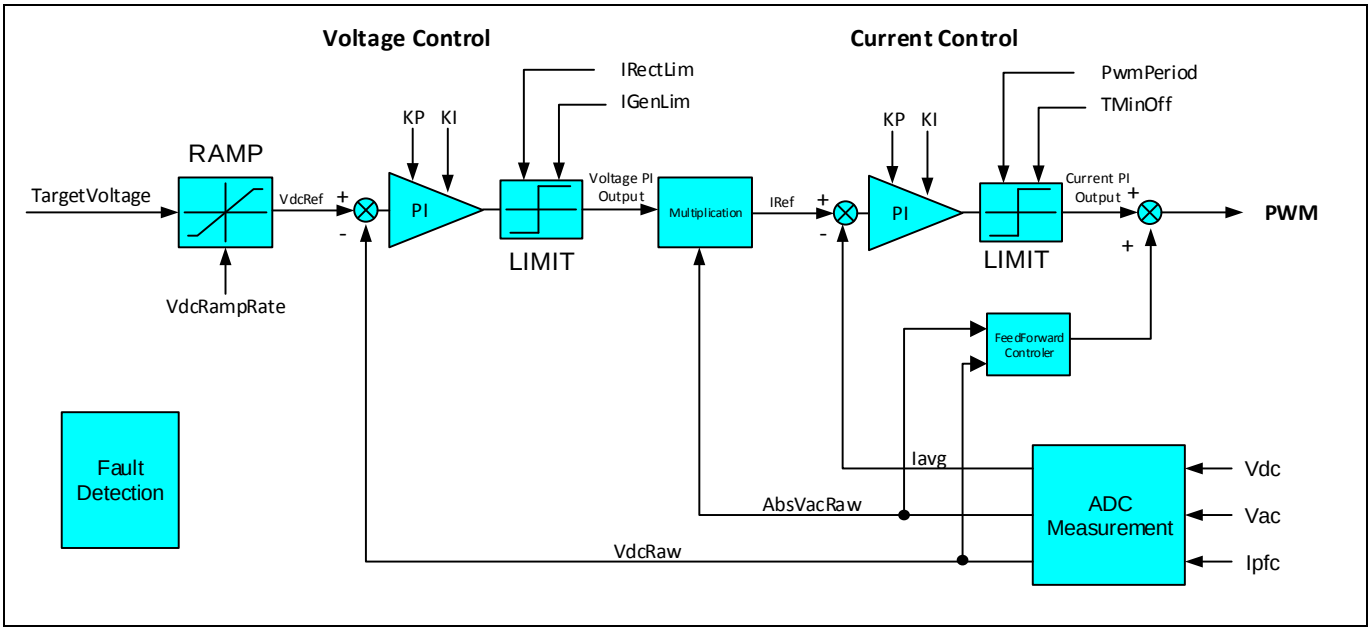

Figure 24 Top level diagram of Power Factor Correction

MCE PFC is multiplier based control, which means there are two control loops in PFC, an inner current loop and an outer voltage loop, along with a feedforward component. The output of the voltage controller is multiplied by the rectified ac voltage to produce a current reference. The output of the current controller is added to the feedforward output to generate the modulation command. This PFC control scheme requires sensing of the inductor current, AC line voltage and DC bus voltage.

MCE supports two types of PFC topologies.

1. Boost Mode PFC
2. Totem-Pole PFC

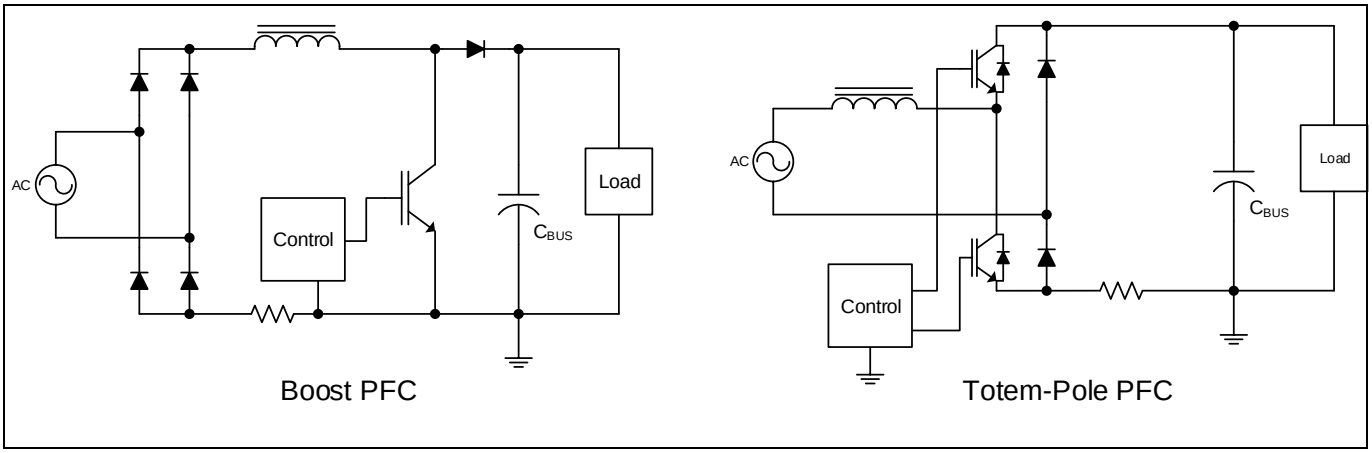

Figure 25 PFC topologies

Boost PFC is most common PFC topology because it's easy to control. Boost topology is not very efficient due to high losses on bridge diodes. There are some bridgeless designs which are targeting to reduce the bridge diode losses, but most of the bridgeless PFC solutions suffer from EMI issue which makes it impossible to be used in appliance application such as inverter air-conditioner. Totem pole PFC is a type of bridgeless PFC but it doesn't have EMI issue. With development of fast IGBT and commercial availability of high bandgap switches such as SiC and GaN, totem pole PFC attracts more attention as a candidate to replace traditional boost PFC.

It is challenging to design a totem pole PFC control circuit without using expensive sensors for AC voltage and inductor current sensing. The nature of totem pole PFC topology decides it needs more complicated control circuit compare to boost PFC. The main target of MCE totem-pole design is to minimize complexity regarding hardware of control circuit. It uses differential sensing for AC voltage and uses single shunt resistor on DC link for inductor current sensing. There is no additional hardware to detect AC voltage polarity. Digital control also makes it possible to re-construct the inductor current information from single shunt on DC link.

Table 7 List of PFC Protection

Type of Protection	Description
Gatekill	This fault is set when there is over current and shutdown PWM. Cannot be masked.
DC Over Voltage	This fault is set when the DC Bus voltage is above a threshold.
DC Under Voltage	This fault is set when the DC Bus voltage is under a threshold.
AC over voltage	This fault is set when the AC input voltage to PFC is above a threshold.
AC under voltage	This fault is set when the AC input voltage to PFC is below a threshold.
Frequency fault	This fault is set when AC input frequency value to PFC is different from set value
Parameter Load	This fault occurs when wrong values in parameter block in the flash.

Note: PFC will be stopped during any fault in the motor control.

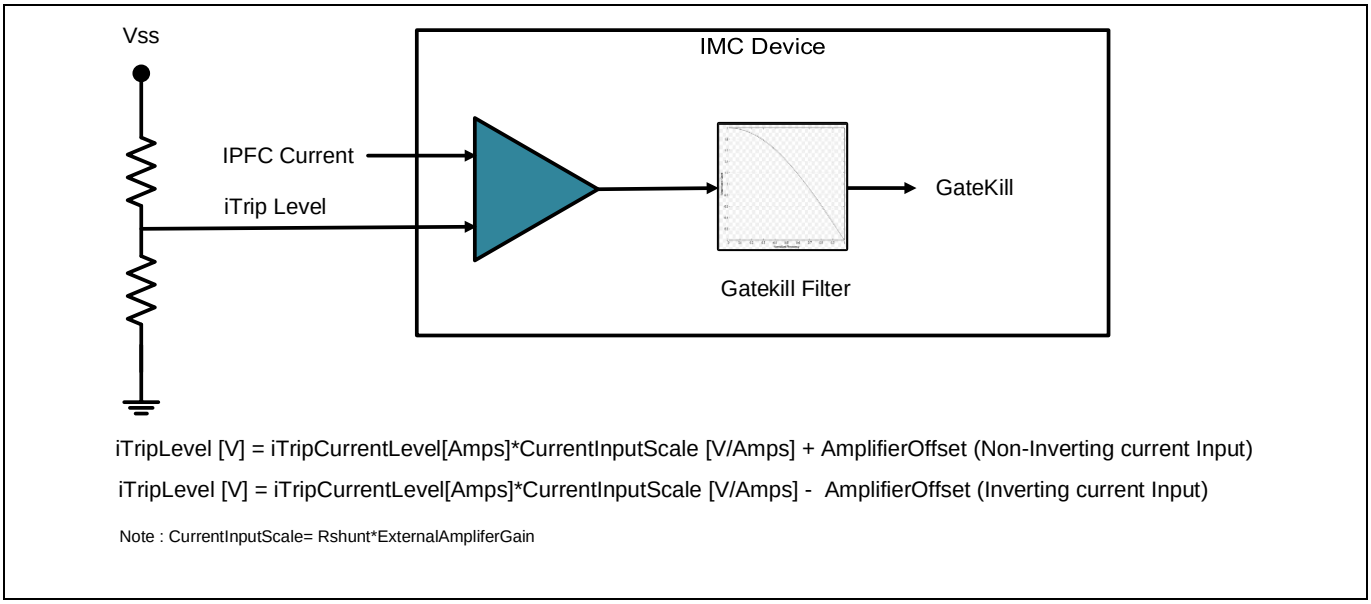

Figure 26 PFC Gatekill setup

2.2.1 State Handling

Motion Control Engine (MCE) includes a built-in state machine which takes care of all state-handling for starting, stopping and performing start-up. A state machine function is executed every 1mS. Totally there are 5 states. Current state of sequencer is stored in "PFC_SequencerState" variable.

Table 8 State Description and Transition

State No	Sequence State	State Functionality	Transition Event	Next Sequence State
0	IDLE	After the controller power up, control enters into this state. If there is no valid parameter block, control stay in this state.	Parameters are loaded successfully.	STOP
1	STOP	Wait for start command. Current and voltage measurement for protection	Current Amplifier offset calculation is not done.	OFFSETCAL
			Start Command.	RUN
2	OFFSETCAL	Offset calculation for PFC current sensing input. This state takes 256 PWM cycles.	Current offset calculation completed.	STOP
4	RUN	Normal PFC run mode	Stop Command	STOP
5	FAULT	If any fault detected, PFC will be stopped (if it was previously running) and enter FAULT state from any other state.	Fault clear command by writing 1 to "PFC_FaultClear" variable	STOP

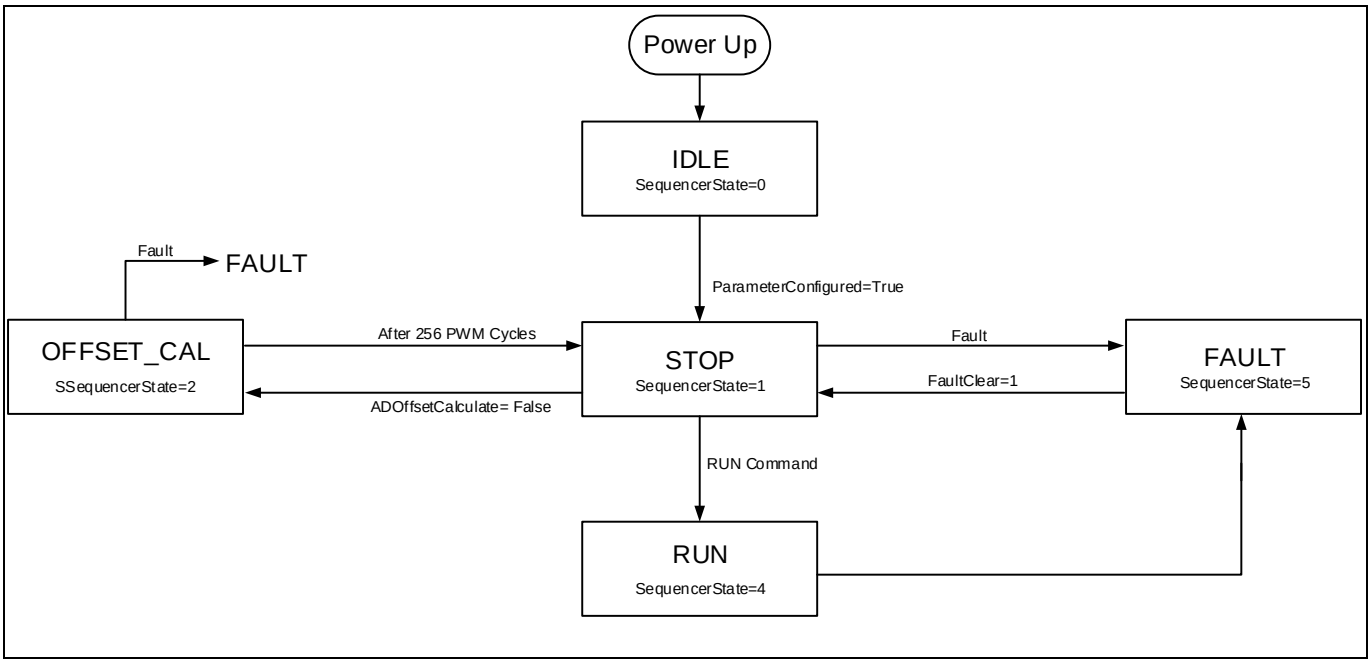

Figure 27 State handling flow chart

2.3 User Mode UART

The user mode UART communication is designed to provide a simple, reliable and scalable communication protocol for motor control application. The protocol is simple so that it can be easily implemented even in low-end microcontrollers which work as master to control the motor. It supports networking (up to 15 nodes on same network) which is required in some industrial fan/pump applications. Each UART commands are processed every 1mS.

2.3.1 Data Frame

The format of the data frame is shown in Figure 28.

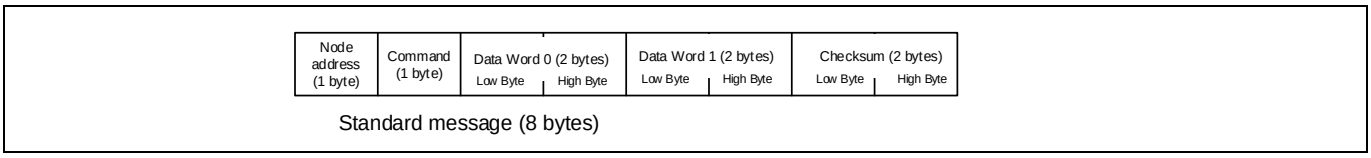

Figure 28 UART Data Frame

2.3.2 Node Address

Node address is the first byte in a data frame. It is designed to allow one master controlling multiple slaves in the same network. Each slave node has its unique node ID. The slave only acknowledges and responds to the message with same ID. There are two broadcast addresses (0x00 and 0xFF) defined for different usage. If a message is received with address=0x00, all the slaves execute the command but will not send a reply to the master. This is useful in a multiple slave network and the master needs to control all the slaves at the same time, for example, turn on all the motor by sending only one message. If received a frame with address=0xFF, the slave will execute the command and also send a reply to the master. This is useful in 1-to-1 configuration when the master doesn't know or doesn't need to know the slave node address.

Table 9 Node Address Definition

Node Address	Command
0x00	All nodes receive and execute command, no response.
0x01 to 0x0F	Only the node that has same address executes the command and replies the master.
0x10 to 0xFE	Reserved
0xFF	All nodes receive and execute the command and reply the master. Only used in 1-to-1 configuration. It will cause conflict if multiple nodes connected to the same network

2.3.3 Link Break Protection

Link break protection is to stop the motor if there is no UART communication for certain period of time. In some application, the main controller maintains communication with the motor controller. In case of a loss of communication or line break, it is desired to stop the motor for protection. This protection feature is enabled or disable and Link break timeout is configured in MCEWizard.

2.3.4 Command

UART command is the second byte in a data frame. Bit [6:0] specifies the command code. Bit [7] is the indication bit indicates the direction of the data frame. All data frames sent by master must have bit 7 cleared (=0), all reply data frames sent by slave must have bit 7 set (=1).

Table 10 UART Command Definition

Command (Bit[6:0])	Description
0	Read Status
1	Request to clear fault flag
2	Select Control input mode
3	Set motor control target speed
4	Not used, slave will not reply to master
5	Read Register
6	Write Register
7 - 31	Not used, slave will not reply to master
32	Load or save parameter set
33-127	Not used, slave will not reply to master

2.3.5 Checksum

Checksum is 16-bits and calculated as mentioned below:

[Command: Node address] + Data Word 0 + Data Word 1 + Checksum = 0x0000

Example Checksum calculation:

Input: Node address =1, command =2, Data Word 0 = 0x1122 and Data Word 1 = 0x3344

Checksum = -1*(0x0201+0x1122+0x3344) = 0xB999

2.3.6 UART message

2.3.6.1 Read Status: Command = 0x00

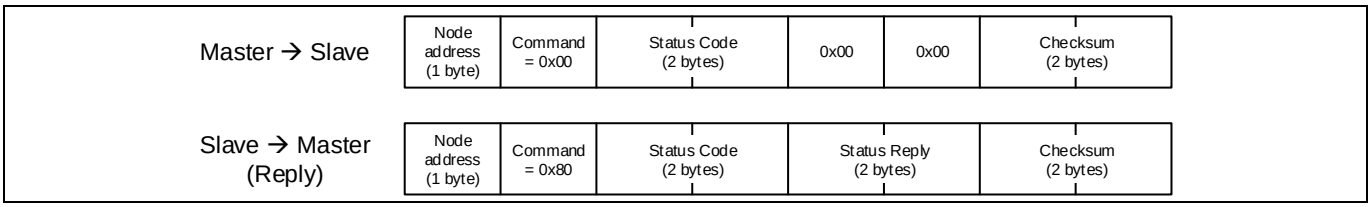

Figure 29 Read Status command

Table 11 Status code and status reply

Status code	status reply
0x0000	Fault Flags
0x0001	Motor Speed
0x0002	Motor State
0x0003	Node ID
0x0004 – 0xFFFF	0x0000

2.3.6.2 Clear Fault: Command =0x01

Master → Slave	Node address (1 byte)	Command = 0x01	0x00	0x00	0x00	0x00	Checksum (2 bytes)
Slave → Master (Reply)	Node address (1 byte)	Command = 0x81	0x00	0x00	0x00	0x00	Checksum (2 bytes)

Figure 30 Clear fault command

2.3.6.3 Change Control Input Mode: Command =0x02

Master → Slave	Node address (1 byte)	Command = 0x02	0x00	0x00	0x00	00: UART 01: Analog 02: Freq 03: Duty	Checksum (2 bytes)
Slave → Master (Reply)	Node address (1 byte)	Command = 0x82	0x00	0x00	0x00	00: UART 01: Analog 02: Freq 03: Duty	Checksum (2 bytes)

Figure 31 Control input mode command

2.3.6.4 Motor Control: Command =0x03

Master → Slave	Node address (1 byte)	Command = 0x03	0x00	0x00	TargetSpeed (2 bytes)	Checksum (2 bytes)
Slave → Master (Reply)	Node address (1 byte)	Command = 0x83	SequencerState (2 bytes)		MotorSpeed (2 bytes)	Checksum (2 bytes)

Figure 32 Motor control Command

Note: Target Speed=0: motor stop, TargetSpeed≠0: motor start

2.3.6.5 Register Read: Command = 0x05

Master → Slave	Node address (1 byte)	Command = 0x05	APP ID (1 bytes)	Register ID (1 bytes)	0x00	0x00	Checksum (2 bytes)
Slave → Master (Reply)	Node address (1 byte)	Command = 0x85	APP ID (1 bytes)	Register ID (1 bytes)	Register Value (2 bytes)		Checksum (2 bytes)

Figure 33 Register Read Command

2.3.6.6 Register Write: Command = 0x06

Master → Slave	Node address (1 byte)	Command = 0x06	APP ID (1 bytes)	Register ID (1 bytes)	Register Value (2 bytes)	Checksum (2 bytes)
Slave → Master (Reply)	Node address (1 byte)	Command = 0x86	APP ID (1 bytes)	Register ID (1 bytes)	Register Value (2 bytes)	Checksum (2 bytes)

Figure 34 Register Write Command

2.3.6.7 Load and Save Parameter: Command = 0x20

Load parameter command loads all parameters of one page into the dedicated RAM locations.

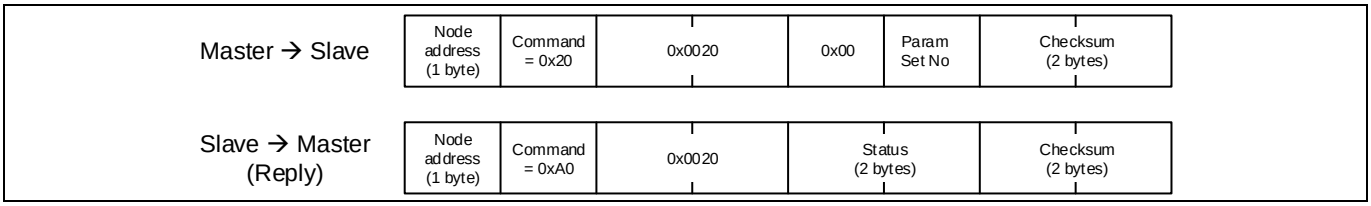

Figure 35 Load parameter Command

Save parameter command saves all parameters into one flash page.

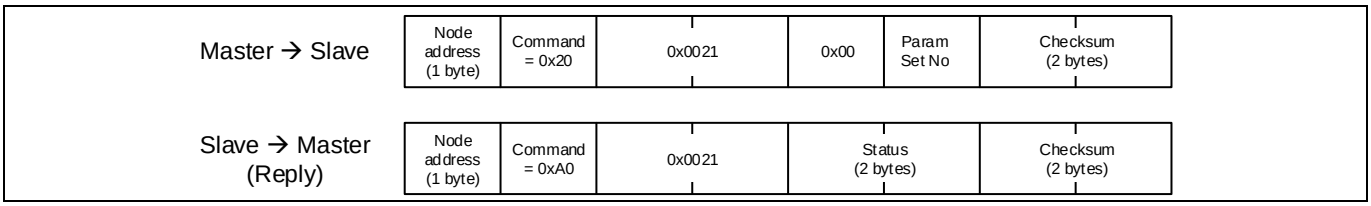

Figure 36 Save Parameter Command

2.3.7 Connecting multiple nodes to same network

It is possible to connect multiple MCE to same UART network, see Figure 37 detail.
For the TXD pin of each MCE node, it needs to connect a Schottky diode before connect to the same wire, and on the master controller side, a 4.7kOhm pull up resister is required.

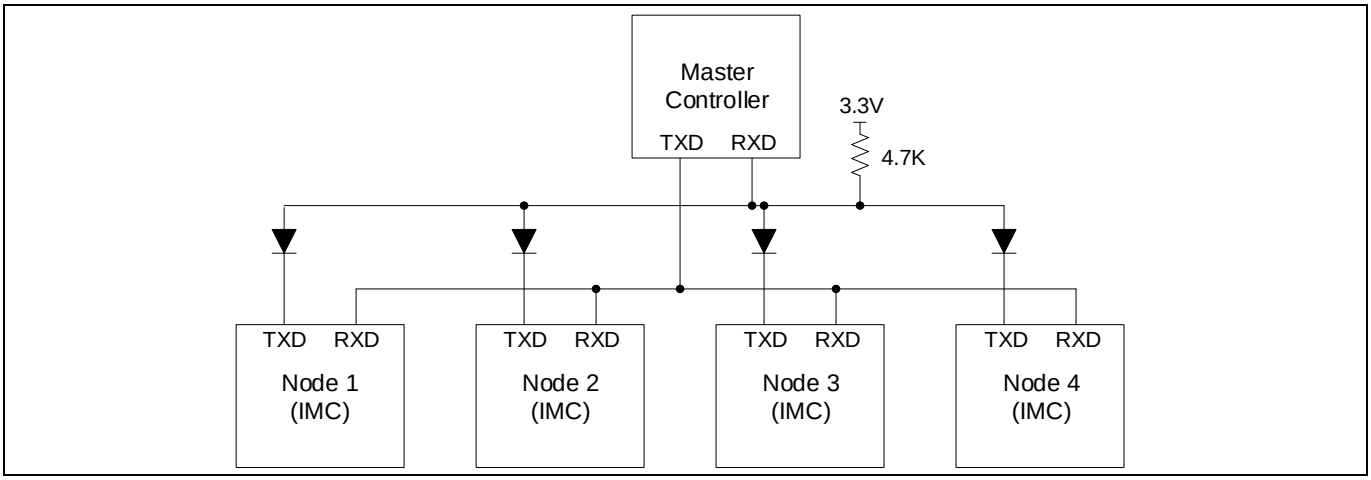

Figure 37 UART network connection

2.4 Multiple Parameter Programming

2.4.1 Parameter Page Layout

In iMOTION™ product, 4k bytes of flash memory are used to store control parameter data. There are totally 16 parameter blocks, each parameter block is 256 bytes in size. Multiple parameter blocks maximum of 15 can be programmed in order to support different motor types or hardware and one block is reserved to store system parameter.

Parameter block (Parameter set) can be selected in MCEWizard. MCEWizard output (*.txt) that contains the parameter values, can be programmed into the parameter block using MCEDesigner. MCEWizard output file contains the parameter set number, MCEDesigner load s the parameter values into appropriate parameter block. Each parameter block can be updated multiple times. During development, Initial parameter set can be generated from MCEWizard based on configuration. Tune the motor that value will be stored in RAM and when motor tuning is done export the tuned parameter using MCEDesigner or program the parameter block.

In case of Motor and PFC application, motor control parameter will be stored into selected parameter block and PFC parameter will be saved into immediate next parameter block.

2.4.2 Parameter Block Selection

MCE supports to select the parameter block in 4 different methods.

- Direct Select : : ParPageConf[3:0] =0
- UART Control : ParPageConf[3:0] =1
- Analog Input: ParPageConf[3:0] =2
- GPIO Pins : : ParPageConf[3:4] =3

Parameter block selection input configuration is available in MCEWizard and MCEWizard updated "ParPageConf" parameter.

Note: All the 4 methods to select parameter block may not be available in all iMOTION™ devices, due to pin availability. Refer specific device datasheet for available methods to select parameter block.

2.4.2.1 Direct Select

Parameters block selection is based on "ParPageConf [7:4]" parameter bit field value. "ParPageConf [7:4]" parameter bit field value can be updated from MCEWizard.

2.4.2.2 UART Control

Specific UART messages are defined to load the parameter block from flash to RAM and save the parameter set from RAM to flash. Refer section 2.3.6.7 for message format.

2.4.2.3 Analog Input

Parameter block is selected based on the analog input value. MCE uses "PARAM" pin as the Analog input for parameter set selection. Mapping between parameter page selections based on Analog input mentioned below

$$ParameterBlock = Integer\left\{\left(\frac{AnalogInput}{Vadcref} * 15\right)\right\}$$

Example if AnalogInput = 1.2V and V_{adcref} =3.3V, then ParameterBlock = 5

Note: Maximum value of parameter block is 14.

2.4.2.4 GPIO Pins

Parameter block is selected based on the four GPIO pins. GPIO pins used for parameter set selection are named as "PAR0", "PAR1", "PAR2" and "PAR3". Mapping between parameter page selections based on GPIO pins are listed in the Table 12.

Table 12 Parameter page Selection for GPIO

GPIO Input				Parameter Block
PAR3	PAR2	PAR1	PAR0	
0	0	0	0	0
0	0	0	1	1
0	0	1	0	2
0	0	1	1	3
0	1	0	0	4
0	1	0	1	5
0	1	1	0	6
0	1	1	1	7
1	0	0	0	8
1	0	0	1	9
1	0	1	0	10
1	0	1	1	11
1	1	0	0	12
1	1	0	1	13
1	1	1	0	14
1	1	1	1	14

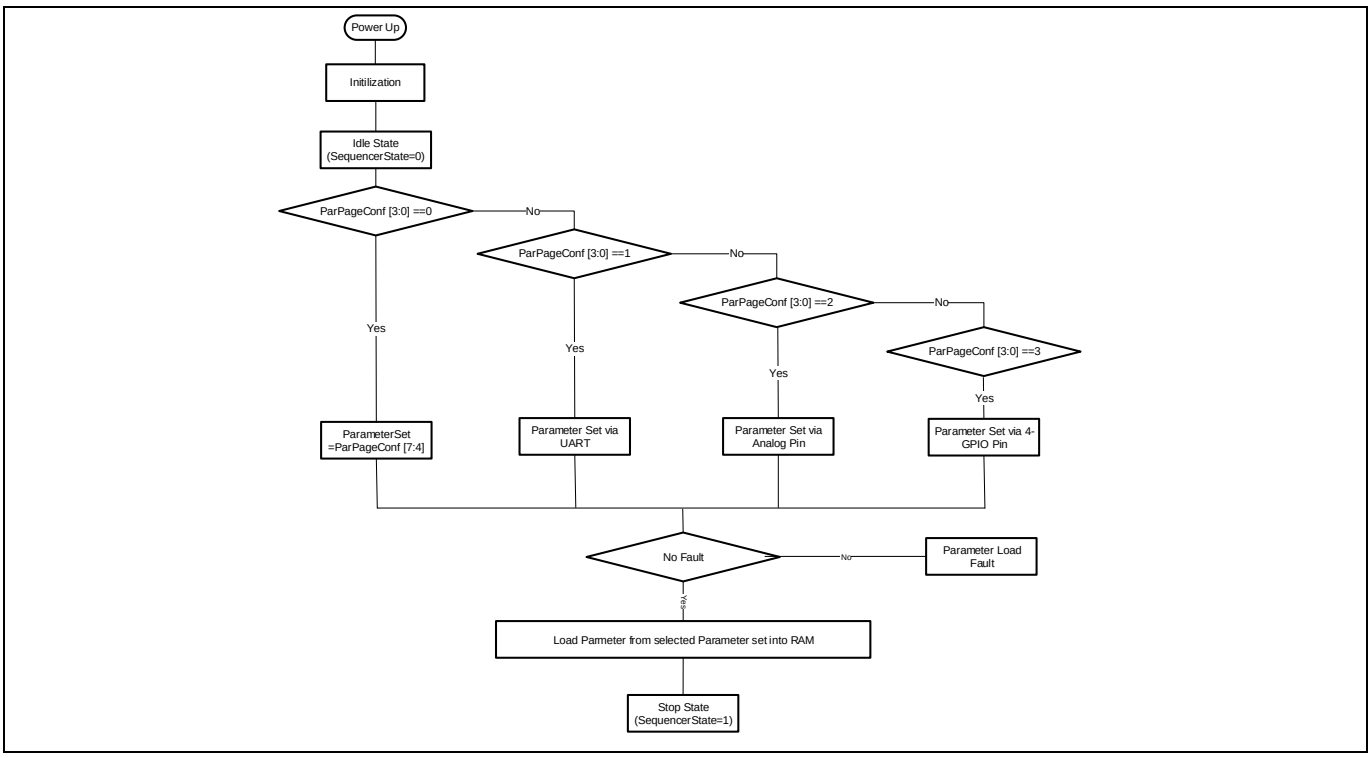

Figure 38 Parameter Load Procedure

2.4.3 Parameter load fault

If there is no parameter data available in the selected parameter block, MCE stays in IDLE state. It is not possible to start the motor from IDLE state. If there is no valid parameter data is available in the selected parameter block, MCE report parameter load fault and stays in IDLE state. In this condition, it is required to load the right parameter data or select right parameter block.

If there is no other fault, the MCE load parameter values into RAM then go to STOP state and is ready to run the motor.

3 Register Description

This chapter describes the registers used in MCE. Parameters and variables are scaled within the 16 bit fixed point data range to represent floating-point quantities of the physical value (e.g.: in SI units).

There are two types of parameters used in MCE:

- STATIC : These type of parameters only can be modified/configured from MCEWizard and read from MCEDesigner
- DYNAMIC: These types of parameters can be modified/configured from MCEWizard and read/ write from MCEDesigner

3.1 System Control Register (App ID =0)

3.1.1 ParPageConf

Index	0		
Size	Unsigned 16 bit		
Parameter Type	STATIC		
Range	Min: 0	Max:0xFFFF	Default: 0
Scaling or Notation:	Bit field defined		
Description:	This parameter defines parameter page selection method and default parameter page [3:0] Parameter page selection 0- No Selection 1- Parameter page selection via UART 2- Parameter page selection via Analog input 3- Parameter page selection via digital input [7:4] Default parameter page number [15:8] Reserved		

3.1.2 SysTaskTime

Index	62		
Size	Unsigned 16 bit		
Parameter Type	STATIC		
Range	Min: 0	Max:1000	Default: 1
Scaling or Notation:	1 count = 1ms		
Description:	This parameter defines the execution rate of state machine.		

3.1.3 CPU Load

Index	80		
Size	Unsigned 16 bit		
Variable Type	Read Only		
Range	Min: 0	Max:1000	Default: 0
Scaling or Notation:	CPU load is represented in %. 1 = 0.1%		
Description:	CPU load is calculated in real-time. This parameter holds the value of CPU load value.		

3.1.4 FeatureID_selectH

Index	61		
Size	Unsigned 16 bit		
Parameter Type	STATIC		
Range	Min: 0	Max:0xFFFF	Default: 0

Scaling or Notation: Bit field defined

Description: This parameter defines enable or disable motor control and PFC

[0] Enable PFC : 0-Disable, 1 -Enable

[7:1] Reserved

[8] Enable Motor control : 0-Disable, 1 -Enable

[15:9] Reserved

3.1.5 GKConf

Index	22		
Size	Unsigned 16 bit		
Parameter Type	STATIC		
Range	Min: 0	Max:0xFFFF	Default: 0

Scaling or Notation: Bit field defined

Description: This parameter defines gate kill input source for motor control and pfc.

Refer section 0

[1:0] Comparator 0 usage : 0- used by motor, 1- used by PFC

[2] Comparator 0 enable : 0-Disable, 1 -Enable

[4:3] Comparator 1 usage : 0- used by motor, 1- used by PFC

[5] Comparator 1 enable : 0-Disable, 1 -Enable

[7:6] Comparator 2 usage : 0- used by motor, 1- used by PFC

[8] Comparator 2 enable : 0-Disable, 1 -Enable

[10:9] Comparator 3 usage : 0- used by motor, 1- used by PFC

[11] Comparator 3 enable : 0-Disable, 1 -Enable

[12] Motor control gate kill pin enable :0- Disable, 1 -Enable

[15:13] Reserved

3.1.6 SW_Version

Index	82		
Size	Unsigned 16 bit		
Variable Type	Read Only		
Range	Min: 0	Max:0xFFFF	Default: 0

Scaling or Notation: Bit field defined

Description: SW version scheme - 4:6:6 Bit Coding

[5:0] Test version

[11:6] Minor version

[15:12] Major version

3.2 Motor Control Register (App ID =1)

Complete list of parameter and variables are listed in the Table 13 and Table 14 and find description in the following chapters.

Table 13 Motor control Parameter list

App ID	Index	Parameter Name	Type	Description
1	1	HwConfig	STATIC	Application hardware configuration parameter
1	2	SysConfig	STATIC	System configuration parameter
1	3	AngleSelect	DYNAMIC	Angle selection from flux or open loop or external
1	4	CtrlModeSelect	DYNAMIC	Control mode : Speed control, Current control or Voltage control
1	5	PwmFreq	STATIC	Motor PWM frequency
1	6	PwmDeadtimeR	STATIC	PWM dead time during leading edge (raising edge of high side switch output)
1	7	PwmDeadtimeF	STATIC	PWM dead time during trailing edge (falling edge of high side switch output)
1	8	SHDelay	DYNAMIC	Switch delay from PWM output to ADC sample time to avoid ADC sample during switching
1	9	TMinPhaseShift	DYNAMIC	Minimum time of an active vector for single shunt current measurement in phase shift PWM mode
1	10	TCntMin	DYNAMIC	Minimum time of an active vector for single shunt current measurement (minimum pulse width method)
1	11	PwmGuardBand	DYNAMIC	Minimum time of null vector for phase current measurement
1	12	FaultEnable	DYNAMIC	Enable or disable fault condition handling. When a fault bit is not set, the fault condition is ignored
1	13	VdcOvLevel	DYNAMIC	DC bus over voltage trip level
1	14	VdcUvLevel	DYNAMIC	DC bus under voltage trip level
1	15	CriticalOvLevel	DYNAMIC	DC bus critical over voltage trip level
1	16	RotorLockTime	DYNAMIC	Rotor lock fault detection time
1	18	FluxFaultTime	DYNAMIC	PLL out of synchronous fault detection time
1	19	GatekillFilterTime	STATIC	Persistence filter time for PWM gate kill input
1	20	CompRef	STATIC	Overcurrent trip level for gate kill input
1	21	BtsChargeTime	DYNAMIC	Bootstrap capacitor charging time
1	22	TCatchSpin	DYNAMIC	Catch spin synchronization time duration before engaging motor start acceleration
1	23	DirectStartThr	DYNAMIC	Catch Spin threshold speed limit for free running motor that decides whether to run directly in close loop FOC or configured startup mode
1	24	ParkTime	DYNAMIC	Total parking time of the rotor during startup
1	25	ParkAngle	DYNAMIC	Rotor alignment angle during parking
1	26	OpenloopRamp	DYNAMIC	Open loop speed acceleration rate
1	27	IS_Pulses	DYNAMIC	Number of PWM cycles for each inductor sensing pulse under nominal DC bus voltage
1	28	IS _Duty	DYNAMIC	PWM duty cycle during ANGLE_SENSING

App ID	Index	Parameter Name	Type	Description
1	29	IS_IqInit	DYNAMIC	Initial torque been applied after done ANGLE_SENSING stage and before entering MOTOR_RUN.
1	30	KpSreg	DYNAMIC	Proportional gain of the speed regulator
1	31	KxSreg	DYNAMIC	Integral gain of the speed regulator
1	32	MotorLim	DYNAMIC	Maximum allowable motor current (d axis and q axis)
1	33	RegenLim	DYNAMIC	Maximum allowable motor current (d axis and q axis)while motor is running in regenerative mode
1	34	RegenSpdThr	DYNAMIC	Switch over speed threshold between RegenLim and MotorLim motor current limits
1	35	LowSpeedLim	DYNAMIC	Maximum allowable motor current (d axis and q axis) at low speed
1	36	LowSpeedGain	STATIC	Increment rate of Motor current limit after Minspd Threshold
1	37	SpdRampRate	DYNAMIC	close loop speed acceleration rate
1	38	MinSpd	DYNAMIC	Minimum allowed drive operating speed
1	39	Rs	STATIC	Per phase winding resistance of the motor
1	40	Lo	STATIC	Per phase winding inductance of the motor at rated current
1	41	LSIncy	STATIC	Saliency inductance of the motor
1	42	VoltScl	STATIC	Internal scaling factor between voltage and flux
1	43	PllKp	DYNAMIC	Angle Frequency Generator tracking proportional gain
1	44	PllKi	DYNAMIC	Angle Frequency Generator tracking integral gain
1	45	PllFreqLim	DYNAMIC	Frequency limit of the PLL integral gain output
1	46	AngMTPA	DYNAMIC	Angle compensation
1	47	FlxTau	STATIC	Define by flux estimator time constant. Used to adjustment for the flux estimator bandwidth.
1	48	AtanTau	DYNAMIC	Angle compensation for the phase shift introduced by flux integration time constant
1	49	SpeedScalePsc	STATIC	Speed scale prescaler value. Used for internal scaling between rotor frequency and motor speed
1	50	SpeedScale	STATIC	Internal scaling factor between rotor frequency and motor speed. Convert rotor frequency to motor speed
1	51	SpeedScaleRcp	STATIC	Internal scaling factor between rotor frequency and motor speed. Convert motor speed to rotor frequency
1	52	SpdFiltBW	DYNAMIC	Low pass filter time constant for motor Speed estimation
1	53	PGDeltaAngle	STATIC	PG output configuration, defines number of pulses per motor revolution
1	54	IfbkScl	STATIC	Internal scaling factor between alpha/beta current 1to d/q current. Current scale to represent d axis and q axis current rated motor current.
1	55	KpIreg	DYNAMIC	Proportional gain of q-axis current regulator
1	56	KpIregD	DYNAMIC	Proportional gain of d-axis current regulator

App ID	Index	Parameter Name	Type	Description
1	57	KxIreg	DYNAMIC	Integral gain of d- and q-axis current regulator
1	58	FwkLevel	DYNAMIC	Modulation threshold to start field weakening
1	59	FwkKx	DYNAMIC	Gain of field weakening control
1	60	FwkCurRatio	DYNAMIC	–Id current limit for field weakening
1	61	VdqLim	DYNAMIC	Current regulator output limit
1	62	AngDel	DYNAMIC	Gain adjustment for current angle advancement
1	63	AngLim	DYNAMIC	Maximum limit on the current angle phase advancement
1	64	IdqFiltBW	DYNAMIC	low pass filter time constant for Id and Iq
1	65	Pwm2PhThr	DYNAMIC	Switch over speed from 3 phase PWM to 2 phase PWM
1	66	TDerating	STATIC	Reserved for future use.
1	67	TShutdown	DYNAMIC	Over-temperature shutdown threshold
1	68	CmdStop	STATIC	Motor stop threshold value for Vsp/frequency/duty cycle control inputs. If the input value is less than threshold, motor will be stopped.
1	69	CmdStart	STATIC	Motor start threshold value for Vsp/frequency/duty cycle control inputs. If the input value is more than threshold, motor will be started.
1	70	CmdGain	STATIC	Slope of set speed value for Vsp/frequency/duty cycle control inputs.
1	71	AppConfig	DYNAMIC	Application configuration Parameter
1	72	NodeAddress	STATIC	Node Address
1	73	PrimaryControlLoop	DYNAMIC	Primary control loop
1	74	PhaseLossLevel	DYNAMIC	Phase loss detection current level
1	75	TrqCompGain	DYNAMIC	Torque Compensation gain maximum value
1	76	TrqCompAngOfst	DYNAMIC	Torque Compensation angle offset value
1	77	TrqCompLim	DYNAMIC	Torque Compensation limit value
1	78	TrqCompOnSpeed	DYNAMIC	Torque Compensation ON speed threshold value
1	79	TrqCompOffSpeed	DYNAMIC	Torque Compensation OFF speed threshold value
1	80	PolePair	DYNAMIC	Motor pole pair value

Table 14 Motor control Variable list

App ID	Index	Variable Name	Type	Description
1	120	Command	READWRITE	Controls the system state - Stop/ start the motor
1	121	TargetSpeed	READWRITE	Target speed of the motor, when the drive is in speed control mode.
1	122	Iu	READONLY	Reconstructed motor phase U current
1	123	Iv	READONLY	Reconstructed motor phase V current
1	124	Iw	READONLY	Reconstructed motor phase W current
1	125	MotorSpeed	READONLY	Filtered motor running speed
1	126	I_Alpha	READONLY	Ialpha current
1	127	I_Beta	READONLY	Ibeta current
1	128	IdRef_Ext	READWRITE	Current command on d axis, when the drive is in

App ID	Index	Variable Name	Type	Description
				current control mode.
1	129	IqRef_Ext	READWRITE	Current command on q axis, when the drive is in current control mode.
1	130	Vd_Ext	READWRITE	Vd command when the drive is in voltage control mode.
1	131	Vq_Ext	READWRITE	Vq command when the drive is in voltage control mode.
1	132	SwFaults	READONLY	Drive fault status based on fault condition and fault mask
1	133	SequencerState	READONLY	Current state of the drive
1	134	FaultClear	READWRITE	Fault clear
1	135	FaultFlags	READONLY	Drive fault status based on fault condition
1	136	VdcRaw	READONLY	DC bus voltage
1	137	VdcFilt	READONLY	DC bus filtered voltage
1	138	FluxAngle	READONLY	Estimated rotor Angle
1	139	Flx_M	READONLY	Fundamental flux amplitude
1	140	abs_MotorSpeed	READONLY	Absolute motor speed
1	141	IdFilt	READONLY	Id current filter value
1	142	IqFilt	READONLY	Iq current filter value
1	143	IdFwk	READWRITE	Id field weakening current value
1	144	VTH	READONLY	NTC temperature value
1	145	FluxAlpha	READONLY	Flux alpha component value
1	146	FluxBeta	READONLY	Flux beta component value
1	147	Flx_Q	READONLY	Net Flux on Q axis value
1	148	TrqRef	READONLY	Torque Reference, Speed PI output
1	149	Id	READONLY	Id current value
1	150	Iq	READONLY	Iq current value
1	151	V_Alpha	READONLY	Voltage alpha component value
1	152	V_Beta	READONLY	Voltage beta component value
1	153	SpeedError	READONLY	Speed PI error value
1	154	MotorCurrent	READONLY	Motor current value
1	155	OpenLoopAngle	READONLY	Open loop Angle
1	156	Vd	READONLY	Motor Vd voltage value
1	157	Vq	READONLY	Motor Vq voltage value
1	158	MotorVoltage	READONLY	Motor voltage value
1	159	TrqRef_Comp	READONLY	Torque Compensation output value

3.2.1 Control Register Group

3.2.1.1 HwConfig

Index	1		
Size	Unsigned 16 bit		
Parameter Type	STATIC		
Range	Min: 0	Max: 0xFFFF	Default: 0x0120

Scaling or Notation: Bit field definitions are mentioned in description

Description: Motor control application hardware configuration parameter

[0] Current Shunt Type
- 0- Single Shunt current sensing
- 1- Leg Shunts current sensing (2 Phase current sensing)

[2:1] Reserved

[4:3] PWM Mode
- 0- 3 Phase PWM only
- 3- 2 Phase Type 3 PWM

[5] Minimum Pulse (single shunt only)
- 0- Use phase shift for narrow pulse
- 1- Use minimum pulse for narrow pulse

[6] Active polarity for Low side PWM outputs
- 0- Active level is low
- 1- Active level is high

[7] Active polarity for High side PWM outputs
- 0- Active level is low
- 1- Active level is high

[8:9] Internal gain for current measurement
- 0- Internal gain is 1
- 1- Internal gain is 3
- 2- Internal gain is 6
- 3- Internal gain is 12

[15:10] Reserved

Attention: ***In MCEWizard current shunt type shall be configured as per actual hardware. Wrong configuration may leads to damage of switches due to over current.***

Attention: ***In MCEWizard active polarity of high side and low side switches shall be configured as per actual hardware. Wrong configuration may lead to short circuits in switches.***

3.2.1.2 SysConfig

Index	2		
Size	Unsigned 16 bit		
Parameter Type	STATIC		
Range	Min: 0	Max: 0xFFFF	Default: 0x0005
Scaling or Notation:	Bit field definitions are mentioned in description		
Description:	Motor control system configuration parameter [0] DC bus voltage compensation 0- Disabled 1- Enabled [1] Reserved [5:2] Execution rate for current control loop. 1- Current control loop executed every PWM period 2- Current control loop executed every 2 PWM period … 15- Current control loop executed every 15 PWM period [15:10] Reserved		

3.2.1.3 AngleSelect

Index	3		
Size	Unsigned 16 bit		
Parameter Type	DYNAMIC		
Range	Min: 0	Max: 2	Default: 2
Scaling or Notation:	See description		
Description:	This parameter used to select the rotor angle 0- Open loop angle, rotating speed is configured by parameter "TargetSpeed", if Targetspeed=0, open loop angle is fixed can be changed by writing a value to parameter "OpenLoopAngle" 2- Flux estimator angle		

3.2.1.4 CtrlModeSelect

Index	4		
Size	Unsigned 16 bit		
Parameter Type	DYNAMIC		
Range	Min: 0	Max: 2	Default: 2
Scaling or Notation:	See description		
Description:	This parameter used to select one of three control modes: 0- Open loop voltage control mode, voltage command is Vd_Ext and Vq_Ext 1- Current control mode, current command is IdRef_Ext and IqRef_Ext 2- Speed control mode, speed command is TargetSpeed		

3.2.1.5 APPConfig

Index	71		
Size	Unsigned 16 bit		
Parameter Type	DYNAMIC		
Range	Min: 0	Max: 0xFFFF	Default: 0
Scaling or Notation:	Bit field definitions are mentioned in description		
Description:	Motor control system configuration parameter [2:0] Control input selection (Set target speed value) 1- UART control 2- Vsp analog input 3- Frequency input 4- Duty cycle input [3] Enable Restart after Fault: Vsp, frequency or duty cycle control input mode, if there is fault condition, motor will stop and start a 10seconds counter. After 10 seconds, the control will try to clear the fault for 10 times. If the fault condition still exists, control will stay in fault condition. This feature is not available in UART control mode. [15:4] Reserved		

3.2.1.6 PrimaryControlRate

Index	73		
Size	Unsigned 16 bit		
Parameter Type	DYNAMIC		
Range	Min: 1	Max: 16	Default: 2
Scaling or Notation:	See description		
Description:	This parameter defines the execution rate of speed control loop. Speed control loop executed every Fast Control Rate*Primay control rate* PWM period. Speed ramp rate is calculated based on this value.		

3.2.1.7 Command

Index	120		
Size	Unsigned 16 bit		
Variable Type	Read Write		
Range	Min: 0	Max: 1	Default: 0
Scaling or Notation:	See description		
Description:	This variable controls the system state with the following values: 0- Stop the motor 1- Start the motor		

3.2.1.8 SequencerState

Index	133		
Size	Unsigned 16 bit		
Variable Type	Read Only		
Range	Min: 0	Max: 9	Default: 0
Scaling or Notation:	See description		
Description:	This variable contains the current sequence state of the drive 0- Power on state 1- Stop state 2- Calculate offset current 3- Charging boot strap capacitors 4- Motor running 5- Fault state 6- Catch spin 7- Parking 8- Open loop acceleration 9- Angle Sensing (Initial rotor angle detection)		

3.2.2 PWM Register Group

3.2.2.1 PwmFreq

Index	5		
Size	Unsigned 16 bit		
Parameter Type	STATIC		
Range	Min: 20	Max:800	Default:160
Scaling or Notation:	1 = 0.1 kHz F_{PWM} ; 160 = 16kHz F_{PWM}		
Description:	This parameter configures the motor PWM frequency in 0.1 kHz increment. PWM Period value = 96,000,000/(2*PWMFreq[Hz])		

3.2.2.2 PWMDeadtimeR

Index	6		
Size	Unsigned 16 bit		
Parameter Type	STATIC		
Range	Min: 0	Max:240	Default:48
Scaling or Notation:	$1 = 20.8333ns$		
Description:	PWM dead time during leading edge (raising edge of high side switch output)		

3.2.2.3 PWMDeadtimeF

Index	7		
Size	Unsigned 16 bit		
Parameter Type	STATIC		
Range	Min: 0	Max:240	Default:48
Scaling or Notation:	$1 = 20.8333ns$		
Description:	PWM dead time during trailing edge (falling edge of high side switch output)		

3.2.2.4 SHDelay

Index	8		
Size	Unsigned 16 bit		
Parameter Type	DYNAMIC		
Range	Min: 0	Max:960	Default: 0
Scaling or Notation:	$1 = 10.4167ns$		
Description:	SHDelay specifies the time delay from PWM output to ADC sample time for current sensing. The delay time is depending on the hardware design; usually it should consider propagation delay of gate driver circuit and turn on (turn off) delay of switching devices. In Phase Shift PWM mode, in order to avoid sample the shunt resistor signal while device is switching, SHDelay should be configured smaller than actual hardware delay. Some board design may allow bigger SHDelay value without causing much current sensing noise (bigger SHDelay value may help for a smaller TMinPhaseShift value). In Minimum Pulse PWM mode, SHDelay should be configured same as actual hardware delay.		

3.2.2.5 TMinPhaseShift

Index	9		
Size	Unsigned 16 bit		
Parameter Type	DYNAMIC		
Range	Min: 0	Max:960	Default: 0
Scaling or Notation:	$1 = 10.4167ns$		
Description:	In Phase Shift PWM mode, TMinPhaseShift configure the minimum time of an active vector for single shunt current sensing.		

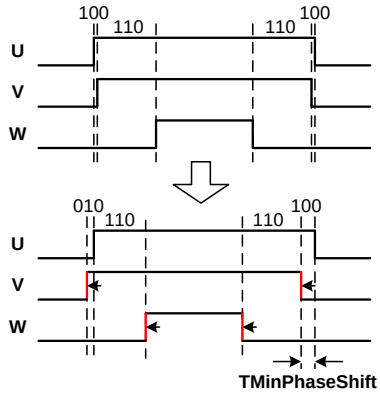

Figure 39 TminphaseShift PWM

3.2.2.6 TCntMin

Index	10		
Size	Unsigned 16 bit		
Parameter Type	DYNAMIC		
Range	Min: 0	Max:960	Default: 0
Scaling or Notation:	$1 = 10.4167ns$		
Description:	This parameter specifies the minimum PWM pulse width if minimum pulse width method is being used.		

3.2.2.7 PwmGuardBand

Index	11		
Size	Unsigned 16 bit		
Parameter Type	DYNAMIC		
Range	Min: 0	Max:960	Default: 0
Scaling or Notation:	$1 = 10.4167ns$		
Description:	In leg shunt configuration, this parameter provides a guard band such that PWM switching at high modulation cannot migrate into the beginning and end of a PWM cycle. The guard band insertion can improve feedback noise immunity for signals sampled near the beginning and end of a PWM cycle. Guard band insertion will reduce the maximum achievable inverter output voltage.		

3.2.2.8 Pwm2PhThr

Index	65		
Size	Unsigned 16 bit		
Parameter Type	DYNAMIC		
Range	Min: 0	Max:32767	Default: 0
Scaling or Notation:	16383= Motor Max RPM		
Description:	Switch over speed from 3 phase PWM to 2 phase PWM. When the motor's absolute speed reach or above Pwm2PhThr, PWM will change to the mode configured in HwConfig [4:3]. When the motor speed reduced to below Pwm2PhThr-256, PWM scheme will return to 3 phase PWM. If the value of Pwm2PhThr is 256 or below, and HwConfig[4:3] is configured 3 after PWM mode change to 2 phase PWM, it will not return to 3 phase PWM automatically unless stop the motor and start again.		

3.2.3 Speed Control Register Group

3.2.3.1 KpSreg

Index	30		
Size	Unsigned 16 bit		
Parameter Type	DYNAMIC		
Range	Min: 0	Max:32767	Default:63
Scaling or Notation:	U8.8		
Description:	This parameter specifies the proportional gain of the speed regulator.		

3.2.3.2 KxSreg

Index	31		
Size	Unsigned 16 bit		
Parameter Type	DYNAMIC		
Range	Min: 0	Max:32767	Default:12
Scaling or Notation:	U0.16		
Description:	This parameter specifies the integral gain of the speed regulator		

3.2.3.3 MotorLim

Index	32		
Size	Unsigned 16 bit		
Parameter Type	DYNAMIC		
Range	Min: 0	Max:16383	Default:4095
Scaling or Notation:	4095 = 100% motor rated current		
Description:	This parameter specifies the maximum allowable total motor current (d axis and q axis)		

3.2.3.4 RegenLim

Index	33		
Size	Unsigned 16 bit		
Parameter Type	DYNAMIC		
Range	Min: 0	Max:16383	Default:409
Scaling or Notation:	4095= 100% motor rated current		
Description:	This parameter specifies the maximum total motor current (d axis and q axis) while motor is running in regenerative mode. RegenLim should be set to a low value if the drive has no break resistor otherwise regenerative current will raise the DC bus voltage and cause fault condition.		

3.2.3.5 RegenSpdThr

Index	34		
Size	Unsigned 16 bit		
Parameter Type	DYNAMIC		
Range	Min: 0	Max:16383	Default:600
Scaling or Notation:	16383 = Motor Max RPM		
Description:	This parameter specifies the switch over speed threshold between RegenLim and MotorLim.		

3.2.3.6 LowSpeedLim

Index	35		
Size	Unsigned 16 bit		
Parameter Type	DYNAMIC		
Range	Min: 0	Max:16383	Default:2047
Scaling or Notation:	4095 = 100% motor rated current.		
Description:	This parameter specifies the maximum allowable motor current (d axis and q axis) at low speed (motor speed value less than or equal to Minspd value). Refer section 2.1.5 for more information.		

3.2.3.7 LowSpeedGain

Index	36		
Size	Unsigned 16 bit		
Parameter Type	STATIC		
Range	Min: 0	Max:65535	Default: 0
Scaling or Notation:	U16.0		
Description:	This parameter specifies the increment rate of Motor current limit between MinSpd and low speed threshold. Refer section 2.1.5 for more information.		

3.2.3.8 SpdRampRate

Index	37		
Size	Unsigned 16 bit		
Parameter Type	DYNAMIC		
Range	Min: 0	Max:32767	Default: 0
Scaling or Notation:	See description		
Description:	This parameter specifies the ramp rate of target speed reference		

$$Speed\ ramp\ rate = \frac{SpdRampRate * F_{PWM} * MaxRPM}{FastControlRate * PirmarycControlRate * 2^{25}}, in\ RPM/s$$

3.2.3.9 MinSpd

Index	38		
Size	Unsigned 16 bit		
Parameter Type	DYNAMIC		
Range	Min: 0	Max:16363	Default:600
Scaling or Notation:	16383 = Motor Max RPM		
Description:	This parameter configures the minimum motor speed. Motor will run at MinSpd when the target motor speed is below MinSpd.		

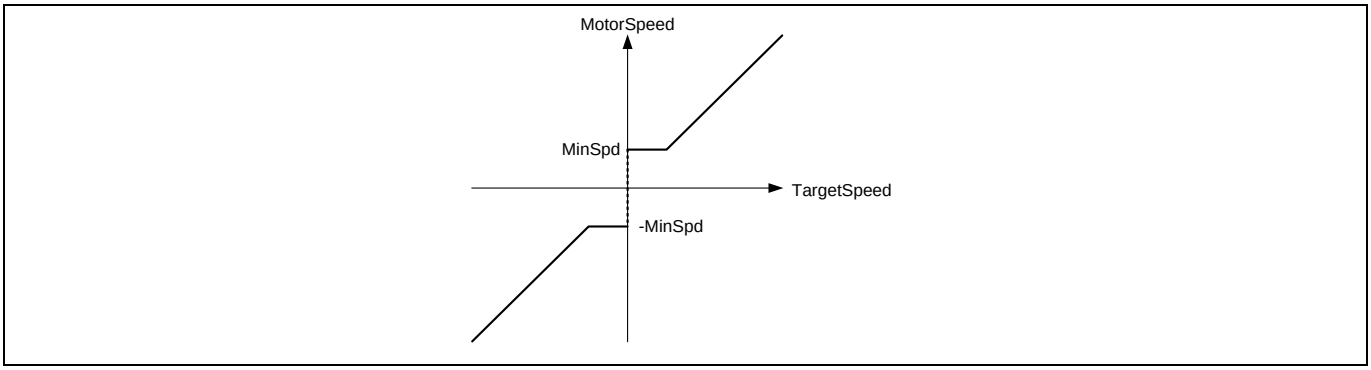

Figure 40 Minimum Speed

3.2.3.10 TargetSpeed

Index	121		
Size	Signed 16 bit		
Variable Type	Read Only		
Range	Min: -32767	Max:32767	Default: 0
Scaling or Notation:	16383 = Motor Max RPM		
Description:	This variable sets the target speed of the motor, when the drive is in speed control mode. If the motor is running in Vsp analog input, frequency input or duty cycle control, this variable will be updated by software and writing to it has no effect.		

3.2.3.11 TrqRef

Index	148		
Size	Signed 16 bit		
Variable Type	Read Only		
Range	Min: -4095	Max:4095	Default: 0
Scaling or Notation:	4095= 100% motor rated RMS current		
Description:	This variable holds the value of Speed PI output value.		

3.2.4 Flux Estimation PLL Register Group

3.2.4.1 Rs

Index	39		
Size	Unsigned 16 bit		
Parameter Type	STATIC		
Range	Min: 0	Max:65535	Default: 0
Scaling or Notation:	See description.		
Description:	This parameter specifies the motor per phase equivalent (motor + cable) resistance at 25° C. The scaling between the actual motor resistances (Ohms) and this parameter depends on drive voltage and current scaling. The relationship between the actual resistance in ohms and Rs is formulated in MCEWizard.		

3.2.4.2 Lo

Index	40		
Size	Unsigned 16 bit		
Parameter Type	STATIC		
Range	Min: 0	Max:65535	Default: 0
Scaling or Notation:	See description.		
Description:	This parameter specifies the apparent inductance of the motor and it is used by the flux estimator. It is proportional to: $\frac{Ld + Lq}{2}$ Where Ld and Lq are the d and q axis motor inductance. The scaling between the actual inductance in Henry and this parameter is formulated in MCEWizard.		

3.2.4.3 LSIncy

Index	41		
Size	Unsigned 16 bit		
Parameter Type	STATIC		
Range	Min: 0	Max:65535	Default: 0
Scaling or Notation:	See description.		
Description:	This parameter specifies the apparent saliency inductance of the motor. It is proportional to: $\frac{Lq - Ld}{2}$ Where Ld and Lq are the d and q axis motor inductance. Typically, Lq/Ld ≈ 1 for Surface PM motors and 1.2 < Lq/Ld < 2.5 for Interior Permanent Magnet motors. The scaling between the actual inductance in Henry and this parameter is formulated in MCEWizard.		

3.2.4.4 VoltScl

Index	42		
Size	Unsigned 16 bit		
Parameter Type	STATIC		
Range	Min: 0	Max: 65535	Default: 0
Scaling or Notation:	See description.		
Description:	This parameter defines the internal scaling factor between voltage and flux. The value of this parameter is calculated by MCEWizard from user input (PWM frequency, motor poles, DC bus scaling and back emf Ke).		

3.2.4.5 PllKp

Index	43		
Size	Unsigned 16 bit		
Parameter Type	DYNAMIC		
Range	Min: 0	Max:32767	Default: 0
Scaling or Notation:	U0.16		
Description:	This parameter specifies the Angle Frequency Generator tracking proportional gain. The Angle Frequency Generator is mainly a phase lock loop (PLL). A larger value of PllKp will increase tracking bandwidth at the expense of increasing speed or frequency ripple.		

3.2.4.6 PllKi

Index	44		
Size	Unsigned 16 bit		
Parameter Type	DYNAMIC		
Range	Min: 0	Max:32767	Default: 0
Scaling or Notation:	U0.16		
Description:	This parameter specifies the Angle Frequency Generator tracking integral gain. The Angle Frequency Generator is mainly a phase lock loop (PLL). The Figure 41 shows both a simplified and the detailed PLL architecture. PllKi relates internal PLL tracking error (q) to frequency (Rtr_Freq). A larger value of PllKi will increase tracking bandwidth at the expense of increasing speed or frequency ripple.		

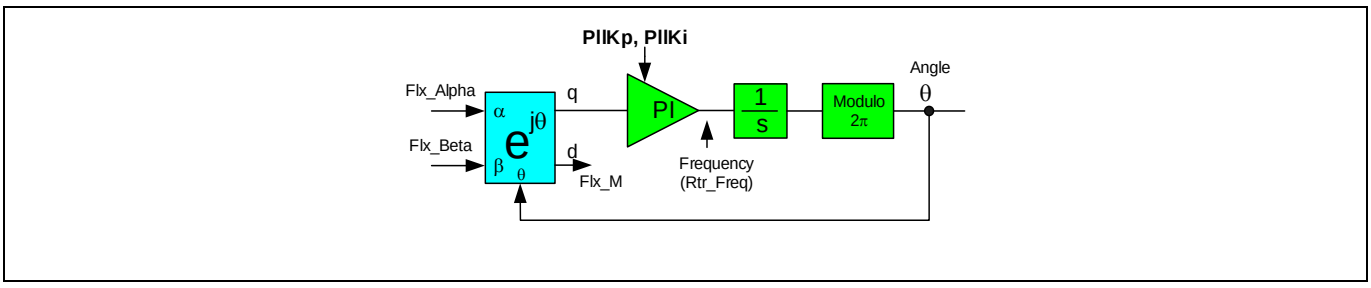

Figure 41 Simplified Block diagram of a FLUX PLL

3.2.4.7 PllFreqLim

Index	45		
Size	Unsigned 16 bit		
Parameter Type	DYNAMIC		
Range	Min: 0	Max: 65535	Default: 0
Scaling or Notation:	See description		
Description:	This parameter specifies the frequency limit of the PLL integral gain output. The relationship between the actual frequency in Hz and this parameter is given by: $A = \frac{PllFreqLim * PwmFreq}{8192}$, *in Hz* where: A - Actual frequency in Hz PwmFreq -Inverter pwm frequency in Hz		

3.2.4.8 FlxTau

Index	47		
Size	Unsigned 16 bit		
Parameter Type	STATIC		
Range	Min: 0	Max:65535	Default: 0
Scaling or Notation:	See description		
Description:	Motor flux is calculated by integration of estimated voltages. Pure (ideal) integrator cannot be used due to dc offset problem. The integration is done using non-ideal integrator (low pass filter) as shown in the Figure 42. The flux integration time constant (Tau) is an entry of the MCEWizard. Typical range of non-ideal integrator time constant is in the range of 0.01 to 0.025 sec. This parameter provides the adjustment for the flux estimator bandwidth. FlxTau is inversely proportional to the "Flux estimator time constant" entered in MCEWizard. The relationship of the Flux estimator time constant and FlxTau is given by: $Flux\ estimator\ time\ constant = \frac{2^{18} \times T_{PWM}}{FlxTau} - T_{PWM}, in\ seconds$ where FlxTm - the Flux estimator time constant[S] T_{PWM} - 1/(PWM switching frequency) [S] This parameter is also used as low pass filter time constant for rotor frequency (Rtr_Freq, which is the output of flux PLL) as well as some internal filtering.		

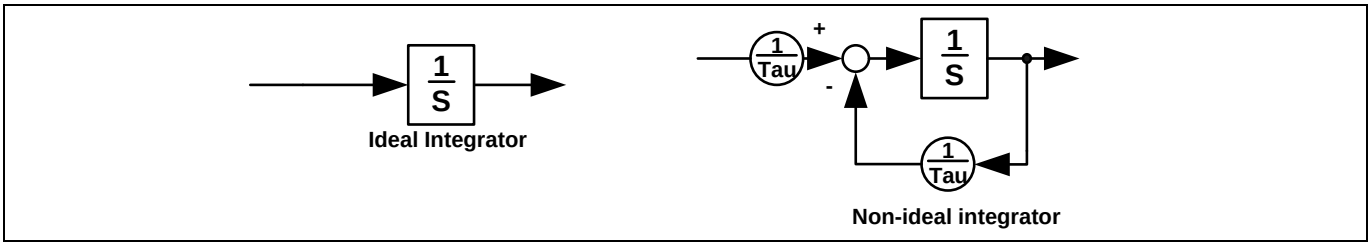

Figure 42 Ideal and Non-ideal Integrator

3.2.4.9 AtanTau

Index	48		
Size	Unsigned 16 bit		
Parameter Type	DYNAMIC		
Range	Min: 0	Max:65535	Default: 0
Scaling or Notation:	See description		
Description:	This parameter provides angle compensation (frequency dependent) for the phase shift introduced by flux integration time constant. Rotor frequency (Rtr_Freq) is multiplied by a time constant (AtanTau) to form a compensating angle. This angle represents the phase shift introduced by the non-ideal flux integrators (low pass filter). Pure (ideal) integrator cannot be used due to dc offset problem. The flux integration time constant is an entry of the MCEWizard. Typical range of integrator time constant is in the range of 0.01 to 0.025 sec.		

3.2.4.10 AngMTPA

Index	46		
Size	Unsigned 16 bit		
Parameter Type	DYNAMIC		
Range	Min: 0	Max:65535	Default: 0
Scaling or Notation:	0°→+360° is represented as 0 to 65535		
Description:	This parameter defines the angle compensation for rotor angle calculation		

3.2.4.11 SpdFiltBW

Index	52		
Size	Unsigned 16 bit		
Parameter Type	DYNAMIC		
Range	Min: 0	Max:16383	Default: 0
Scaling or Notation:	U2.14, $\tau = \frac{16384}{SpdFiltBw}, in\ T_{PWM}$		
Description:	This parameter configures the low pass filter time constant for motor Speed. Please note that the input of motor speed calculation low pass filter is rotor frequency (Rtr_Freq), which has already been filtered by FreqBW.		

3.2.4.12 SpeedScale

Index	50		
Size	Unsigned 16 bit		
Parameter Type	STATIC		
Range	Min: 0	Max: 65535	Default: 0
Scaling or Notation:	See Description		
Description:	This parameter is the internal scaling factor between rotor frequency and motor speed. The value of this parameter is calculated by MCEWizard tool from user input (PWM frequency, motor poles and motor maximum speed).		

3.2.4.13 MotorSpeed

Index	125		
Size	Signed 16 bit		
Variable Type	Read Only		
Range	Min: -32767	Max:32767	Default: 0
Scaling or Notation:	16383 = Motor Max RPM		
Description:	Filtered motor running speed. Filter timer constant is set by parameter SpdFiltBW. Its value will be reset to 0 when the control is not in RUN state.		

3.2.4.14 FluxAngle

Index	138		
Size	Signed 16 bit		
Variable Type	Read Only		
Range	Min: -32768	Max:32767	Default: 0
Scaling or Notation:	-180°→+180° is represented as -32768 to +32767		
Description:	This is the estimated rotor angle. It is used for the Field-Oriented control reference frame.		

3.2.4.15 Flx_M

Index	139		
Size	Unsigned 16 bit		
Variable Type	Read only		
Range	Min: 0	Max:32767	Default: 0
Scaling or Notation:	2048 = 100% rated flux		
Description:	This variable represents the fundamental flux amplitude.		

3.2.4.16 Abs_MotorSpeed

Index	140		
Size	Unsigned 16 bit		
Variable Type	Read Only		
Range	Min: 0	Max:32767	Default: 0
Scaling or Notation:	16383 = Motor Max RPM		
Description:	Absolute value of motor Speed.		

3.2.4.17 OpenLoopAngle

Index	155		
Size	Signed 16 bit		
Variable Type	Read Only		
Range	Min: -32768	Max:32767	Default: 0
Scaling or Notation:	-180°→+180° is represented as -32768 to +32767		
Description:	If Angle Select is set to 0, use this variable to specify the internal open loop angle.		

3.2.5 FOC Register Group

3.2.5.1 IfbkScl

Index	54		
Size	Unsigned 16 bit		
Parameter Type	STATIC		
Range	Min: 0	Max:65535	Default: 0
Scaling or Notation:	See description		
Description:	This parameter provides current gain such that 4095 digital counts of d-axis or q-axis current represents rated motor current. IfbkScl is calculated in MCEWizard and is a function of motor rated Amps and analog current scaling. $$IfbkScl = \frac{4095 * 1024}{1.647 * AiBiScale * RatedMotorCurrent * \sqrt{2}}$$ Where : RatedMotorCurrent is in rms Amps $$AiBiScale = \frac{CurrentInput * InternalADCGain * 4095}{Vadcref}, in\ count/Amps$$		

3.2.5.2 KpIreg

Index	55		
Size	Unsigned 16 bit		
Parameter Type	DYNAMIC		
Range	Min: 0	Max:32767	Default: 0
Scaling or Notation:	U4.12		
Description:	This parameter specifies the proportional gain of the Q-axis current regulator. The value of this parameter is calculated by MCEWizard from user input (PWM frequency, motor phase inductance).		

3.2.5.3 KpIregD

Index	56		
Size	Unsigned 16 bit		
Parameter Type	DYNAMIC		
Range	Min: 0	Max:32767	Default: 0
Scaling or Notation:	U4.12		
Description:	This parameter specifies the proportional gain of the d-axis current regulator. The value of this parameter is calculated by MCEWizard from user input (PWM frequency, motor phase inductance, Bandwidth).		

3.2.5.4 KxIreg

Index	57		
Size	Unsigned 16 bit		
Parameter Type	DYNAMIC		
Range	Min: 0	Max:32767	Default: 0
Scaling or Notation:	U0.16		
Description:	This parameter specifies the integral gain of the d-axis and q-axis current regulator. The scaling depends on the current regulator execution rate which is directly related to the pwm frequency. The value of this parameter is calculated by MCEWizard from user input (PWM frequency, motor phase resistance, Bandwidth).		

3.2.5.5 FwkVoltLvl

Index	58		
Size	Unsigned 16 bit		
Parameter Type	DYNAMIC		
Range	Min: 0	Max:PWMPeriod	Default:32
Scaling or Notation:	PWMPeriod = 100% PWM duty cycle.		
Description:	This parameter specifies the modulation threshold to start field weakening. It must be set below PWMPeriod and it's also recommended to set this value below SVPWM linear range (PWMPeriod*0.95). Lower threshold gives more voltage margin which provides better control performance but it will enter field weakening mode earlier. Where : PWMPeriod is 96,000,000/(2*PWMFreq[Hz])		

3.2.5.6 FwkKx

Index	59		
Size	Unsigned 16 bit		
Parameter Type	DYNAMIC		
Range	Min: 0	Max:16383	Default:32
Scaling or Notation:	See description		
Description:	This parameter configures the gain of field weakening.		

3.2.5.7 FwkCurRatio

Index	60		
Size	Unsigned 16 bit		
Parameter Type	DYNAMIC		
Range	Min: 0	Max:16383	Default:32
Scaling or Notation:	4096 = 100% MotorLim.		
Description:	This parameter limits the –Id current for field weakening.		

3.2.5.8 VdqLim

Index	61		
Size	Unsigned 16 bit		
Parameter Type	DYNAMIC		
Range	Min: 0	Max:4974	Default:32
Scaling or Notation:	4974 = 100 [% modulation]		
Description:	This parameter specifies the current regulator output limit. 100% modulation corresponds to the maximum achievable value of the SVPWM. Please note 100% modulation exceeds SVPWM linear range and output will be over-modulated. If over modulation is not expected, maximum modulation should be limited below 86.6% (4974*86.6%=4307). The corresponding rms motor line to line voltage at 100% modulation is $V_{DC}/\sqrt{2}$.		

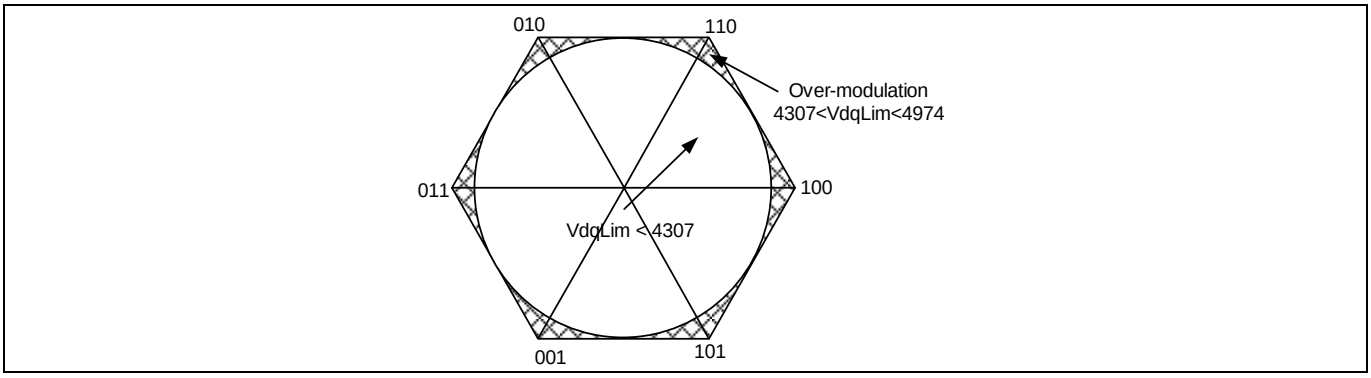

Figure 43 Over modulation

3.2.5.9 AngDel

Index	62		
Size	Unsigned 16 bit		
Parameter Type	DYNAMIC		
Range	Min: 0	Max:65535	Default: 0
Scaling or Notation:	See Description		
Description:	This parameter provides gain adjustment for current angle advancement. The current angle advancement is added to a fixed defaulted phase (90 Deg) and the rotor angle to form the relative phasing of the current vector. Current angle advancement is required for Permanent Magnet motor with rotor saliency (Interior Permanent Magnet Motors). A value of zero represents zero angle advancement and therefore the current vector is placed at 90 degrees with respect to the rotor angle. Diagram below shows the implementation of the angle advancement function and the related controller parameters.		

$$Angle\ advancement = AngDel \times 0.35156 \times \frac{I_Motor}{Rated\ Motor\ Amps}, in\ degree$$

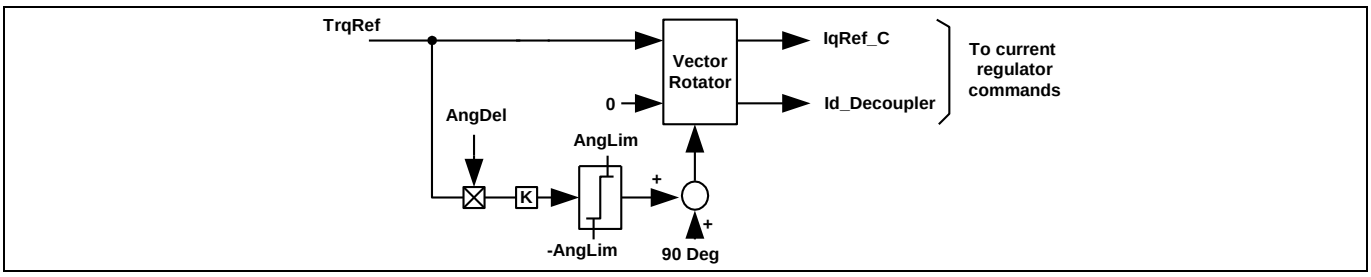

Figure 44 Angle Del

3.2.5.10 AngLim

Index	63		
Size	Unsigned 16 bit		
Parameter Type	DYNAMIC		
Range	Min: 0	Max:65535	Default: 0
Scaling or Notation:	$1 = 0.17578\ degree$		
Description:	This parameter provides the maximum limit on the current angle phase advancement specified by parameter AngDel. (See also AngDel.)		

3.2.5.11 IdqFiltBw

Index	64		
Size	Unsigned 16 bit		
Parameter Type	DYNAMIC		
Range	Min: 0	Max:16383	Default:4096
Scaling or Notation:	U2.14 ; $\tau = \frac{16384}{\mathrm{IdqFiltBw}}$, in $\mathrm{T_{PWM}}$		
Description:	This parameter configures the low pass filter time constant for Id and Iq.		

3.2.5.12 IdRef_Ext

Index	128		
Size	Signed 16 bit		
Variable Type	Read Write		
Range	Min: -16383	Max:16383	Default: 0
Scaling or Notation:	4095 = 100% motor rated RMS current		
Description:	This is the reference input of current regulator on D axis. In speed control mode, this variable has no influence. In current control mode, this variable is used as current input.		

3.2.5.13 IqRef_Ext

Index	129		
Size	Signed 16 bit		
Variable Type	Read Write		
Range	Min: -16383	Max:16383	Default: 0
Scaling or Notation:	4095 = 100% motor rated RMS current		
Description:	This is the reference input of current regulator on D axis. In speed control mode, this variable has no influence. In current control mode, this variable is used as current input.		

3.2.5.14 IdFilt

Index	141		
Size	Signed 16 bit		
Variable Type	Read Only		
Range	Min: -16383	Max:16383	Default: 0
Scaling or Notation:	4096 = 100% motor rated RMS current		
Description:	Id current after low pass filter. LPF gain is set by IdqFiltBw parameter.		

3.2.5.15 IqFilt

Index	142		
Size	Signed 16 bit		
Variable Type	Read only		
Range	Min: -16383	Max:16383	Default: 0
Scaling or Notation:	4096 = 100% motor rated RMS current		
Description:	Iq current after low pass filter. LPF gain is set by IdqFiltBw parameter.		

3.2.5.16 IdFwk

Index	143		
Size	Unsigned 16 bit		
Variable Type	Read only		
Range	Min: -16383	Max:16383	Default: 0
Scaling or Notation:	4096 = 100% motor rated RMS current		
Description:	IdFwk represents the -Id current during field weakening.		

3.2.5.17 Id

Index	149		
Size	Signed 16 bit		
Variable Type	Read Only		
Range	Min: -16383	Max:16383	Default: 0
Scaling or Notation:	4096 = 100% motor rated RMS current		
Description:	This variable holds the motor Id component current		

3.2.5.18 Iq

Index	150		
Size	Signed 16 bit		
Variable Type	Read only		
Range	Min: -16383	Max:16383	Default: 0
Scaling or Notation:	4096 = 100% motor rated RMS current		
Description:	This variable holds the motor Iq component current		

3.2.5.19 MotorCurrent

Index	154		
Size	Signed 16 bit		
Variable Type	Read only		
Range	Min: -16383	Max:16383	Default: 0
Scaling or Notation:	4096 = 100% motor rated RMS current		
Description:	Motor current (IdqFilt) is actual motor phase RMS current. It is calculated as below: $$IdqFilt = (\sqrt{Idfilt^2 + Iqfilt^2})$$		

3.2.6 Measurement Register Group

3.2.6.1 Iu

Index	122		
Size	Signed 16 bit		
Variable Type	Read only		
Range	Min: -2047	Max:2047	Default: 0
Scaling or Notation:	In ADC counts		
Description:	This variable provides reconstructed motor phase U current (offset eliminated and ADC compensated). This current is calculated from the DC bus link current feedback (single shunt configuration) or U phase shunt resistor (leg shunt configuration). It is samples on every PWM cycle.		

3.2.6.2 Iv

Index	123		
Size	Signed 16 bit		
Variable Type	Read only		
Range	Min: -2047	Max:2047	Default: 0
Scaling or Notation:	In ADC counts		
Description:	This variable provides reconstructed motor phase V current (offset eliminated and ADC compensated). This current is calculated from the DC bus link current feedback (single shunt configuration) or V phase shunt resistor (leg shunt configuration). It is samples on every PWM cycle.		

3.2.6.3 IW

Index	124		
Size	Signed 16 bit		
Variable Type	Read only		
Range	Min: -2047	Max:2047	Default: 0
Scaling or Notation:	In ADC counts		
Description:	This variable provides reconstructed motor phase W current (offset eliminated and ADC compensated). This current is calculated from Iu and Iv by equation$Iw = -(Iu + Iv)$. Its value is updated on every PWM cycle.		

3.2.6.4 I_Alpha

Index	126		
Size	Signed 16 bit		
Variable Type	Read only		
Range	Min: -2047	Max:2047	Default: 0
Scaling or Notation:	In ADC counts		
Description:	This variable provides reconstructed motor alpha component current. Its value is updated on every PWM cycle.		

3.2.6.5 I_Beta

Index	127		
Size	Signed 16 bit		
Variable Type	Read only		
Range	Min: -2047	Max:2047	Default: 0
Scaling or Notation:	In ADC counts		
Description:	This variable provides reconstructed motor beta component current. Its value is updated on every PWM cycle.		

3.2.6.6 VdcRaw

Index	136		
Size	Unsigned 16 bit		
Variable Type	Read only		
Range	Min: 0	Max:4095	Default: 0
Scaling or Notation:	In ADC counts		
Description:	This variable provides the measured DC bus voltage value. This value is updated every PWM cycle.		

3.2.6.7 VdcFilt

Index	137		
Size	Unsigned 16 bit		
Variable Type	Read only		
Range	Min: 0	Max:4095	Default: 0
Scaling or Notation:	In ADC counts		
Description:	This variable provides the filtered DC bus voltage value.		

3.2.6.8 VTH

Index	144		
Size	Unsigned 16 bit		
Variable Type	Read only		
Range	Min: 0	Max:4095	Default: 0
Scaling or Notation:	In ADC counts		
Description:	This variable provides NTC temperature input value.		

3.2.7 Protection Register Group

3.2.7.1 FaultEnable

Index	12		
Size	Unsigned 16 bit		
Parameter Type	DYNAMIC		
Range	Min: 0	Max:0xFFFF	Default: 0
Scaling or Notation:	Bit field definitions are mentioned in description. For each bit, 0 – Ignore the associated fault; 1 – enable processing of the associated fault.		
Description:	This parameter specifies enable/disable of faults are mentioned below [1:0] Reserved, must be set to "0" [2] Enable DC bus overvoltage fault [3] Enable DC bus under voltage fault [4] Enable Flux PLL out of control fault [5] Reserved, must be set to "0" [6] Enable Over temperature fault [7] Enable rotor lock fault [8] Enable Phase loss fault [12:9] Reserved, must be set to "0" [13] Enable UART link break fault [15:14] Reserved, must be set to "0" When a fault is disabled (bit set to "0"), the fault condition is ignored and the motor keeps running. However, even when a fault is disabled, its occurrence is reported in the FaultFlags variable, until the condition that caused the fault disappears.		

Note: Phase loss fault is only detected in "PARKING" state.

3.2.7.2 DcBusOvLevel

Index	13		
Size	Unsigned 16 bit		
Parameter Type	DYNAMIC		
Range	Min: 0	Max:4095	Default: 0
Scaling or Notation:	In ADC counts.		
Description:	This parameter defines the dc bus over voltage trip level. A dc bus over voltage fault will be generated if dc bus voltage exceeds this threshold.		

3.2.7.3 DcBusLvLevel

Index	14		
Size	Unsigned 16 bit		
Parameter Type	DYNAMIC		
Range	Min: 0	Max:4095	Default: 0
Scaling or Notation:	In ADC counts.		
Description:	This parameter defines the dc bus under voltage trip level. A dc bus under trip voltage fault will be generated if dc bus voltage falls below this threshold.		

3.2.7.4 CriticalOvLevel

Index	15		
Size	Unsigned 16 bit		
Parameter Type	DYNAMIC		
Range	Min: 0	Max:4095	Default: 0
Scaling or Notation:	In ADC counts.		
Description:	Detection level for Critical Overvoltage. If this threshold is exceeded, all low side switches are clamped (zero-vector-braking) to protect the drive and to brake the motor. The Zero-vector is held until fault is cleared.		

3.2.7.5 RotorLockTime

Index	16		
Size	Unsigned 16 bit		
Parameter Type	DYNAMIC		
Range	Min: 0	Max:65535	Default:1000
Scaling or Notation:	1 = 0.01 Second		
Description:	User can change the value of this parameter to customize the rotor lock detect time (default = 10 seconds). Please note if rotor lock detect time is configured too short, it may trigger the fault during acceleration or momentary high load condition.		

3.2.7.6 PLL_OutSyncTime

Index	18		
Size	Unsigned 16 bit		
Parameter Type	DYNAMIC		
Range	Min: 0	Max: 65535	Default:800
Scaling or Notation:	1 = 0.01 Second		
Description:	User can change the value of this parameter to customize the PLL out of synchronous detect time (default = 8 seconds).		

3.2.7.7 GateKillFilterTime

Index	19		
Size	Unsigned 16 bit		
Parameter Type	STATIC		
Range	Min: 4	Max:960	Default:96
Scaling or Notation:	$1 = 10.4167ns$		
Description:	Persistence filter time for PWM gate kill input (in clock cycles)		

3.2.7.8 CompRef

Index	20		
Size	Unsigned 16 bit		
Parameter Type	STATIC		
Range	Min: 0	Max:4095	Default: 0
Scaling or Notation:	ADC count (4095 = V_{adcref})		
Description:	This parameter value is derived from current trip level and current input offset value. $$CompRef = \frac{((iTripLevel \times CurrentScale) + Offset)}{Vadcref} * 4095$$ Example : iTripLevel = 2A, Current input scale 0.5V/A, Offset =0.55V, Vadcref =3.3V CompRef value is 1924 counts		

3.2.7.9 Tshutdown

Index	67		
Size	Unsigned 16 bit		
Parameter Type	DYNAMIC		
Range	Min: 0	Max:4095	Default: 0
Scaling or Notation:	In ADC counts.		
Description:	This parameter defines the over-temperature shutdown threshold. If actual temperature input value is less than this threshold, trigger over temperature fault.		

3.2.7.10 PhaseLossLevel

Index	74		
Size	Unsigned 16 bit		
Parameter Type	DYNAMIC		
Range	Min: 0	Max:4095	Default: 0
Scaling or Notation:	In ADC counts.		
Description:	This parameter defines the low current threshold value for phase loss detection logic. If any of the phase current value is less than PhaseLossLevel value during end of parking state, trigger phase loss fault. PhaseLossLevel default value is derived from minimum speed limit.		

3.2.7.11 SwFaults

Index	132		
Size	Unsigned 16 bit		
Variable Type	Read only		
Range	Min: 0	Max: 65535	Default: 0
Scaling or Notation:	See description.		
Description:	This variable is derived from FaultFlags by the following bitwise logical operation: $SwFaults = FaultFlags \cdot FaultEnable$ SwFaults is cleared by FaultClear. For bit field definition, refer to Faultflags.		

3.2.7.12 FaultClear

Index	134		
Size	Unsigned 16 bit		
Variable Type	Read Write		
Range	Min: 0	Max:1	Default: 0
Scaling or Notation:	See Description		
Description:	Writing 1 to this variable clears all faults. Once clear has been done, the variable will be cleared. If fault condition doesn't exist, fault clear will be successful and the drive will enter STOP state. If fault condition still exists, the drive will remain in fault state.		

3.2.7.13 FaultFlags

Index	135		
Size	Unsigned 16 bit		
Variable Type	Read only		
Range	Min: 0	Max:0xFFFF	Default: 0
Scaling or Notation:	Bit field definitions are mentioned in description		

Description:

This variable provides drive fault status. Most faults are handled by a fault handling routine operating at the PWM inverter switching frequency with the exception of Gate Kill faults. Gate Kill is handled within the Faults module and will instantly initiate inverter and regulator shutdown. The FaultFlags variable indicates currently pending fault conditions. The FaultClear variable is used to reset fault conditions.

For all bit fields defined below, a value of 1 indicates that the corresponding fault condition has occurred.

[0] Motor gatekill fault
[1] DC bus Critical overvoltage fault
[2] DC bus overvoltage fault
[3] DC bus under voltage fault
[4] Flux PLL out of control fault
[5] Reserved
[6] Over Temperature fault
[7] Rotor lock fault
[8] Phase Loss fault
[9] Reserved
[10] Execution fault (CPU load is more than 95%)
[11] Reserved
[12] Parameter load fault
[13] UART link break fault
[15:14] Reserved

Note: DC bus critical overvoltage and Gatekill fault cannot be masked by FaultEnable.

3.2.8 Start Control Register Group

3.2.8.1 BTS_Chargetime

Index	21		
Size	Unsigned 16 bit		
Parameter Type	DYNAMIC		
Range	Min: 0	Max:32767	Default: 150
Scaling or Notation:	1 = one PWM period		
Description:	User can change the value of this parameter to configure the boot strap capacitor charging time (default = 150 PWM period).		

3.2.8.2 TCatchSpin

Index	22		
Size	Unsigned 16 bit		
Parameter Type	DYNAMIC		
Range	Min: 0	Max:65535	Default:1000
Scaling or Notation:	1 = 0.001 Second		
Description:	This parameter specifies the catch spin synchronization time duration before engaging motor start acceleration. During this period, the internal controller tries to sync rotor position with zero torque current reference.		

3.2.8.3 DirectStartThr

Index	23		
Size	Unsigned 16 bit		
Parameter Type	DYNAMIC		
Range	Min: 0	Max:32767	Default:1000
Scaling or Notation:	16384 = Motor Max RPM		
Description:	At the end of catch spin state, this parameter is the absolute motor speed threshold that decides whether to go through Angle_Sensing + Parking + OpenLoop start or directly go to closed loop run state. If DirectStartThr=0, after catch spin, it will directly go to closed loop run state.		

3.2.8.4 ParkAngle

Index	25		
Size	Signed 16 bit		
Parameter Type	DYNAMIC		
Range	Min: -32768	Max:32767	Default:5461
Scaling or Notation:	-180°→+180° is represented as -32768 to +32767		
Description:	This parameter configures the current angle during parking state. Reset value of parking angle is set to 5461 (30°) which is the center of sector 0.		

3.2.8.5 ParkTime

Index	24		
Size	Unsigned 16 bit		
Parameter Type	DYNAMIC		
Range	Min: 0	Max:65535	Default:1000
Scaling or Notation:	1 = 0.001 Second		
Description:	This parameter configures total parking time. During parking state, parking current increases linearly from 0 to low speed current limit. If ParkTime=0, parking state will be skipped.		

3.2.8.6 OpenLoopRamp

Index	26		
Size	Unsigned 16 bit		
Parameter Type	DYNAMIC		
Range	Min: 0	Max:32767	Default:1000
Scaling or Notation:	See description.		
Description:	This parameter configures the open loop acceleration rate. During open loop state, motor current is regulated at low speed current limit; rotation speed accelerates linearly from 0 to MinSpd. Total duration of open loop: $T_{OpenLoop} = \frac{MinSpd*1024*10}{OpenLoopRamp}$, in 1 millisecond If OpenLoopRamp=0, open loop state will be skipped		

3.2.8.7 IS_Pulses

Index	27		
Size	Unsigned 16 bit		
Parameter Type	DYNAMIC		
Range	Min: 0	Max:1000	Default:14
Scaling or Notation:	1 = 1 sensing pulse under nominal DC bus voltage (DcBusVolts=2048)		
Description:	This parameter specifies the number of PWM cycles for each angle sensing pulse under nominal DC bus voltage. Actual number of PWM cycles is DC bus compensated in order to keep constant volt-second which in turns keep the same peak sensing current. Inductor sensing measures the current of last 2 PWM cycles, if the parameter is configured at 1, only one PWM cycle will actually carry current. So it is advised to configure this parameter ≥ 2. Write 0 to this parameter disable the angle sensing feature.		

3.2.8.8 IS_Duty

Index	28		
Size	Unsigned 16 bit		
Parameter Type	DYNAMIC		
Range	Min: 0	Max:8191	Default:4095
Scaling or Notation:	8192 = 100% PWM duty cycle		
Description:	This parameter specifies the PWM duty cycle during ANGLE_SENSING. For better current sensing quality, in single shunt current sensing, duty cycle of angle sensing should not be too low otherwise active vector will be too short to sense the current. In leg shunt current sensing, duty cycle should not be too high otherwise there will not be enough time to sense the current during zero vector.		

3.2.8.9 IS _IqInit

Index	29		
Size	Unsigned 16 bit		
Parameter Type	DYNAMIC		
Range	Min: 0	Max:8191	Default:14
Scaling or Notation:	4096 = 100% motor rated RMS current		
Description:	This parameter specifies the initial torque been applied after done ANGLE_SENSING stage and before entering MOTOR_RUN. Right after ANGLE_SENSING stage, the flux PLL has not locked to the rotor angle; it takes some time and also needs motor speed to be high enough. This means in the beginning of MOTOR_RUN state, flux PLL is not working properly and it relies on initial torque to accelerate the motor in order for the PLL to lock. To achieve reliable and smooth start, some tuning to flux estimator and flux PLL is required.		

3.2.9 Control Input Register Group

3.2.9.1 PGDeltaAngle

Index	53		
Size	Unsigned 16 bit		
Parameter Type	STATIC		
Range	Min: 0	Max: 65535	Default: 0
Scaling or Notation:	512 = 1 PG pulse every 360 electrical degree (every electrical cycle)		
Description:	This parameter configures the PG output. $PGDeltaAngle = 256 * \frac{Motor\ poles}{PPR}$ Write 0 to PGDeltaAngle will disable the PG output. PPR is expected PG Pulses Per Revolution. For example, 4 PPR for an 8 poles motor (1 pulse per electrical cycle), then: $PGDeltaAngle = 256 * \frac{8}{4} = 512$ PG output is updated every PWM cycle, so the maximum PG output frequency is ½ Fpwm. The maximum value for PGDeltaAngle is 16383, which means 1 PG pulse take 32 electrical cycle (16384/512=32), on an 8 poles motor, the PG output will be 0.125PPR. If PGDeltaAngle is 2^n (2,4,8,16….8192,16384), PG pulse will be synchronized with rotor angle. For example, if PGDeltaAngle=512 for an 8 poles motor (4PPR). There are 4 PG pulses every 4 electrical cycles and the PG transition (high to low or low to high) will happen at 0 and 180 electrical degree.		

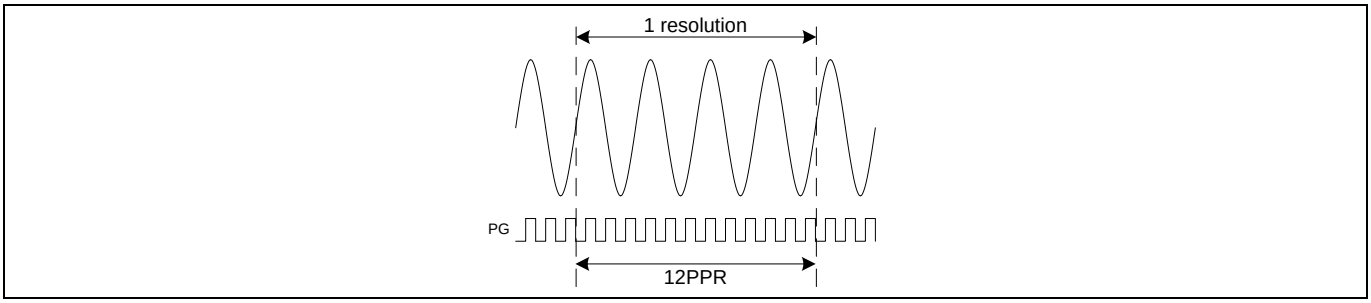

Figure 45 PG Output

3.2.9.2 CmdStart

Index	69		
Size	Unsigned 16 bit		
Parameter Type	STATIC		
Range	Min: 0	Max: 65535	Default: 0
Scaling or Notation:	See description.		
Description:	In Vsp/Frequency/Duty Cycle input mode, this parameter specifies the input threshold for motor start.		

3.2.9.3 CmdStop

Index	68		
Size	Unsigned 16 bit		
Parameter Type	STATIC		
Range	Min: 0	Max: 65535	Default: 0
Scaling or Notation:	See description.		
Description:	In Vsp/Frequency/Duty Cycle input mode, this parameter specifies the input threshold for motor stop.		

3.2.9.4 CmdGain

Index	70		
Size	Unsigned 16 bit		
Parameter Type	STATIC		
Range	Min: 0	Max: 65535	Default: 0
Scaling or Notation:	See description.		
Description:	In Vsp/Frequency/Duty Cycle input mode, this parameter specifies the slope between the input threshold for motor start and threshold for MaxRPM.		

3.2.10 Voltage Control Register Group

3.2.10.1 Vd_Ext

Index	130		
Size	Unsigned 16 bit		
Variable Type	Read Write		
Range	Min: 0	Max:4974	Default: 0
Scaling or Notation:	$\text{Output duty cycle} = \frac{\text{Vd_Ext} \times 2048}{4974 \times \text{DcBusVoltsFilt}} \times 100\%$		
Description:	Vd command when the drive is working in voltage control mode.		

3.2.10.2 Vq_Ext

Index	131		
Size	Unsigned 16 bit		
Variable Type	Read Write		
Range	Min: 0	Max:4974	Default: 0
Scaling or Notation:	$Output\ duty\ cycle = \frac{Vq_Ext \times 2048}{4974 \times DcBusVoltsFilt} \times 100\%$		
Description:	Vq command when the drive is working in voltage control mode.		

3.2.10.3 V_Alpha

Index	151		
Size	Signed 16 bit		
Variable Type	Read only		
Range	Min: -8191	Max:8191	Default: 0
Scaling or Notation:	8191 = 100%		
Description:	This variable provides Alpha motor phase voltage.		

3.2.10.4 V_Beta

Index	152		
Size	Signed 16 bit		
Variable Type	Read only		
Range	Min: -8191	Max:8191	Default: 0
Scaling or Notation:	8191 = 100%		
Description:	This variable provides Beta motor phase voltage.		

3.2.10.5 Vd

Index	156		
Size	Unsigned 16 bit		
Variable Type	Read only		
Range	Min: 0	Max:4974	Default: 0
Scaling or Notation:	4974 = 100%		
Description:	Motor Vd voltage component. This variable holds the value of Id PI output value in case of speed control or current control mode.		

3.2.10.6 Vq

Index	157		
Size	Unsigned 16 bit		
Variable Type	Read only		
Range	Min: 0	Max:4974	Default: 0
Scaling or Notation:	4974 = 100%		
Description:	Motor Vq voltage component. This variable holds the value of Iq PI output value in case of speed control or current control mode.		

3.2.10.7 MotorVoltage

Index	158		
Size	Unsigned 16 bit		
Variable Type	Read only		
Range	Min: 0	Max:4974	Default: 0
Scaling or Notation:	4974 = 100%		
Description:	This variable holds motor applied voltage. $Vdq = (\sqrt{Vd^2 + Vq^2})$		

3.2.11 Torque Compensation Register Group

3.2.11.1 TrqCompLim

Index	77		
Size	Unsigned 16 bit		
Parameter Type	DYNAMIC		
Range	Min: 0	Max:16383	Default:4095
Scaling or Notation:	4095 = 100% motor rated current		
Description:	This parameter specifies the maximum allowable torque compensation value		

3.2.11.2 TrqCompOnSpeed

Index	78		
Size	Unsigned 16 bit		
Variable Type	DYNAMIC		
Range	Min: 0	Max:32767	Default: 0
Scaling or Notation:	16383 = Motor Max RPM		
Description:	This parameter set torque compensation ON speed threshold value. Torque compensation is active if actual motor speed value is less than this parameter value.		

3.2.11.3 TrqCompOffSpeed

Index	79		
Size	Unsigned 16 bit		
Parameter Type	DYNAMIC		
Range	Min: 0	Max:32767	Default: 0
Scaling or Notation:	16383 = Motor Max RPM		
Description:	This parameter set torque compensation OFF speed threshold value. Torque compensation is disabled if actual motor speed value is greater than this parameter value.		

3.3 PFC Control Register (App ID =3)

Complete list of parameter and variables are listed in the Table 15 and Table 16 and find description in the following chapters.

Table 15 PFC Parameter list

App ID	Index	Parameter Name	Type	Description
3	1	PFC_HwConfig	STATIC	Application hardware configuration parameter
3	2	PFC_SysConfig	STATIC	System configuration parameter
3	3	PFC_PwmFreq	STATIC	PFC PWM frequency
3	4	PFC_TMinOff	DYNAMIC	Minimum PWM off time
3	5	PFC_Deadtime	STATIC	PWM dead time
3	6	PFC_SHDelay	DYNAMIC	Delay time from PWM output to ADC sample time
3	7	PFC_IRectLim	DYNAMIC	Rectifying current limit value
3	8	PFC_IGenLim	DYNAMIC	Generating current limit value
3	9	PFC_VdcRampRate	DYNAMIC	Voltage reference ramp up/down rate
3	10	PFC_KpVreg	DYNAMIC	Proportional gain of the voltage regulator
3	11	PFC_KxVreg	DYNAMIC	Integral gain of the voltage regulator
3	12	PFC_KpIreg	DYNAMIC	Proportional gain of the current regulator
3	13	PFC_KxIreg	DYNAMIC	Integral gain of the current regulator
3	15	PFC_TrackingCycle	DYNAMIC	Used for voltage reference in tracking mode
3	16	PFC_TrackingGain	DYNAMIC	Used for voltage reference in tracking mode
3	17	PFC_HalfCycleMin	DYNAMIC	AC voltage minimum limit for input frequency check
3	18	PFC_HalfCycleMax	DYNAMIC	AC voltage maximum limit for input frequency check
3	19	PFC_VacZCThr	DYNAMIC	AC voltage threshold to detect zero crossing
3	20	PFC_VacOvLevel	DYNAMIC	AC voltage input overvoltage trip level
3	21	PFC_VacUvLevel	DYNAMIC	AC voltage input under voltage trip level
3	22	PFC_VdcOvLevel	DYNAMIC	DC bus overvoltage trip level
3	23	PFC_VdcUvLevel	DYNAMIC	DC bus under voltage trip level
3	24	PFC_AcDcScale	DYNAMIC	Ratio of feedforward component added to the duty output
3	25	PFC_LFactor	DYNAMIC	Used for average current calculation
3	26	PFC_FaultEnable	DYNAMIC	Enable or disable fault condition handling. When a fault bit is not set, the fault condition is ignored
3	27	PFC_GateKillTime	STATIC	Persistence filter time for PWM gate kill input

Table 16 PFC Variable list

App ID	Index	Variable Name	Type	Description
3	81	PFC_SequencerState	READONLY	Current state
3	82	PFC_Command	READWRITE	Controls the system state - Stop/ start the PFC
3	85	PFC_FaultClear	READWRITE	Fault clear
3	87	PFC_SwFaults	READONLY	Fault status based on fault condition and fault mask
3	89	PFC_TargetVolt	READWRITE	Voltage set point value
3	90	PFC_VoltagePIoutput	READONLY	Voltage PI controller output value
3	92	PFC_VdcRaw	READONLY	DC bus voltage
3	93	PFC_IpfcRaw	READONLY	PFC Current
3	94	PFC_AbsVacRaw	READONLY	AC voltage absolute value
3	98	PFC_VacRMS	READONLY	AC voltage RMS value
3	99	PFC_VdcFilt	READONLY	DC bus filtered voltage
3	103	PFC_VacRaw	READONLY	AC voltage value
3	104	PFC_Fault Flag	READONLY	Fault status based on fault condition
3	105	PFC_IpfcAvg	READONLY	PFC current average value
3	106	PFC_IpfcRMS	READONLY	PFC current RMS value
3	107	PFC_ACPower	READONLY	PFC input power
3	110	PFC_CurrentPIoutput	READONLY	Current control PI output

3.3.1 Control Register Group

3.3.1.1 PFC_HwConfig

Index	1		
Size	Unsigned 16 bit		
Parameter Type	STATIC		
Range	Min: 0	Max: 0xFFFF	Default: 0

Scaling or Notation: Bit field definitions are mentioned in description

Description: PFC application hardware configuration parameter

[0] PFC Topology
- 0- Boost Mode PFC
- 1- Totem Pole PFC

[4:1] Reserved

[5] Active polarity for Low side PWM output
- 0- Active level is low
- 1- Active level is high

[6] Active polarity for High side PWM output
- 0- Active level is low
- 1- Active level is high

[8:7] Internal gain for current measurement
- 0- Internal gain is 1
- 1- Internal gain is 3
- 2- Internal gain is 6
- 3- Internal gain is 12

[9] Current sensing polarity
- 0- Non-Inverting
- 1- Inverting

[10] AC Voltage Sensing
- 0- Single ended sensing (external op-amp required)
- 1- Differential sensing (no op-amp, use two ADC channels)

[15:11] Reserved

3.3.1.2 PFC_SysConfig

Index	2		
Size	Unsigned 16 bit		
Parameter Type	STATIC		
Range	Min: 0	Max: 0xFFFF	Default: 0
Scaling or Notation:	Bit field definitions are mentioned in description		
Description:	PFC system configuration parameter [3:0] Execution rate for current control loop. 1- Current control loop executed every PWM period 2- Current control loop executed every 2 PWM period … 15 - Current control loop executed every 15 PWM period [4] Control mode selection 0- Voltage Control Mode 1- Tracking Control Mode [15:5] Reserved		

3.3.1.3 PFC_ SequencerState

Index	81		
Size	Unsigned 16 bit		
Variable Type	Read Only		
Range	Min: 0	Max: 5	Default: 0
Scaling or Notation:	See description		
Description:	This variable contains the current sequence state of the drive 0- Power on state 1- Stop state 2- Measuring offset current 4- PFC running 5- Fault state		

3.3.1.4 PFC_Command

Index	82		
Size	Unsigned 16 bit		
Variable Type	Read Write		
Range	Min: 0	Max: 1	Default: 0
Scaling or Notation:	See description		
Description:	This variable controls the system state with the following values: 0- Stop the PFC 1- Start the PFC		

3.3.2 PWM Register Group

3.3.2.1 PFC_PwmFreq

Index	3		
Size	Unsigned 16 bit		
Parameter Type	STATIC		
Range	Min: 0	Max:1000	Default:6000
Scaling or Notation:	1 = 0.1 kHz F_{PWM} ; 1600 = 16kHz F_{PWM}		
Description:	This parameter configures the PWM frequency in 0.1 kHz increment.		

3.3.2.2 PFC_TMinOff

Index	4		
Size	Unsigned 16 bit		
Parameter Type	DYNAMIC		
Range	Min: 0	Max:PWMPeriod	Default: 0
Scaling or Notation:	$1 = 10.4167ns$		
Description	This parameter configures minimum PWM off time. Where : PWMPeriod is 96,000,000/(2*PWMFreq[Hz])		

3.3.2.3 PFC_Deadtime

Index	5		
Size	Unsigned 16 bit		
Parameter Type	STATIC		
Range	Min: 0	Max: 255	Default: 0
Scaling or Notation:	$1 = 10.4167ns$		
Description	This parameter configures PWM dead time value. This parameter is reserved for future use and should be always written 0.		

3.3.2.4 PFC_SHDelay

Index	6		
Size	Unsigned 16 bit		
Parameter Type	DYNAMIC		
Range	Min: 0	Max:960	Default: 0
Scaling or Notation:	$1 = 10.4167ns$		
Description:	SHDelay specifies the time delay from PWM output to ADC sample time for current sensing. The delay time is depending on the hardware design; usually it should consider propagation delay of gate driver circuit and turn on (turn off) delay of switching devices.		

3.3.3 Voltage Control Register Group

3.3.3.1 PFC_IRectLim

Index	7		
Size	Unsigned 16 bit		
Parameter Type	DYNAMIC		
Range	Min: 0	Max:4095	Default: 0
Scaling or Notation:	4095 = 100% maximum measureable current		
Description:	This parameter specifies the maximum voltage PI positive output value which means allowable PFC rectifying current. Rectifying current is the energy direction from AC to DC. This limit should be set higher than maximum possible PFC current considering load condition, lowest AC voltage as well as some margin. The goal is never entering current limit unless there is hardware issue.		

3.3.3.2 PFC_IGenLim

Index	8		
Size	Unsigned 16 bit		
Parameter Type	DYNAMIC		
Range	Min: 0	Max:4095	Default: 0
Scaling or Notation:	4095 = 100% maximum measureable current		
Description:	This parameter specifies the maximum voltage PI negative output value which means allowable PFC generating current. Generating current is the energy direction from DC to AC. This parameter is reserved for future PFC release and not actually working in current PFC release. Set this parameter to 0, or set to a small value (<100).		

3.3.3.3 PFC_VdcRampRate

Index	9		
Size	Unsigned 16 bit		
Parameter Type	DYNAMIC		
Range	Min: 0	Max:65535	Default: 0
Scaling or Notation:	See description		
Description:	This parameter specifies the ramp rate of voltage reference. $VdcRampRate = \frac{PFC_VdcRampRate * 0.001 * VadcRef}{4095 * VdcVoltageDividerRatio * 2^{16}}$ $, in\ V/s$ Where: $VdcVoltageDividerRatio = \frac{Vdc\ Sensing\ Low\ Resister}{Vdc\ Sensing\ Low\ Resister + Vdc\ Sensing\ High\ Resister}$		

3.3.3.4 PFC_KpVreg

Index	10		
Size	Unsigned 16 bit		
Parameter Type	DYNAMIC		
Range	Min: 0	Max:65535	Default: 0
Scaling or Notation:	U4.12		
Description:	This parameter specifies the proportional gain of the voltage regulator		

3.3.3.5 PFC_KxVreg

Index	11		
Size	Unsigned 16 bit		
Parameter Type	DYNAMIC		
Range	Min: 0	Max:65535	Default: 0
Scaling or Notation:	U4.12		
Description:	This parameter specifies the integral gain of the voltage regulator		

3.3.3.6 PFC_TargetVolt

Index	89		
Size	Signed 16 bit		
Variable Type	Read Write		
Range	Min: 0	Max:4095	Default: 0
Scaling or Notation:	4095 = Maximum measureable voltage		
Description:	This is the reference input of voltage regulator. In tracking mode, this variable has no influence.		

$$TargetVolt = \frac{PFC_TargetVolt * VacRef * (Vdc\ Sensing\ High\ Resister + Vdc\ Sensing\ Low\ Resister)}{Vdc\ Sensing\ Low\ Resister * 4095}, V$$

3.3.3.7 PFC_VoltagePIoutput

Index	90		
Size	Unsigned 16 bit		
Variable Type	Read Only		
Range	Min: 0	Max:4095	Default: 0
Scaling or Notation:	4095 = 100% maximum measureable current		
Description:	Voltage regulator output value		

3.3.4 Current Control Register Group

3.3.4.1 PFC_KpIreg

Index	12		
Size	Unsigned 16 bit		
Parameter Type	DYNAMIC		
Range	Min: 0	Max:65535	Default: 0
Scaling or Notation:	U4.12		
Description:	This parameter specifies the proportional gain of the current regulator. Higher proportional gain improves PFC current waveform, but it may crease current oscillation if its value is too high, and/or AC voltage and PFC current sensing in PFC hardware has high noise.		

3.3.4.2 PFC_KxIreg

Index	13		
Size	Unsigned 16 bit		
Parameter Type	DYNAMIC		
Range	Min: 0	Max:65535	Default: 0
Scaling or Notation:	U4.12		
Description:	This parameter specifies the integral gain of the current regulator		

3.3.4.3 PFC_AcDcScale

Index	24		
Size	Unsigned 16 bit		
Parameter Type	DYNAMIC		
Range	Min: 0	Max:65535	Default: 0
Scaling or Notation:	See description		
Description:	This parameter defines the ratio of feedforward component added to the duty output and scaling between AC and DC voltage measurement. $PFC_{AcDCScale} = \text{AcDcScaleAdjustent} * \frac{(\text{Vac Sensing High Resister} + \text{Vac Sensing Low Resister}) * \text{Vdc Sensing Low Resister} * 2048}{\text{Vac Sensing Low Resister} * (\text{Vdc Sensing High Resister} + \text{Vdc Sensing Low Resister})}$ If high resistor and low resistor are the same value for AC voltage sensing and DC voltage sensing, PFC_AcDcScale=2048 represents 100% feedforward ratio. The ratio should be adjusted accordingly to achieve best PFC current waveform.		

3.3.4.4 PFC_LFactor

Index	25		
Size	Unsigned 16 bit		
Parameter Type	DYNAMIC		
Range	Min: 0	Max:65535	Default: 0
Scaling or Notation:	See description		
Description:	This parameter is used to calculate the average current as current measurement is done at every peak current period. Average current calculation helps improve the PFC current waveform. Although the MCEWizard create the value for this parameter, due to many factors which affect the actual result, it may still need to be fine-tuned to achieve best PFC current waveform.		

3.3.4.5 PFC_CurrentPIoutput

Index	110		
Size	Unsigned 16 bit		
Variable Type	Read Only		
Range	Min: 0	Max:PWM Period	Default: 0
Scaling or Notation:	PWMPeriod= 100% duty cycle		
Description:	Sum of output from current regulator and feed forward output values Where : PWMPeriod is 96,000,000/(2*PWMFreq[Hz])		

3.3.5 Protection Register Group

3.3.5.1 PFC_GateKillTime

Index	19		
Size	Unsigned 16 bit		
Parameter Type	STATIC		
Range	Min: 0	Max:960	Default:48
Scaling or Notation:	$1 = 10.4167ns$		
Description:	Persistence filter time for PWM gate kill input (in clock cycles)		

3.3.5.2 PFC_VacOvLevel

Index	20		
Size	Unsigned 16 bit		
Parameter Type	DYNAMIC		
Range	Min: 0	Max:4095	Default: 0
Scaling or Notation:	In ADC counts.		
Description:	This parameter defines the AC over voltage trip level. AC over voltage fault will be generated if AC input voltage exceeds this threshold.		

3.3.5.3 PFC_VacLvLevel

Index	21		
Size	Unsigned 16 bit		
Parameter Type	DYNAMIC		
Range	Min: 0	Max:4095	Default: 0
Scaling or Notation:	In ADC counts.		
Description:	This parameter defines the AC under voltage trip level. AC bus under trip voltage fault will be generated if AC input voltage falls below this threshold.		

3.3.5.4 PFC_VdcOvLevel

Index	22		
Size	Unsigned 16 bit		
Parameter Type	DYNAMIC		
Range	Min: 0	Max:4095	Default: 0
Scaling or Notation:	In ADC counts.		
Description:	This parameter defines the dc bus over voltage trip level. A dc bus over voltage fault will be generated if dc bus voltage exceeds this threshold.		

3.3.5.5 PFC_VdcLvLevel

Index	23		
Size	Unsigned 16 bit		
Parameter Type	DYNAMIC		
Range	Min: 0	Max:4095	Default: 0
Scaling or Notation:	In ADC counts.		
Description:	This parameter defines the dc bus under voltage trip level. A dc bus under trip voltage fault will be generated if dc bus voltage falls below this threshold.		

3.3.5.6 PFC_FaultEnable

Index	26		
Size	Unsigned 16 bit		
Parameter Type	DYNAMIC		
Range	Min: 0	Max:0xFFFF	Default: 0
Scaling or Notation:	Bit field definitions are mentioned in description. For each bit, 0 – Ignore the associated fault; 1 – enable processing of the associated fault.		
Description:	This parameter specifies enable/disable of faults are mentioned below [0] Reserved, must be set to "0" [1] Enable DC bus under voltage fault [2] Enable DC bus over voltage fault [3] Reserved, must be set to "0" [4] Enable AC under voltage fault [5] Enable AC over voltage fault [15:6] Reserved, must be set to "0" When a fault is disabled (bit set to "0"), the fault condition is ignored and the motor keeps running. However, even when a fault is disabled, its occurrence is reported in the FaultFlags variable, until the condition that caused the fault disappears.		

3.3.5.7 PFC_FaultClear

Index	85		
Size	Unsigned 16 bit		
Variable Type	Read Write		
Range	Min: 0	Max:1	Default: 0
Scaling or Notation:	See Description		
Description:	Writing 1 to this variable clears all faults. Once clear has been done, the variable will be cleared. If fault condition doesn't exist, fault clear will be successful and the drive will enter STOP state. If fault condition still exists, the drive will remain in fault state.		

3.3.5.8 PFC_SwFaults

Index	87		
Size	Unsigned 16 bit		
Variable Type	Read only		
Range	Min: 0	Max:255	Default: 0
Scaling or Notation:	See description.		
Description:	This variable is derived from FaultFlags by the following bitwise logical operation: $PFC_SwFaults = PFC_FaultFlags \cdot PFC_FaultEnable$ SwFaults is cleared by PFC_FaultClear. For bit field definition, refer to PFC_Faultflags.		

3.3.5.9 PFC_FaultFlags

Index	104		
Size	Unsigned 16 bit		
Variable Type	Read only		
Range	Min: 0	Max:0xFFFF	Default: 0
Scaling or Notation:	Bit field definitions are mentioned in description		
Description:	This variable provides drive fault status. Most faults are handled by a fault handling routine operating at the PWM inverter switching frequency with the exception of Gate Kill faults. Gate Kill is handled within the Faults module and will instantly initiate inverter and regulator shutdown. The FaultFlags variable indicates currently pending fault conditions. The FaultClear variable is used to reset fault conditions. For all bit fields defined below, a value of 1 indicates that the corresponding fault condition has occured. [0] PFC gate kill fault [1] DC bus under voltage fault [2] DC bus over voltage fault [3] Vac frequency fault [4] Vac under voltage fault [5] Vac overvoltage fault [11:6] Reserved [12] Parameter load fault [15:13] Reserved Gate kill fault and Vac Frequency fault cannot be masked by PFC_FaultEnable		

3.3.6 Measurement Register Group

3.3.6.1 PFC_VdcRaw

Index	92		
Size	Unsigned 16 bit		
Variable Type	Read only		
Range	Min: 0	Max:4095	Default: 0
Scaling or Notation:	In ADC counts		
Description:	This variable provides the measured DC bus voltage value. This value is updated every PWM cycle.		

3.3.6.2 PFC_VdcFilt

Index	99		
Size	Unsigned 16 bit		
Variable Type	Read only		
Range	Min: 0	Max:4095	Default: 0
Scaling or Notation:	In ADC counts		
Description:	This variable provides the filtered DC bus voltage value.		

3.3.6.3 PFC_IpfcRaw

Index	93		
Size	Unsigned 16 bit		
Variable Type	Read only		
Range	Min: 0	Max:4095	Default: 0
Scaling or Notation:	In ADC counts		
Description:	This variable provides the Ipfc current raw value.		

3.3.6.4 PFC_IpfcAvg

Index	105		
Size	Unsigned 16 bit		
Variable Type	Read only		
Range	Min: 0	Max:4095	Default: 0
Scaling or Notation:	In ADC counts		
Description:	This variable provides the Ipfc average current value.		

3.3.6.5 PFC_IpfcRMS

Index	106		
Size	Unsigned 16 bit		
Variable Type	Read only		
Range	Min: 0	Max:4095	Default: 0
Scaling or Notation:	In ADC counts		
Description:	This variable provides the Ipfc current RMS value.		

3.3.6.6 PFC_VacRaw

Index	103		
Size	Unsigned 16 bit		
Variable Type	Read only		
Range	Min: 0	Max:4095	Default: 0
Scaling or Notation:	In ADC counts		
Description:	This variable provides the Vac raw voltage value.		

3.3.6.7 PFC_AbsVacRaw

Index	94		
Size	Unsigned 16 bit		
Variable Type	Read only		
Range	Min: 0	Max:4095	Default: 0
Scaling or Notation:	In ADC counts		
Description:	This variable provides the Vac absolute voltage value.		

3.3.6.8 PFC_VacRMS

Index	98		
Size	Unsigned 16 bit		
Variable Type	Read only		
Range	Min: 0	Max:4095	Default: 0
Scaling or Notation:	In ADC counts		
Description:	This variable provides the Vac RPMS voltage value.		

3.3.6.9 PFC_ACPower

Index	107		
Size	Unsigned 16 bit		
Variable Type	Read only		
Range	Min: 0	Max:65535	Default: 0
Scaling or Notation:	In ADC counts		
Description:	This variable provides the AC input power value.		

4 Motor Tuning

MCEWizard calculates hardware parameters, motor parameters, control parameters/features, protection parameters/features as well as features for the complete system based on configuration input. This is the first step that users need to do before running a motor.

Correct motor parameter is important for sensorless FOC to be able to run the motor in steady state. MCE uses improved flux based sensorless algorithm which makes it much easier to start a motor. Although the motor can start, depends on application requirement, motor startup and dynamic performance may still need to be tuned in real load condition.

Below are some common problems and basic tuning technics when using the software:

4.1 How to check if the current sensing is good

It's better to run the motor without load, start the motor and set to a speed that motor can run smoothly. Use oscilloscope to measure motor RMS current. In MCEDesigner, output current display usually is slightly higher than measured motor current due to sensing noise, the difference should be small and close to measured motor current as much as possible.

If current sensing noise is not good, here list the possible causes:

- Bad PCB layout
- Power devices switch too fast which cause too much noise
- Current sensing parameters don't match the hardware, related parameters:
    1. Deadtime
    2. PwmGuandBand (leg shunt only)
    3. TCntMin (single shunt only)
    4. SHDelay
    5. TMinPhaseShift (single shunt only)

In single shunt configuration, phase shift PWM provides better control performance. TMinPhaseShift and SHDelay are two key parameters to achieve good single shunt current sensing in phase shift PWM mode

To achieve good single shunt current sensing signal, TMinPhaseShift and SHDelay should be configured following below guideline:

$$TMinPhaseShift > Dead\ time + Ringing$$

$$SHDelay < Hardware\ delay\ time$$

$$TMinPhaseShift + SHDelay > Hardware\ delay\ time + Dead\ time + Ringing$$

Please note that TMinPhaseShift may cause acoustic noise so that it should be set to a value as small as possible.

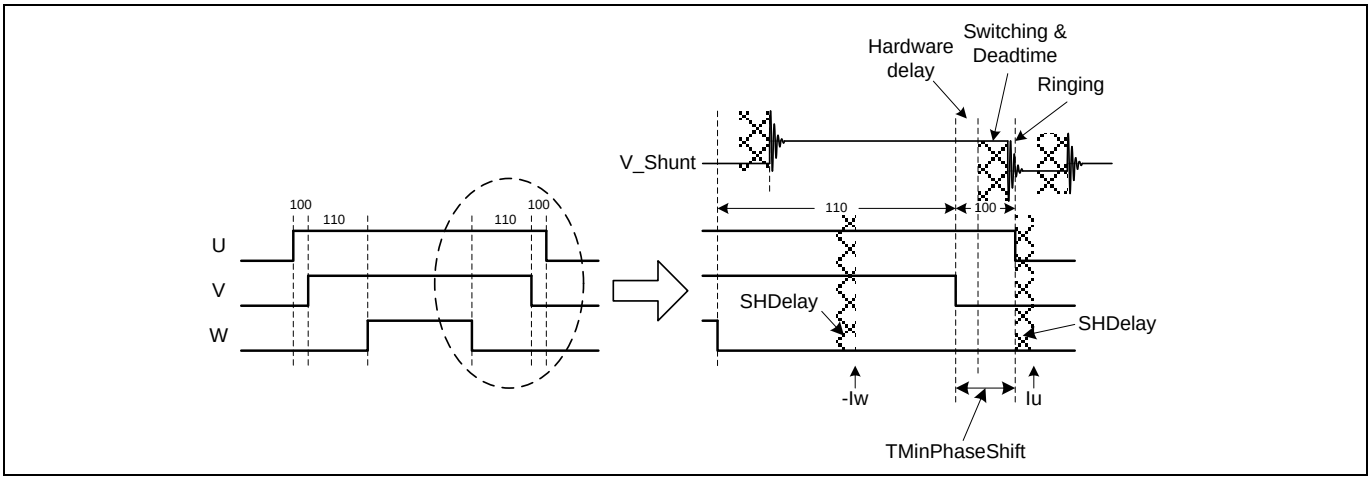

Figure 46 Single Shunt Current Sensing for Phase Shift PWM

There are three timings: Dead time, hardware delay time and ringing time. Dead time is already known since we set it in MCEWizard. What we need to measure on the hardware board is hardware delay time and ringing time.

Example of setting proper TMinPhaseShift and SHDelay:

Below is an example showing how to measure the hardware and fine tune these two parameters.

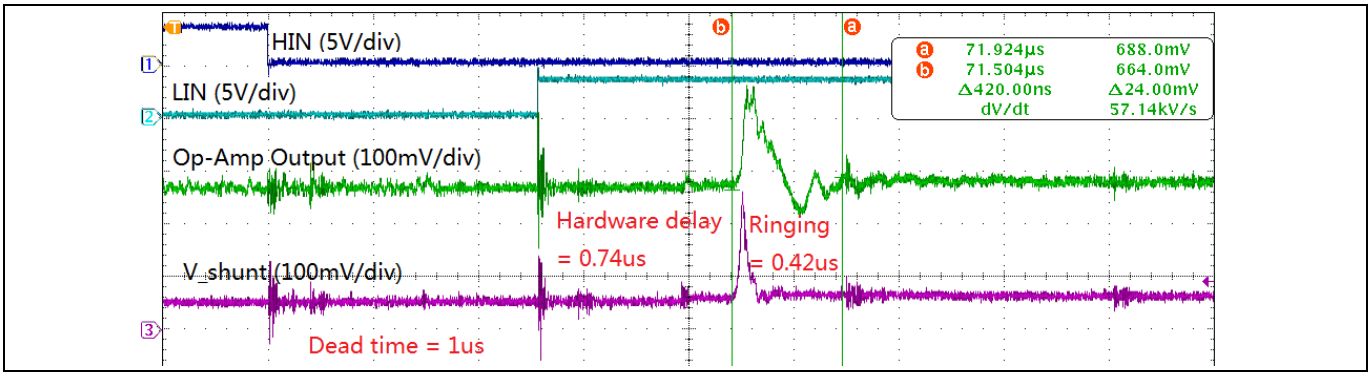

Figure 47 Measuring hardware delay and ringing time

$$TMinPhaseShift > 1us + 0.42us = 1.42us$$

$$SHDelay < 0.74us$$

$$TMinPhaseShift + SHDelay > 0.74us + 1us + 0.42us = 2.16us$$

We can easily configure TMinPhaseShift=2.2us and SHDelay=0 to meet above criteria. But the optimum value should with minimum TMinPhaseShift value to minimize acoustic noise cause by phase shift PWM. The optimum value should be:

$$TMinPhaseShift = 1.6us$$

$$SHDelay = 0.6us$$

4.2 Current regulator tuning

The MCE current controller utilizes field-oriented, synchronously rotating reference frame type regulators. Field-orientation provides significant simplification to the control dynamics of the current loop. There are two current regulators (one for the d-channel and one for the q-channel) employed for current regulation. The q-channel (torque) control structure is identical to the d-channel (flux). The current control dynamics of the d-channel is depicted in Figure 48. The motor windings can be represented by a first order lag with a time constant = L/R. This time constant is a function of the motor inductance and equivalent resistance (R = cable + winding). For a surface

mounted permanent magnet motor, the d and q channel inductances are almost equal. In the case of an interior permanent magnet (IPM) motor, the q-channel inductance is normally higher than the d-channel inductance.

In the current control continuous time domain model Figure 48, the forward gain A models the conversion of the digital controller output to voltage (including inverter gain) and the feedback gain B models the transformation of the current feedback (Amps) to internal digital counts via an A/D converter. The calculation of the PI compensator gains (KI_{Ireg}, Kp_{Ireg_D}) is done by using a pole-zero cancellation technique as illustrated in Figure 48, where the current controller is rearranged to give transfer function block C(s). Setting Kp_{Ireg_D} / KI_{Ireg} of C(s) equal to the time constant of the motor ($\tau = L/R$), the controller zero will cancel the motor pole (pole-zero cancellation). Therefore, the model of the controller dynamics can be further simplified as shown in Figure 50. The equivalent transfer function of Figure 50 is a first order lag with time constant τ_c. By selecting an appropriate current regulator response (typically 1 to 5 msec) for a particular application, the current regulator gains can be readily obtained. It may be noticed that using the pole zero cancellation technique, the motor inductance enters into proportional gain calculations and the resistance enters into integral gain calculations.

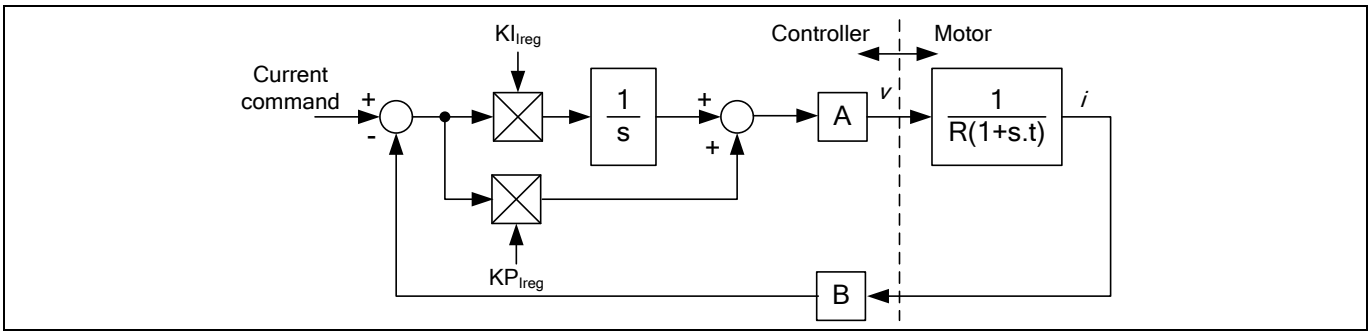

Figure 48 Current controller dynamics

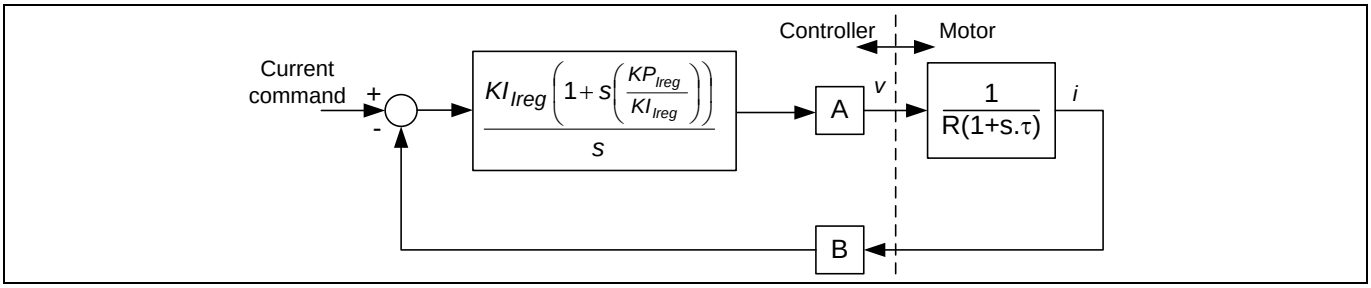

Figure 49 Pole zero cancellation

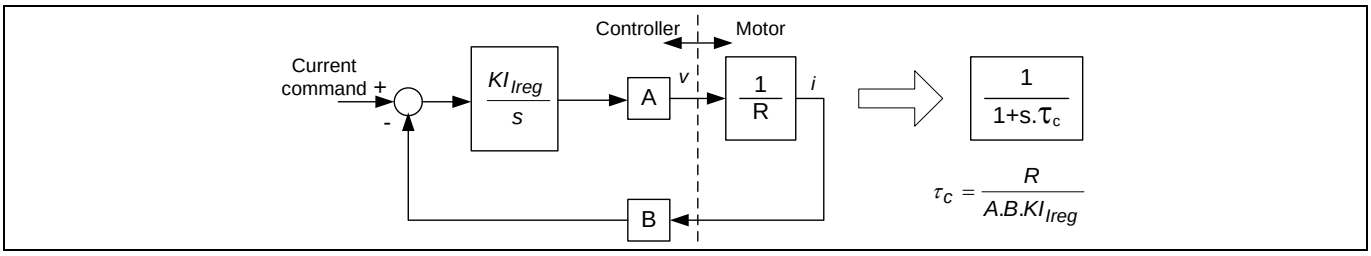

Figure 50 Simplified current control dynamics due to pole zero cancellation

Based on the pole-zero cancellation technique the controller gains in the continuous time domain model are evaluated by:

$$Kp_{Ireg} = \frac{L_q \cdot CurrentRegBW}{A \cdot B}$$

$$KI_{Ireg} = \frac{R \cdot CurrentRegBW}{A \cdot B}$$

Where A and B are the voltage and current scaling.

In the digital controller implementation, the integrator is a digital accumulator and so the discrete time domain model for the PI compensator must be used for the integrator. In this case the digital integrator gain, Kx_{Ireg}, includes a scaling factor for the compensator sampling time.

$$Kx_{Ireg} = KI_{Ireg} \cdot T$$

T is the controller sampling time, which in this case is equal to the PWM period.

The voltage scaling, A, must account for gains in the forward rotation and the space vector modulator. The three phase inverter produces a peak line voltage equal to the dc bus voltage V_{dc}, so at 100% modulation the rms phase voltage is $V_{dc}/\sqrt{2}/\sqrt{3}$. The modulator produces 100% modulation for a digital input of 8192 while the forward rotation function has a gain of 1.64676. Therefore, the current loop voltage scaling A is given by this equation:

$$A = \frac{V_{dc}/\sqrt{6}}{8192/1.64676} \ (in\ V_{rms}/cts)$$

The current loop feedback scaling, B, is defined by the shunt resistor, the amplifier gain, the A/D converter gain and the current feedback scaling parameter, IfbkScl. However, MCEWizard calculates IfbkScl so that a count of 4096 is equivalent to the motor rated rms current. Therefore, the current loop feedback scaling is simply given by:

$$B = \frac{4096}{I_{RATED}} \ (in\ cts/A_{rms})$$

The controller gains calculated for the current loop typically yield numbers that are less than one and so the current loop PI regulators include post multiplication scaling on the Kp and Kx inputs to increase the precision of the regulator gains. The multiplier on the Kp input is followed by a shift of 14 bits while the regulator on the Kx input is shifted by 19 bits. Therefore, the control gains calculated for this digital implementation are given by:

$$Kp_{Ireg} = \frac{L_q \cdot CurrentRegBW \cdot 2^{14}}{A \cdot B}$$

$$Kx_{Ireg} = \frac{R \cdot CurrentRegBW \cdot T \cdot 2^{19}}{A \cdot B}$$

Current regulator step response can be measured by using current control mode. Follow below steps to put the control into current control mode for current regulator step response diagnostic:

Step 1 – park the rotor to 0°:

a. Connect the motor and measure U phase current from oscilloscope.
b. AngleSelect = 0, disconnect flux rotor angle and use internal open loop angle.
c. CtrlModeSelect = 1, this is set to current control mode and disable the speed regulator.
d. TargetSpeed = 0, set open loop angle rotating speed to 0, thus angle will remain 0 during the test.
e. IdRef = 1024, apply 25% rated current to D axis.
f. Command = 1, start the drive, the control will regulate the current at 0° and the rotor will be aligned at 0°. The current is flowing out from U phase and flow into V and W phase.

We want to measure the step response without rotor movement. Step 1 is to park the rotor to certain angle so that the following steps will not cause any rotor movement. If the load inertia is high (such as fan blade), rotor will oscillate around parking angle and it may take long time to stop oscillating. If possible, use hand to stop oscillation and help it park at 0°.

Step 2 – apply initial 10% Id current:

a. IdRef = 410, apply 10% rated current to D axis.

Step 3 – apply 50% Id current:

a. IdRef = 2048, step change Id reference to 50%.

This is the step response we want to observe. Capture the U phase current waveform by using oscilloscope.

Step 4 – Stop the drive and recover the control to sensorless speed control mode:

a. Command = 0, stop the drive.
b. AngleSelect = 2, use flux rotor angle.
c. CtrlModeSelect = 2, set to speed mode.

Figure 51 shows measured step response with different current regulator bandwidth settings. Step response time constant is defined as the time duration from current start to rise until it reaches 63.2% $(1 - 1/e)$ of final current (not including over shooting).

At lower current regulator bandwidth, actual step response time constant is quite close to theoretical value (9.88ms vs 10ms, 4.84ms vs 5ms, 2.4ms vs 2.5ms). At high current regulator bandwidth, actual time constant becomes much smaller than theoretical value (1.02ms vs 1.25ms, 0.428ms vs 0.625ms) and over-shoot start to appear. To achieve better step response performance, it is recommended to reduce Kx_{Ireg} for high current regulator bandwidth.

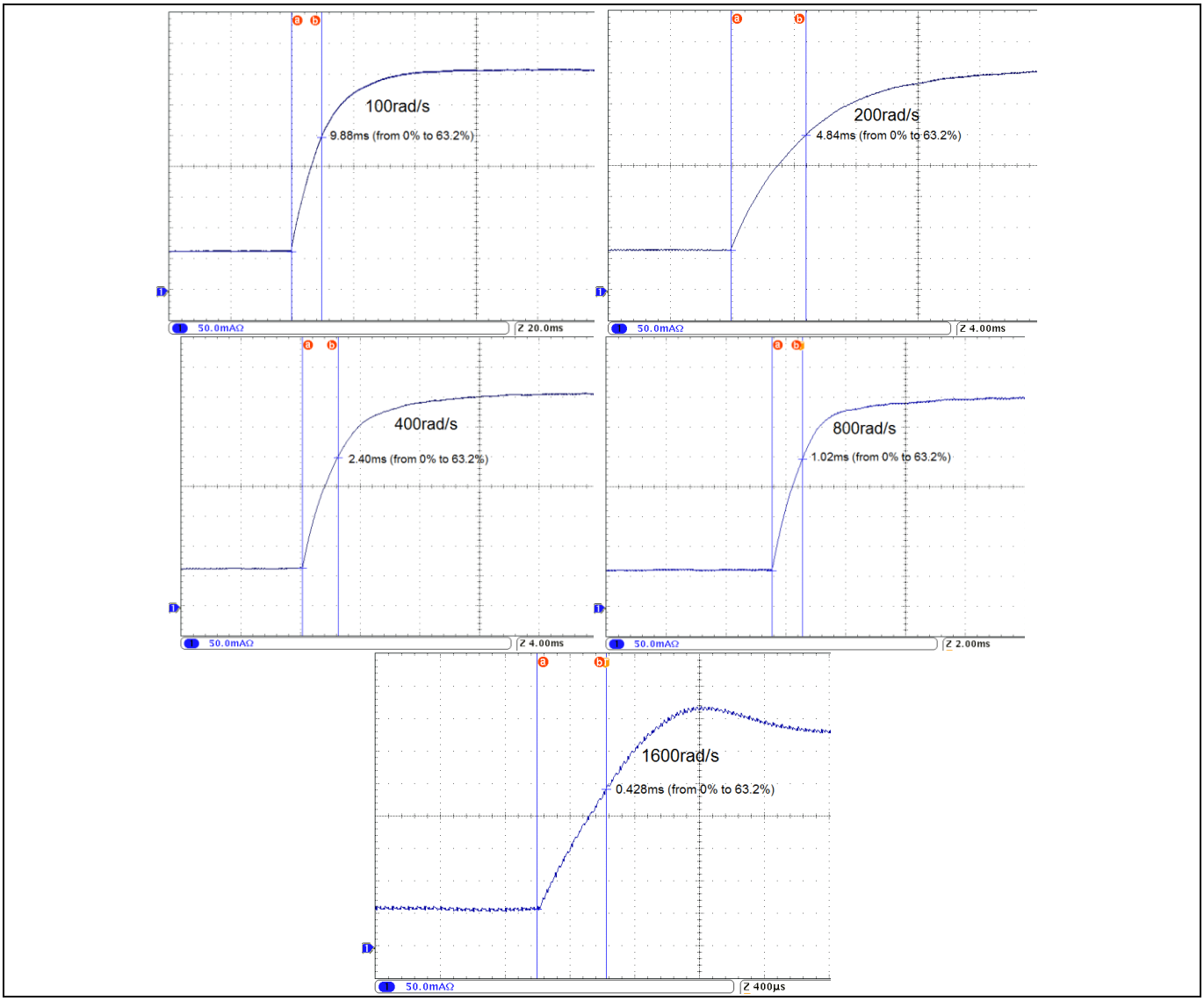

Figure 51 Current regulator step response (100/200/400/800/1600rad/s)

4.3 Difficult to start the motor

- Make sure current sensing is good
- Make sure motor parameter is correct
- Adjust speed regulator PI gain and speed feedback filter time constant
- Adjust minimum speed
- Adjust speed accelerate and decelerate ramp
- Adjust flux estimator time constant
- Increase motor current limit

4.4 Motor speed not stable

- If speed is not stable at low speed, check if current sensing is good
- If motor speed oscillate, reduce speed regulator PI, especially I gain
- If motor speed change too much when load change, increase speed PI gain, especially P gain
- If two phase modulation is enabled, make sure 3ph to 2ph switch over speed is high enough, or temporarily disable 2 phase PWM

4.5 Motor current not stable in field weakening

- Adjust FwkKx together with speed regulator PI gain
- Adjust current regulator PI gain. In field weakening mode, make D axis current regulator higher bandwidth than Q axis, try increase KpIregD 2x higher or more than KpIreg.

4.6 Reducing acoustic noise

There are many reasons cause acoustic noise. Here are the most common reasons:

- Noise from current sensing circuit. Try to improve current sensing circuit, such as optimizing PCB layout, adjust op-amp load capacitor and feedback capacitor value, optimizing current sensing parameters, etc.
- Noise from high current regulator bandwidth, there is always noise from current sensing; improper current regulator may amplify the noise. To reduce noise from current regulator, try reduce current regulator PI gain, while doing this, make sure the control performance (especially at startup and high load) still good enough
- Noise from low PWM frequency or two phase PWM. Try increase PWM frequency. If the hardware is not suitable for higher PWM frequency, turn off two phase PWM and use 3-phase PWM only.
- Noise from minimum pulse scheme or phase shift PWM scheme (single shunt configuration). Noise caused by minimum pulse scheme can be reduced by reducing parameter value of TCntMin. Noise caused by phase shift PWM scheme can be reduced by reducing parameter value of TMinPhaseShift. Please note in either case, SHDelay value also needs to be adjusted. It's not possible to eliminate noise in single shunt, if the application requires very low acoustic noise; change to leg shunt may solve the problem.
- Noise from over-modulation. When the motor is running at high speed, over-modulation can be used to maximize DC bus utilization. The drawback of over-modulation is that the output voltage is not sinusoidal; it contains high order harmonics which causes acoustic noise. If in this case, disable over-modulation.

5 Revision history

Document version	Date of release	Description of changes
1.0	2018-02-09	Release version- Functional and register description on sensorless FOC and PFC

Trademarks
All referenced product or service names and trademarks are the property of their respective owners.

Edition 2018-02-09
Published by
Infineon Technologies AG
81726 Munich, Germany

© 2018 Infineon Technologies AG.
All Rights Reserved.

Do you have a question about this document?
Email: erratum@infineon.com

Document reference
ifx1

IMPORTANT NOTICE
The information given in this document shall in no event be regarded as a guarantee of conditions or characteristics ("Beschaffenheitsgarantie") .

With respect to any examples, hints or any typical values stated herein and/or any information regarding the application of the product, Infineon Technologies hereby disclaims any and all warranties and liabilities of any kind, including without limitation warranties of non-infringement of intellectual property rights of any third party.

In addition, any information given in this document is subject to customer's compliance with its obligations stated in this document and any applicable legal requirements, norms and standards concerning customer's products and any use of the product of Infineon Technologies in customer's applications.

The data contained in this document is exclusively intended for technically trained staff. It is the responsibility of customer's technical departments to evaluate the suitability of the product for the intended application and the completeness of the product information given in this document with respect to such application.

For further information on the product, technology, delivery terms and conditions and prices please contact your nearest Infineon Technologies office (**www.infineon.com**).

WARNINGS
Due to technical requirements products may contain dangerous substances. For information on the types in question please contact your nearest Infineon Technologies office.

Except as otherwise explicitly approved by Infineon Technologies in a written document signed by authorized representatives of Infineon Technologies, Infineon Technologies' products may not be used in any applications where a failure of the product or any consequences of the use thereof can reasonably be expected to result in personal injury.