EVAL-M1-CTF610N3 User Manual

iMOTION™ Modular Application Design Kit

About this document

Scope and purpose

This user manual provides an overview of the evaluation board EVAL-M1-CTF610N3 including its main features, key data, pin assignments and mechanical dimensions.

EVAL-M1-CTF610N3 is an evaluation board as part of the iMOTION™ Modular Application Design Kit. This power board including a 3-phase CIPOS™ Tiny Intelligent Power Module (IPM) for motor drive application. In combination with the control board equipped with the M1 20pin interface connector such as EVAL-M1-101T, it features and demonstrates Infineon's CIPOS™ Tiny IPM technology and Advanced Motion Control Engine (MCE 2.0) technology for permanent magnet motors drive over the full speed range.

This evaluation board EVAL-M1-CTF610N3 was developed to support customers during their first steps designing applications with CIPOS™ Tiny IPM and running any permanent magnet motor via sensorless sinusoidal control.

Intended audience

This user manual is intended for all technical specialists who know motor control and high power electronics converter and this board is intended to be used under laboratory conditions.

Table of contents

About this document **1**
Table of contents **1**
1 Safety precautions **3**
2 Introduction **4**
3 EVAL-M1-CTF610N3 main features **6**
3.1 EVAL-M1-CTF610N3 board specifications 7
3.2 Pin assignment 9
4 Getting Started with EVAL-M1-CTF610N3 ..... **11**
4.1 Setting up the system 11
4.2 iMOTION™ development tools and software 13
4.2.1 MCEWizard setup overview 13
4.2.2 MCEDesigner setup overview 15
5 Hardware description of EVAL-M1-CTF610N3 ..... **17**
5.1 Inverter section using CIPOS™ Tiny IPM 17
5.1.1 DC bus sensing and MCEWizard configuration 18
5.1.2 Motor External Current feedback configuration and calculation 19
5.1.3 Inverter Overcurrent protection and Motor Gatekill configuration 21
5.2 Thermistor/NTC Characteristics and protection calculation 22
5.2.1 CIPOS™ Internal NTC – Thermistor Characteristics 22
5.2.2 Overtemperature Hardware Protection Circuit 23
5.2.3 NTC shutdown value calculation and configuration 24
5.3 Auxiliary power supply 25

Table of contents

5.4 Schematics for EVAL-M1-CTF610N3 26
5.5 PCB Layout for EVAL-M1-CTF610N3 28
6 Reference 35
Revision history 36

1 Safety precautions

In addition to the precautions listed throughout this manual, please read and understand the following statements regarding hazards associated with development systems.

Table 1 Precautions

	***Attention: The ground potential of the EVAL-M1-CTF610N3 system is biased to a negative DC bus voltage potential. When measuring voltage waveform by oscilloscope, the scope's ground needs to be isolated. Failure to do so may result in personal injury or death and equipment damage.***
	***Attention: Only personnel familiar with the drive and associated machinery should plan or implement the installation, start-up and subsequent maintenance of the system. Failure to comply may result in personal injury and/or equipment damage.***
	***Attention: The surfaces of the drive may become hot, which may cause injury.***
	***Attention: EVAL-M1-CTF610N3 system contains parts and assemblies sensitive to Electrostatic Discharge (ESD). Electrostatic control precautions are required when installing, testing, servicing or repairing this assembly. Component damage may result if ESD control procedures are not followed. If you are not familiar with electrostatic control procedures, refer to applicable ESD protection handbooks and guidelines.***
	***Attention: A drive, incorrectly applied or installed, can result in component damage or reduction in product lifetime. Wiring or application errors such as under sizing the motor, supplying an incorrect or inadequate DC supply or excessive ambient temperatures may result in system malfunction.***
	***Attention: Remove or connect the control board from or to the power drive. Wait three minutes after removing power from the power drive to discharge the bus capacitors. Do not attempt to service the drive until the bus capacitors have discharged to zero. Failure to do so may result in personal injury or death.***
	***Attention: EVAL-M1-CTF610N3 system is shipped with packing materials that need to be removed prior to installation. Failure to remove all packing materials which are unnecessary for system installation may result in overheating or abnormal operating condition.***

2 Introduction

The EVAL-M1-CTF610N3 evaluation power board is a part of the iMOTION™ Modular Application Design Kit for motor drives (iMOTION™ MADK). In order to run a motor, the matching control board is required to interface this power board.

The MADK platform is intended to use various power stages with different control boards. These boards can easily be interfaced through the 20-pin iMOTION™ MADK M1 such as Eval-M1-101Tconnector to control board. This board is equipped with 20-pin M1 connector and is intended for single motor control only.

This evaluation board is designed to give Easy-to-use power stage based on the Infineon's CIPOS™ Tiny Inteligent Power Module (IPM). The board is equipped with all assembly groups for sensorless field oriented control (FOC). It provides a single-phase AC-connector, rectifier and 3-phase output for connecting the motor. The power stage also contains emitter shunts for current sensing and a voltage divider for DC-link voltage measurement.

The EVAL-M1-CTF610N3 evaluation board has perfect compatibility, it is compatible with the DIP and SIP two kind of packaging form and compatible with the different level of power CIPOS™ Tiny IPM. For example, if you need to evaluate IM393-S6E/F, The evaluation board fully support to pin-to-pin assembly and power rating.but if you need to evaluate IM393-L6E/F or IM393-X6E/F Tiny IPM, you can only do function test evaluation and the power rating isn't satisfied.

The EVAL-M1-CTF610N3 evaluation board is available through regular Infineon distribution partners as well as on Infineon's website. The features of this board are described in the main features chapter of this document, whereas the remaining paragraphs provide information to enable the customers to copy, modify and qualify the design for production according to their own specific requirements.

Environmental conditions were considered in the design of the EVAL-M1-CTF610N3, but it is not qualified regarding safety requirements or manufacturing and operation over the whole operating temperature range or lifetime. The boards provided by Infineon are subject to functional testing only.

The block diagram of the EVAL-M1-CTF610N3 is depicted in Figure 1. This evaluation board includes an EMI filter and soft power up circuit, 20 pins iMOTION™ MADK-M1 interface connector, auxiliary power supply to provide 15V and 3.3V and the CIPOS™ Tiny IPM.

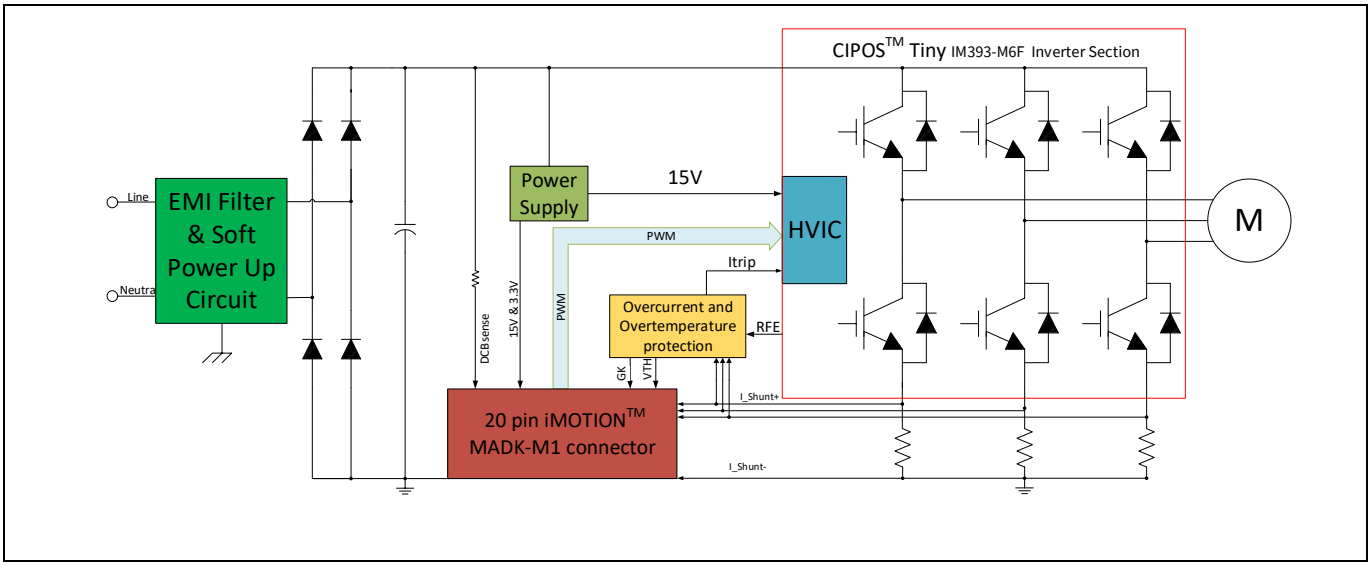

Figure 1 The Block Diagram of the EVAL-M1-CTF610N3

The hardware circuit regarding overtemperature and overcurrent protection is also included in this power board. The sense connection to open emitter shunt resistor is connected to the 20 pins iMOTION™ MADK-M1 interface connector. This power board is compatible with 2 packages(DIP and SIP) of CIPOS™ Tiny IPMs that feature Integrated Power Hybrid IC with Open Emitter pins and built-in high precision temperature monitor and over-current protection feature, along with the short-circuit rated IGBTs and integrated under-voltage lockout function, deliver high level of protection and fail-safe operation.

Evaluation boards are not subject to the same procedures as regular products regarding Returned Material Analysis (RMA), Process Change Notification (PCN) and Product Discontinuation (PD). Evaluation boards are intended to be used under laboratory conditions by technical specialists only.

3 EVAL-M1-CTF610N3 main features

EVAL-M1-CTF610N3 is an evaluation board for motor drive applications with 3 phase IPM. Combined in a kit with one of the available MADK control board options, it demonstrates Infineon's motion control IC and IPM technology for motor drives.

Main features of CIPOS™ Tiny IPM IM393-M6F are:

- Integrated gate drivers and bootstrap function
- Temperature monitor
- Protection shutdown pin
- Low VCE(on) Trench IGBT technology
- Under voltage lockout for all channels
- Matched propagation delay for all channels
- 3.3V Schmitt-triggered input logic
- Cross-conduction prevention logic
- Isolation 2000V_{RMS} min and CTI>600
- Recognized by UL(Pending)

The evaluation board characteristics are:

- Input voltage 160~265VAC
- Maximum 600W motor power output
- Compatble with DIP and SIP
- On board EMI filter
- Current sensing with single shunt or leg shunt
- Auxiliary power supply with 15V, 3.3V
- Overcurrent protection
- Overtemperature hardware protection
- Sensing of DC-link voltage
- Thermistor output
- Fault diagnostic output
- Measurement test-points compatible to standard oscilloscope probes
- PCB is 100 mm × 123 mm and has two layers with 35µm copper each
- RoHS complaint

3.1 EVAL-M1-CTF610N3 board specifications

Table 2 depicts the important specifications of the evaluation board EVAL-M1-CTF610N3.

Table 2 EVAL-M1-CTF610N3 board specifications

Parameters	Values	Conditions / comments
Input		
Voltage	165 - 265 V_{rms}	lower AC input, less motor power output
Input current	3.2A_{rms}	input 220 V_{AC}, T_a=25°C, IM393
Output		
Power (3phases)	600 W	input 220V_{AC}, f_{PWM}=6 kHz, T_a=25°C, T_h=70°C
Current per leg	5.1A_{rms}	input 220V_{AC}, f_{PWM}=6 kHz, T_a=25°C, T_h=70°C
DC Bus Voltage		
Maximum DC bus voltage	420 V	
Minimum DC bus voltage	120 V	
Switching Frequency		
Inverter switching frequency f_{PWM}	20 kHz (max)	
Current feedback		
Inverter current sensing resistor RS3,RS4,RS5	100 mΩ	
Protections		
Output current trip level	[1]6.6 A_{peak}	Configured by changing pull up resistor R37.
Temperature trip level	100 °C	For controller board Eval-M1-101T
On board power supply		
15 V	15 V ± 2 %, max. 500 mA	Used for CIPOS™ IPM gate driver and LDO
3.3 V	3.3 V ± 1 %, max. 300 mA	Supplying the 3.3V to the controller board and protection circuits
PCB characteristics		
Material	FR4, 1.6mm thickness, 2 layers. 35 µm copper thickness	
Dimension	100 mm x 123 mm	
System environment		
Ambient temperature	From 0 to 50°C	Non-condensing, maximum RH of 95 %

[1] For iMOTION™ IC IMC1xx, there are three types of Gatekill Input Source (Refer to section 5.1.3 or control board user manual for detail). Please note that, if select comparator for Gatakill Input Source, the external Gatakill signal will be not used. And the leg I_Shunt will be compared by the internal comparator with the “Gatekill Comparator Reference” value set in MCEWizard only.

Figure 2 points out the functional groups on the top side of the EVAL-M1-CTF610N3 evaluation board.

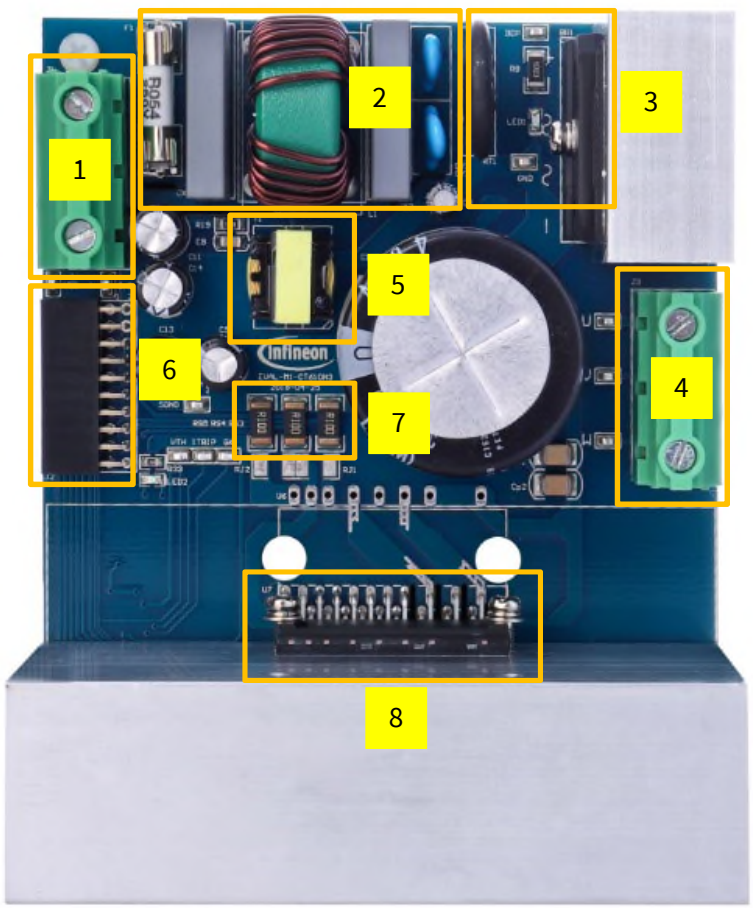

1. J1 - AC Input connector
2. FUSE and EMI Filter
3. NTC and Rectifier Bridge
4. J3 - Motor phase connector
5. T1-Auxiliary power supply transfomer
6. J2 - 20 pin iMOTION™ MADK-M1 interface connector for controller board
7. Current sensing shunt resistor RS3, RS4, RS5
8. CIPOS™ Tiny IPM U7 (SIP) or U6 (DIP)

Figure 2 Functional groups of the EVAL-M1-CTF610N3 evaluation board's top side

Figure 3 points out the functional groups on the bottom side of the EVAL-M1-CTF610N3 evaluation board.

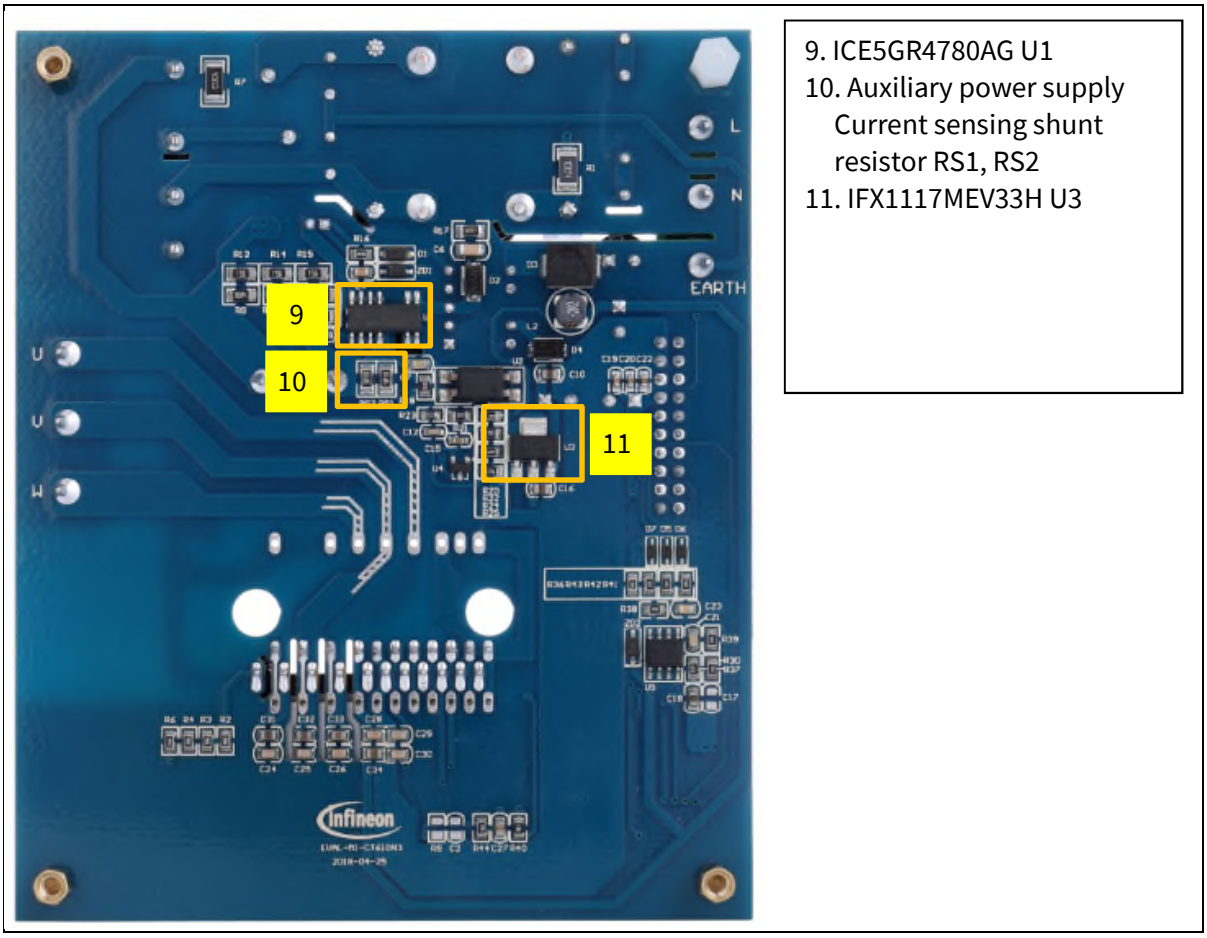

9. ICE5GR4780AG U1
10. Auxiliary power supply Current sensing shunt resistor RS1, RS2
11. IFX1117MEV33H U3

Figure 3 Functional groups of the EVAL-M1-CTF610N3 evaluation board's bottom side

3.2 Pin assignment

General information about the connectors of the EVAL-M1-CTF610N3 evaluation board is reported. Table 3 includes the details of the AC input connector J1.

Table 3 J1- AC Line connector

S. No.	Pin	Details
1	**L**ine	AC line input
2	**N**eutral	AC neutral input
3	**E**arth	Earth ground

Table 4 provides the pin assignments of the 20 pins iMOTION™ MADK-M1 interface connector J2. This connector is the interface to the controller board.

Table 4 J2 - iMOTION™ MADK-M1 20 pin interface connector for controller board

Pin	Name	Pin Name Connectors
1	PWMUH	3.3 V compatible logic input for high side gate driver-Phase U

2	GND	Ground
3	PWMUL	3.3 V compatible logic input for low side gate driver-Phase U
4	GND	4 GND Ground
5	PWMVH	3.3 V compatible logic input for high side gate driver-Phase V
6	+3.3V	On board 3.3 V supply
7	PWMVL	3.3 V compatible logic input for low side gate driver-Phase V
8	+3.3V	On board 3.3 V supply
9	PWMWH	3.3 V compatible logic input for high side gate driver-Phase W
10	I_U	Positive Current sense output
11	PWMWL	3.3 V compatible logic input for low side gate driver-Phase W
12	I_U-	Negative current sense output or Ground
13	GK	Gate kill signal – active low when overcurrent is detected
14	DCBSense	DC bus positive voltage, scaled in 0-3.3 V range by a voltage divider
15	VTH	Thermistor Output
16	I_V	Positive Current sense output
17	I_V-	Negative current sense output or Ground
18	I_W	Positive Current sense output
19	I_W-	Negative current sense output or Ground
20	VCC	15 V Power Supply

Table 5 provides the details of the motor side connector J4.

Table 5 J4- Motor side connector

S. No.	Pin	Details
1	U	Connected to motor phase U
2	V	Connected to motor phase V
3	W	Connected to motor phase W

4 Getting Started with EVAL-M1-CTF610N3

In order to run the motor system, a combination of the iMOTION™ MADK power board (EVAL-M1-CTF610N3) and the matching MADK control board is required. The iMOTION™ Software Tools MCEDesigner and MCEWizard are also required in order to initialy setup the system, as well as to control and fine-tune the system performance to match users exact needs. This chapter provides more details on setting up the system and getting started with iMOTION™ MADK development platform.

4.1 Setting up the system

After downloading and installing the iMOTION™ PC Tools (MCEWizard and MCEDesigner), following steps needs to be executed in order to run the motor. Refer to user manul for iMOTION™ MADK control board such as (EVAL-M1-101T), MCEWizard and MCEDesigner documentation for more information.

Figure 4 shows the system connection using EVAL-M1-CTF610N3 and control board (used control board EVAL-M1-101T for example).

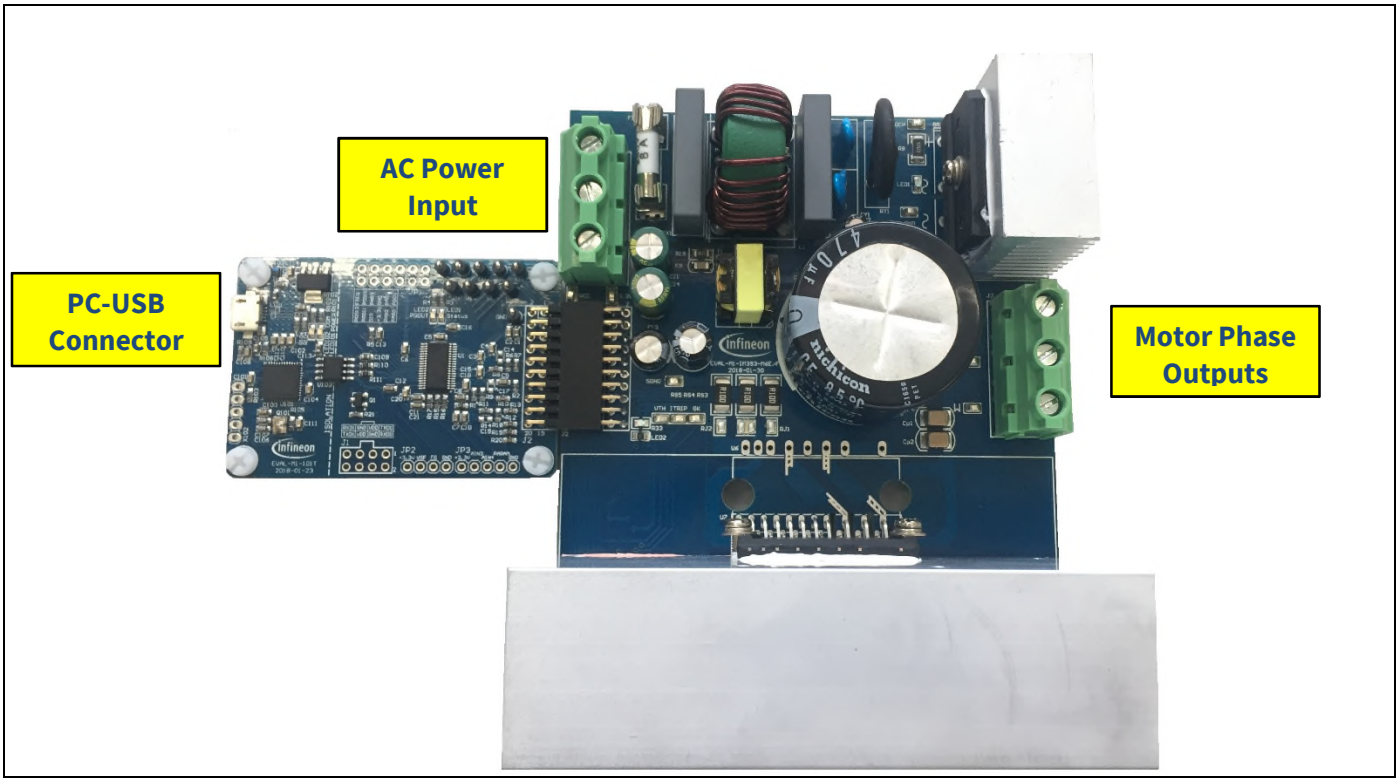

Figure 4 System connection example using EVAL-M1-CTF610N3 and EVAL-M1-101T

1. Connect PC-USB connector on the on-board-debugger to the PC via USB cable.
2. Connect EVAL-M1-CTF610N3's MADK M1 20-pin interface connector (J2) to control board (see Figure 4).
3. Get the latest "IMC101T-T038 MCE Software Package" available on www.infineon.com/imotion-software web page. (Infineon iMOTION™ control IC IMC101T-T038 is used for control board EVAL-M1-101T).
4. Connect motor phase outputs to the motor.
5. Use MCEWizard to enter the motor and evaluation board hardware parameters and click button "Export to Designer file (.txt)" to system drive parameters file which will be used by MCEDesigner.
6. Connect AC power to power input connector and power on system.

7. Open MCEDesigner and open MCEDesigner default configuration file (.irc) for IMC101T devices (IMC101T_xx.irc) by clicking “File” menu and select “Open” in the pull down list.
8. Import system drive parameters file (generated in step 5) into MCEDesigner by clicking “File” > “Import Drive Parameters”. Select “Update All” radio button.
9. Program the MCE Firmware and system parameters into the internal Flash memory of iMOTION™ IC by clicking “Tools > Programmer “in the pull down menu, and then clicking on the “Program Firmware and Parameter” radio button. See chapter MCEDesigner setup overview setion 4.2.2 for more details. If the latest version of MCE firmware is already programmed into the IMC101T-T038 IC, then programming firmware can be skipped by selecting “Program Parameters” radio button option. Finally click “Start” button to program firware and parameter (or parameters only when programming firmware was skipped).
10. Start the motor by clicking the green traffic light button in the control bar.

4.2 iMOTION™ development tools and software

The iMOTION™ Development Tool installers for MCEDesigner and MCEWizard are available for download via Infineon iMOTION™ website (http://www.infineon.com/imotion-software). All the available tools and software variants are listed there.

On-board debugger uses the SEGGER J-Link's driver for UART communication with IMC101T-T038. J-Link driver will be installed during the MCEDesigner installation. In case the driver is not installed properly, please go to SEGGER J-Link website to download and install the latest J-Link "Software and Documentation pack for Windows".

4.2.1 MCEWizard setup overview

After installing the MCEWizard, the shortcut for MCEWizard appears on the Windows desktop. Double click the shortcut to open the MCEWizard and configure the parameters for evaluation boards or motor. Figure 6 shows the "Welcome Page" for MCEWizard, where the MADK control board or power board can be selected through the pull-down list. Infineon keeps releasing new MADK controller and power boards. Therefore, it could happen that some of the newest power boards are not pre-configured in the MCEWizard tool and cannot be selected through the pull-down menu. In that case, the user should select any other power board (as similar as possible) and follow the MCEWizard setup steps by entering the parameter values which are specific to the chosen board. Make sure both "I have modified the circuit board" and "Enable advanced question" checkmarks are selected. Please refer to the User Manual of the corresponding power board for additional information.

After selecting the MADK control and the power board, start the MCEWizard system setup procedure by clicking the "Next" button in the right bottom corner as shown in Figure 6.

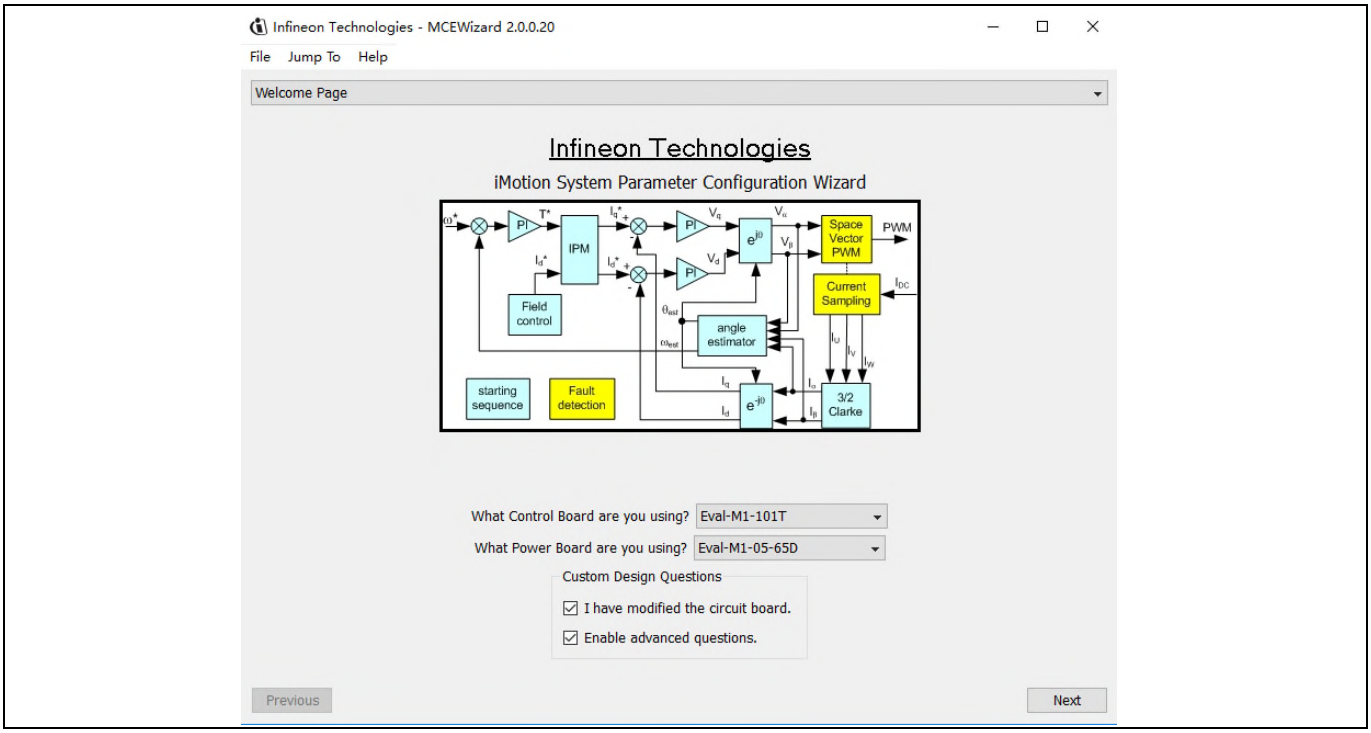

Figure 5 Welcome Page of MCEWizard

iMOTION™ MADK system enables users to easily test different combination of control and power board with their motors. User should be familiar with the system level parameters which are related to the motor used. There are very limited numbers of parameters which are specific to the control board or power board hardware. Table 6 provides the MCEWizard setup overview for hardware related parameters. Similar tables will be

available in each power board's User Manual. Combination of this table and the corresponding table of the power board provides enough information to setup the MADK-based motor drive system in shortest time.

Table 6 MCEWizard setup overview table

Page	Parameter	Value	Comment
Welcome Page	Power Board selecting	MADK power board name	If no, select similar power board to modify
Options Page	Motor 1 Shunt Configuration	100mΩ	
Question 3	Controller Supply Voltage	Refer to control board user manual	
Question 19	Max DC Bus Voltage	420V	
Question 23	DC Bus Sensing High Resistor	2MΩ	
Question 24	DC Bus Sensing Low Resistor	Refer to control board user manual	13.3kΩ by default
Question 54	NTC Temperature Shutdown value	Calculated as the Section 5.2.3	Refer to the control board user manual
Question 63	GateSense Low-Side Devices	High is true	
Question 64	GateSense High-Side Devices	High is true	
Question 69	Motor 1 Current Input	Calculated as the Section 5.1.2	

After all the MCEWizard questions are answered, the "Verify & Save Page" will be shown as in Figure 6

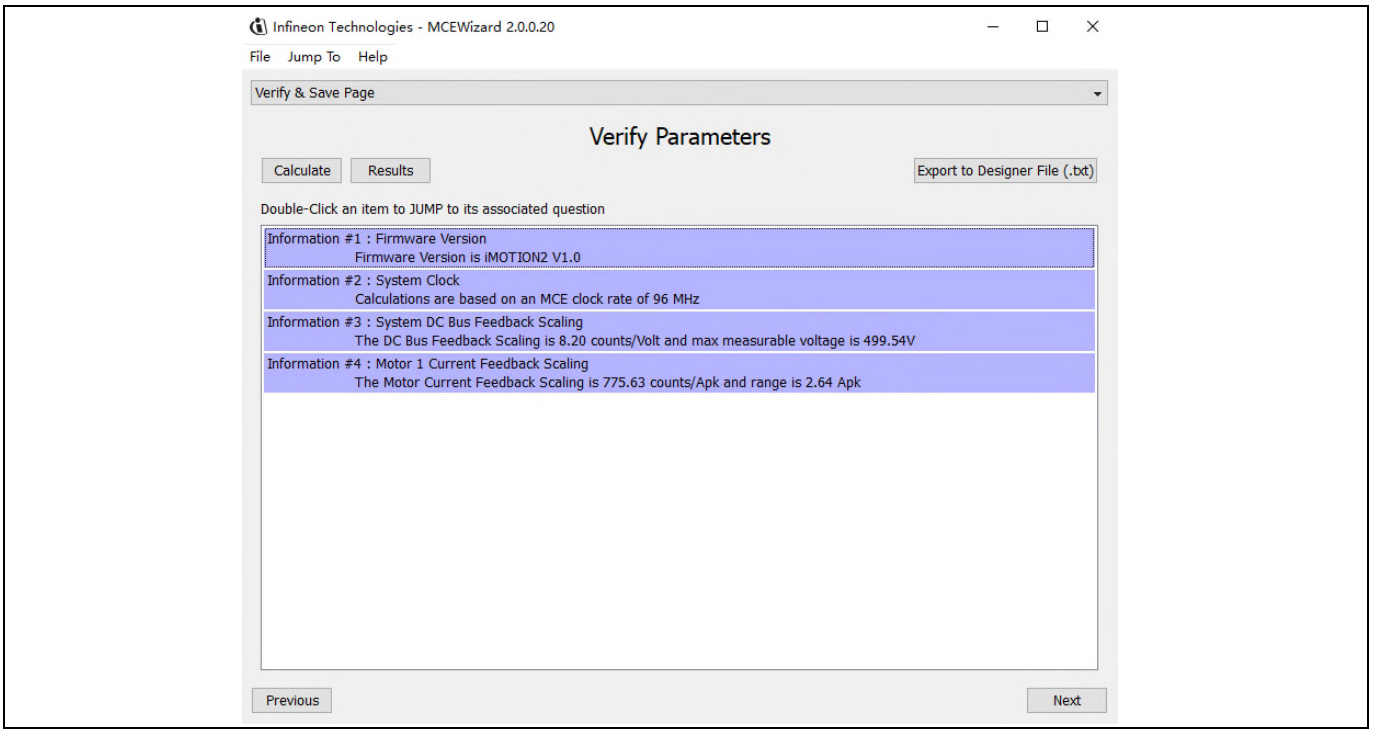

Figure 6 Verify and Save page for MCEWizard

Click "Calculate" button and "Export to Designer File (.txt)" button to save the parameter file which will be used by the MCEDesigner in the next steps.

4.2.2 MCEDesigner setup overview

After installing MCEDesigner installer, there is a shortcut for MCEDesigner on Windows desktop. Double click the shortcut to open MCEDesigner and then open “IMC101T_xx.irc” file as shown in Table 6.

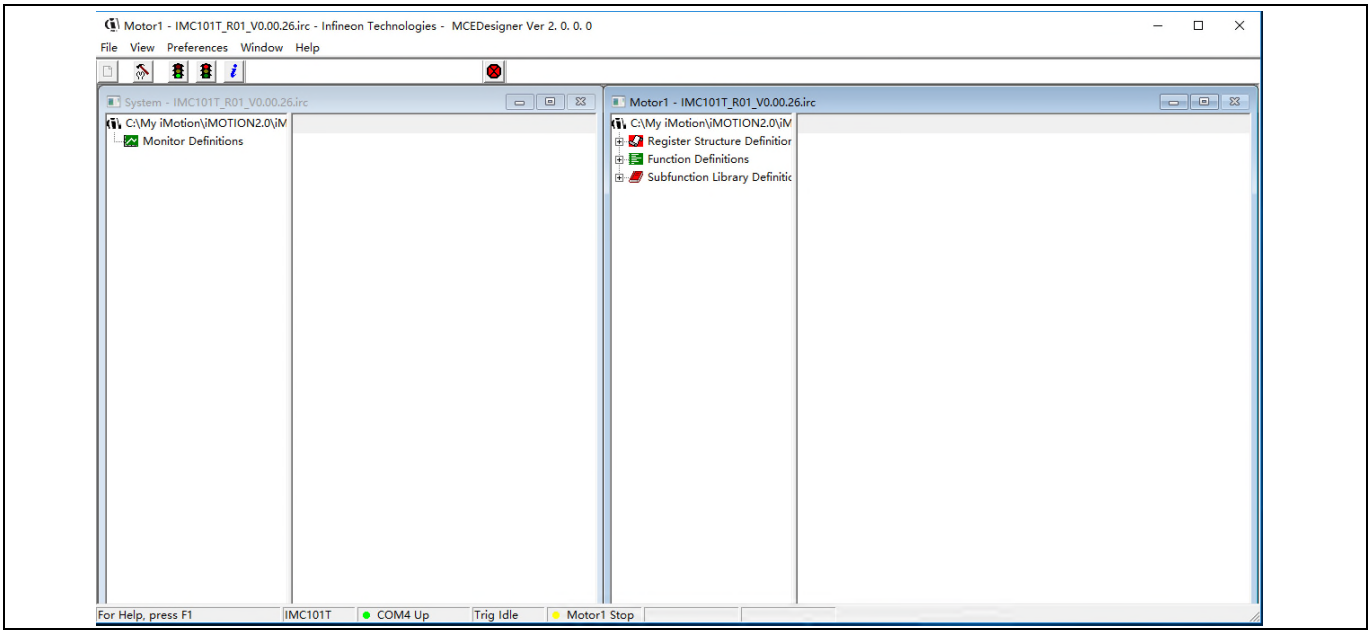

Figure 7 MCEDesigner’s Main Display for EVAL-M1-101T

To program system drive parameters into IMC101T-T038, please click “Tools” menu and select “Programmer” in the pull down list. The pop-up window “Program IMC controller” will show up as in Figure 8. Click on the “Program Parameters” radio button (this is the default option), and then select the Drive System Parameter file created using MCEWizard by clicking on “Browse”. Finally, click on the “Start” button to program the parameter file into the IMC101T-T038 IC.

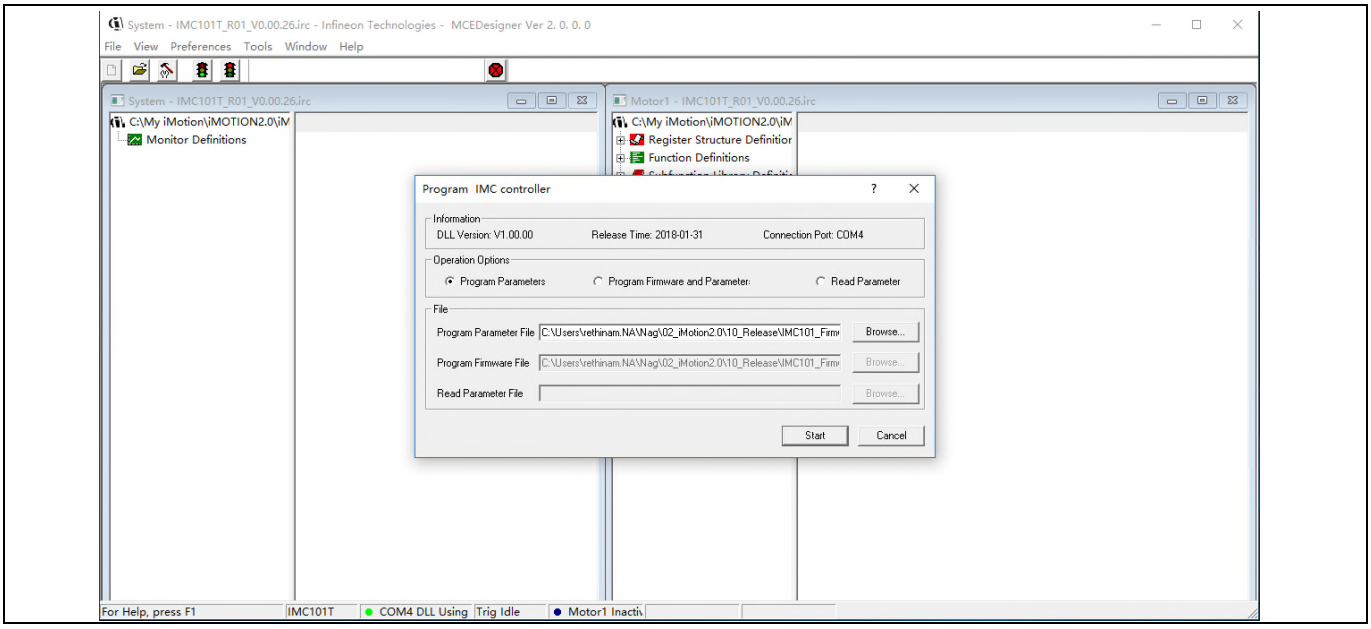

Figure 8 “Program IMC Controller” pop-up window

After Drive System Parameter file has been programmed into IMC102 controller, and the motor drive system is powered, the MCEDesigner can be used to start/stop the motor, display motor current traces, change the motor speeds, modify drive parameters and many other functions. Please refer to the MCEDesigner documentation for more details.

Note: *On-board Debugger portion of EVAL-M1-101T is galvanically isolated from the controller portion and the attached power board. In order to program the parameters or firmware to the IMC101T-T038 controller, the 3.3V DC voltage needs to be supplied to the controller portion of the EVAL-M1-101T. This voltage can either be supplied by the power board (MADK power boards are designed to supply the 3.3V to the control board through M1 connector) or by feeding the 3.3V DC voltage to the control board through some of the available 3.3V access/test points if the power board is not attached to the EVAL-M1-101T control board.*

To program new firmware and Drive System Parameter into IMC101T-T038, please click “Tools” menu and select “Programmer” in the pull down list. The pop-up window “Program IMC controller” will show up as in Figure 9. Click on the “Program Firmware and Parameter” radio button, and select the Drive System Parameter file created using MCEWizard by clicking on the “Browse” button on the row of “Program Parameter File”, and then select the firmware file by clicking on the “Browse” button on the row of “Program Firmware File”. Finally, click on the “Start” button to program the parameter file into the IMC101T-T038 IC.

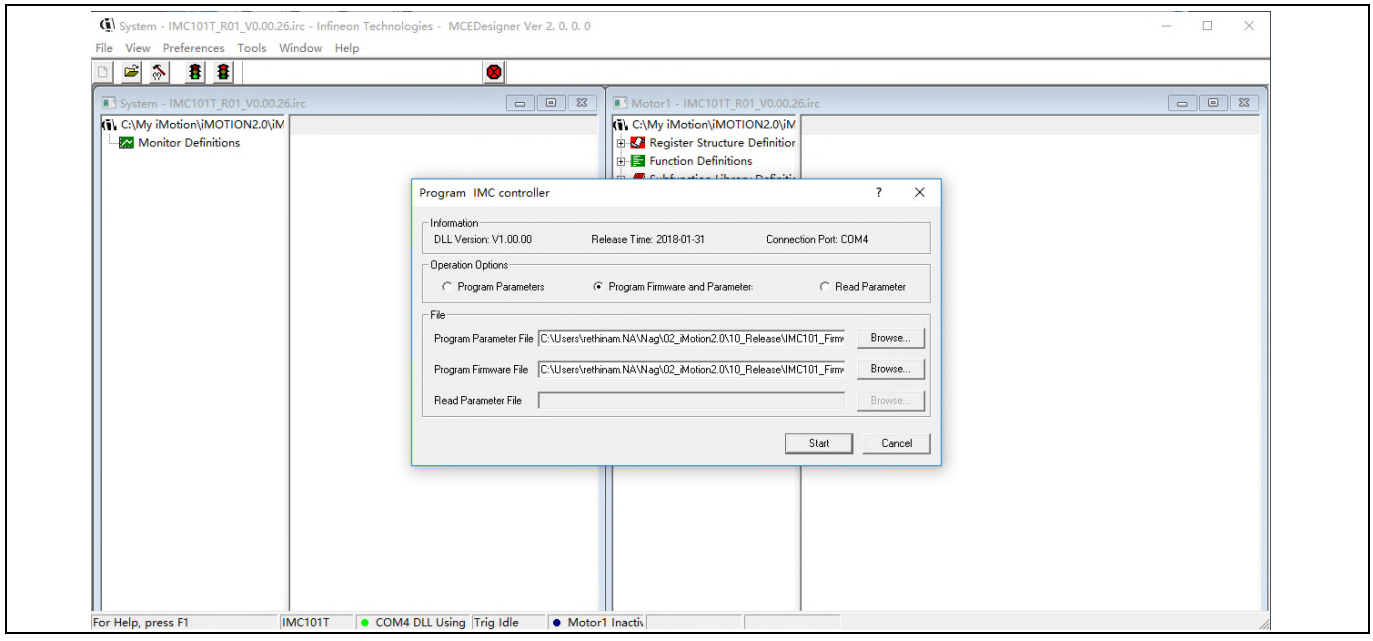

Figure 9 Program Firmware and Parameter in “Program IMC Controller” pop-up window

All latest firmware file for different type of iMOTION™ control ICs are available for download via Infineon iMOTION™ website (http://www.infineon.com/imotion-software).

5 Hardware description of EVAL-M1-CTF610N3

To meet individual customer requirements and make the EVAL-M1-CTF610N3 evaluation board a basis for development or modification, all necessary technical data like schematics, layout and components are included in this chapter.

5.1 Inverter section using CIPOS™ Tiny IPM

The inverter section is also implemented using the CIPOS™ Tiny IPM as sketched in Figure 10. This advanced IPM is a combination of Infineon's newest low VCE(on) Trench IGBT technology optimized for best trade-off between conduction and switching losses and the industry benchmark 3 phase high voltage, high speed driver (3.3V compatible) in a fully isolated thermally enhanced package. A built-in high precision temperature monitor and over-current protection feature, along with the short circuit rated IGBTs and integrated under-voltage lockout function, deliver high level of protection and fail-safe operation. Using a dual in line package with full transfer mold structure resolves isolation problems to heatsink. The three pairs of capacitors C24 and C31, C25 and C32, C26 and C33 are used as bootstrap capacitors to provide the necessary floating supply voltages V_{BS3}, V_{BS2} and V_{BS1} respectively.

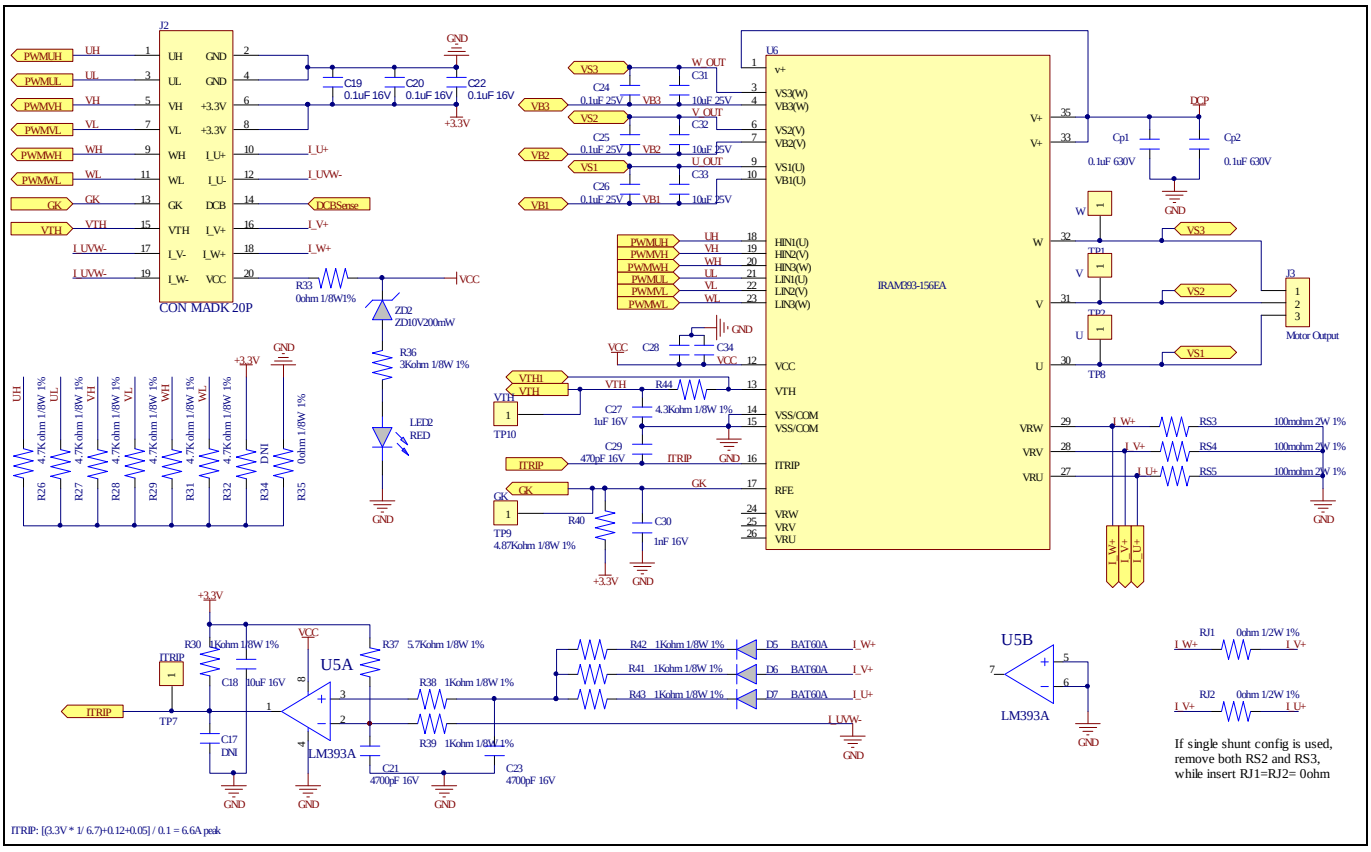

Figure 10 Schematic of the 3-phase inverter section using CIPOS™ Tiny IPM on EVAL-M1-CTF610N3

5.1.1 DC bus sensing and MCEWizard configuration

Pin 14 and pin 26 of connector J3 provide access to the DC-link voltage DCBsense. Three possible feedback cases are associated with these pins. Figure 11 provides the DC bus sense resistor details. By default, the resistor R5 is not mounted on EVAL-M1-CTF610N3. There must be a pull-down resistor mounted on the corresponding controller board.

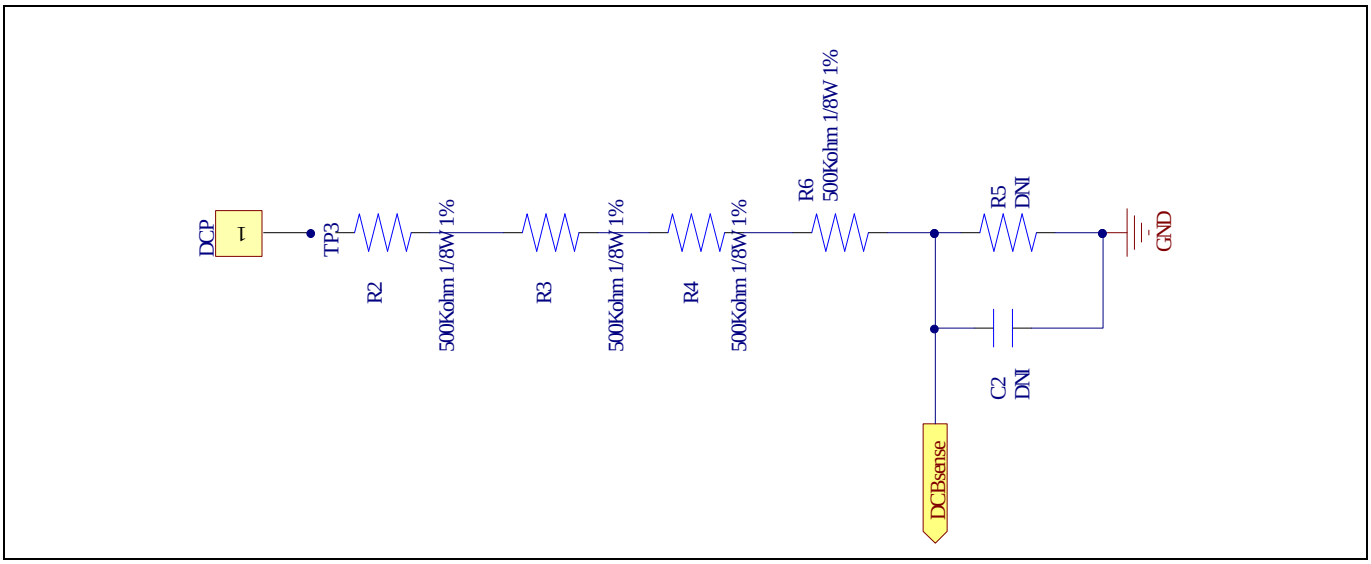

Figure 11 DC bus sense resistor on EVAL-M1-CTF610N3 evaluation board

If a pull down resistor of 13.3 kΩ referred to ground is inserted either on the EVAL-M1-CTF610N3 evaluation board or on the control board, the DCBSense voltage results in the range of 0 to 3.3 V on the pin reflecting a DC bus voltage range of 0 to 420 V.If a pull down resistor of 13.3 kΩ is inserted on both, EVAL-M1-CTF610N3 evaluation board and on the control card, the DCBSense results scale to 0-1.65 V. No safety issue occurs. If no feedback is desired on the DCBSense pin, R2, R3, R4 or R6 should be removed to avoid high voltage on the connector.

The high side resistors R2, R3, R4 and R6 for the DC bus sensing resistor divider on the controller board EVAL-M1-CTF610N3 are 2000kΩ, and should be configured in MCEWizard as shown in Figure 12. For the low side resistor value, please refer to the User Manual of the corresponding control board.

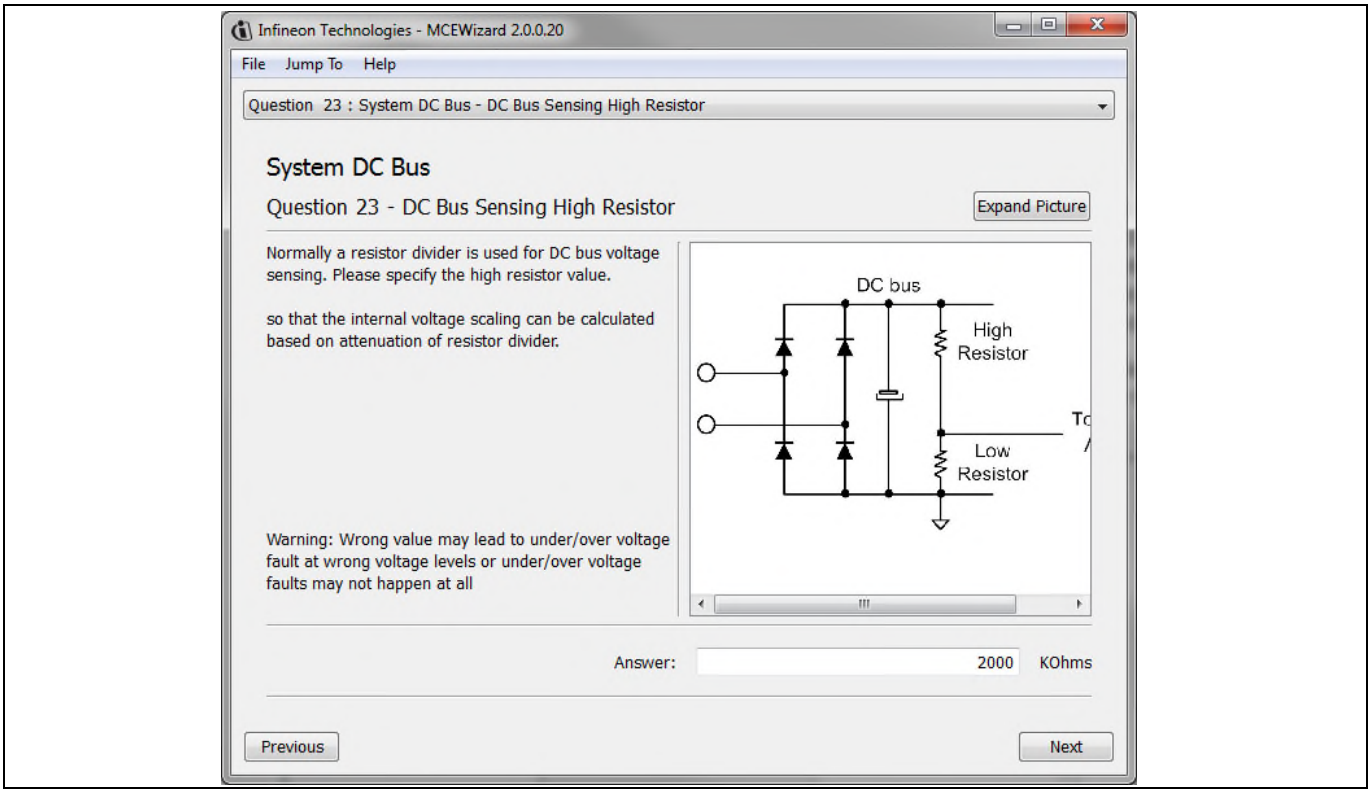

Figure 12 DC bus sensing configuration in MCEWizard

5.1.2 Motor External Current feedback configuration and calculation

The current input value is product of the shunt resistance in milliohms and gain of External current sense amplifier for EVAL-M1-101T as shown in Figure 13.

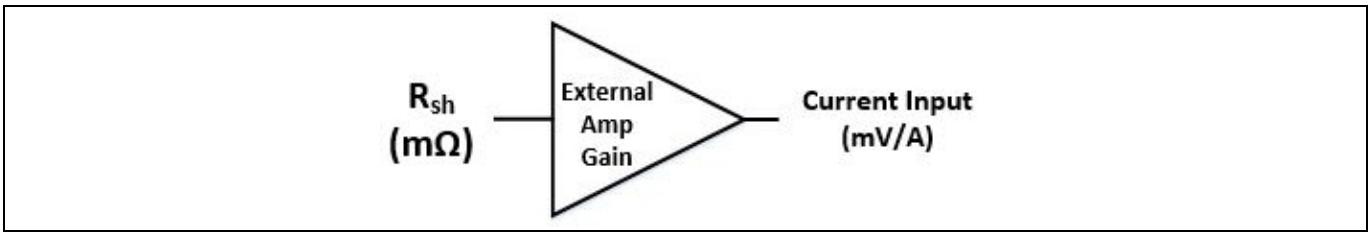

Figure 13 Current shunt feedback and sample timing for EVAL-M1-101T

The External Amplifier Gain circuit can be found in the schematics or User Manual for the control board (For example, EVAL-M1-101T see Figure 14).

Figure 14 depicts IU+ current feedback sensing circuity on EVAL-M1-101T evaluation board. Please note that the default external amplification gain is less than 1 for current sense in this evaluation board.

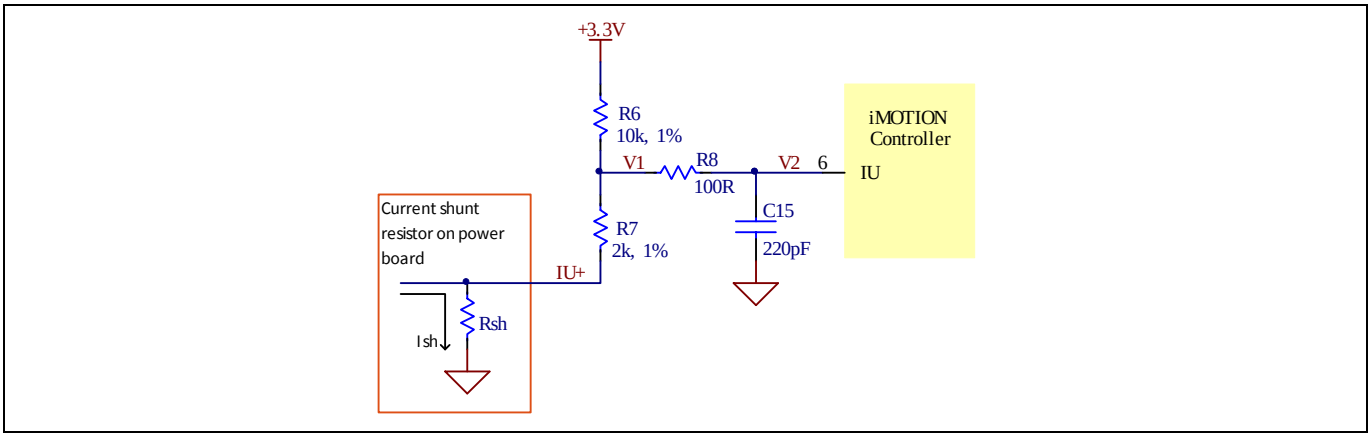

Figure 14 The part of Current feedback on the EVAL-M1-101T evaluation board

Based on the principle of Kirchhoff's voltage law,

$$V_2 \approx V_1 \approx (V_{DD} - I_{sh} * R_{sh}) * \frac{R_7}{R_6 + R_7} + I_{sh} * R_{sh} = \frac{R_7}{R_6 + R_7} V_{DD} + \frac{R_6}{R_6 + R_7} R_{sh} * I_{sh}$$

$$Current\ input = \frac{R_6}{R_6 + R_7} R_{sh} = \frac{5}{6} R_{sh}$$

Based on this calculation, the current input for the MADK combination of EVAL-M1-101T and EVAL-M1-CTF610N3 is 83.3 mV/A.

Please use same procedure to calculate the current input for other combinations of MADK boards and enter it into MCEWizard as shown in Figure 15.

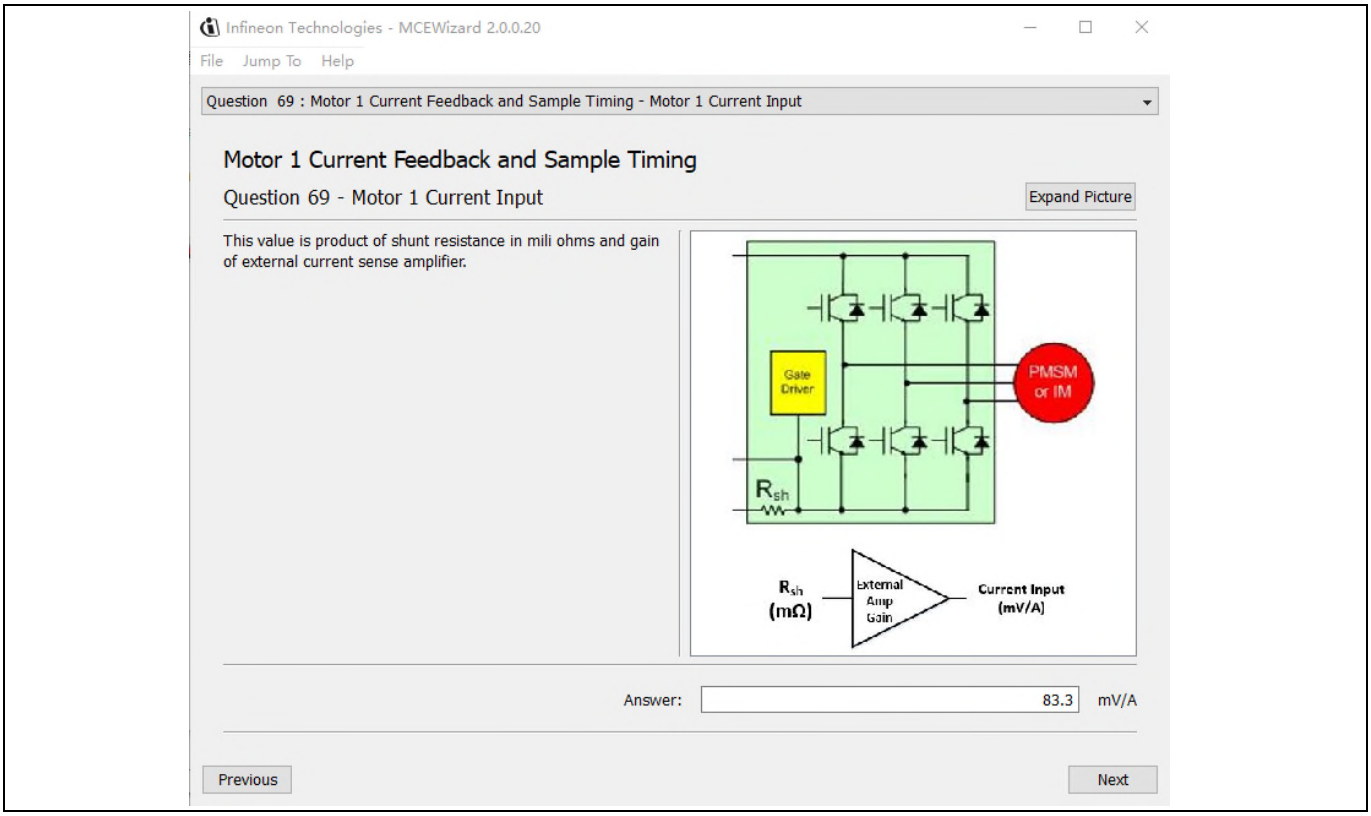

Figure 15 Current feedback configuration in MCEWizard for EVAL-M1-101T and EVAL-M1-CTF610N3

5.1.3 Inverter Overcurrent protection and Motor Gatekill configuration

Figure 16 displays the overcurrent protection circuitry. The current sensing signal I_Shunt is connected to ITRIP via through the comparator U5A, and ITRIP is filtered through capacitor C29.

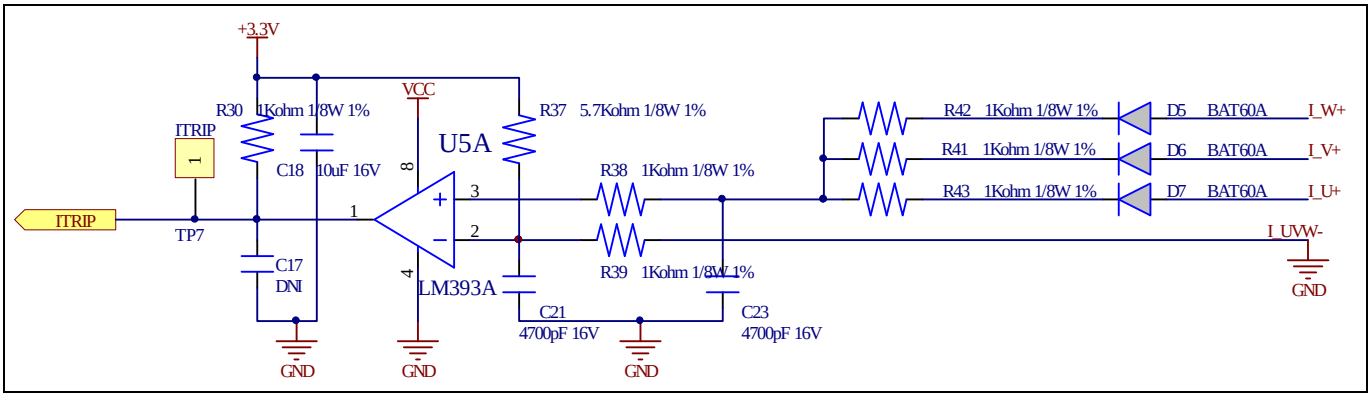

Figure 16 Overcurrent protection circuit on the EVAL-M1-CTF610N3 evaluation board

The typical value of ITRIP positive going threshold $V_{IT,TH+}$ is 490mV. So the inverter output peak current is about 6.6Apeak.

$$I_{trip} = \frac{VDD * \frac{R39}{R37 + R39} + V_{F-D5/D6/D7} + V_{offset}}{R_{SHUNT}}$$

If the motor peak current larger than the setting value I_{trip} for more than ITRIP Input filter time, RFE will be trigger low which is mean that the signal Gatekill is active. For iMOTION™ IMC1xx control IC, there are three types of Gatekill Input Source (as shown in Figure 17). For Gatekill Input Source configured Gatekill-Pin or Both, iMOTION™ control IC will stop the Motor when the signal GateKill is active.

But please note that, if select comparator for Gatakill Input Source, the external Gatakill signal will be not used. And the current sensing signal I_Shunt will be compared by the internal comparator with the “Gatekill Comparator Reference” value set in MCEWizard only.

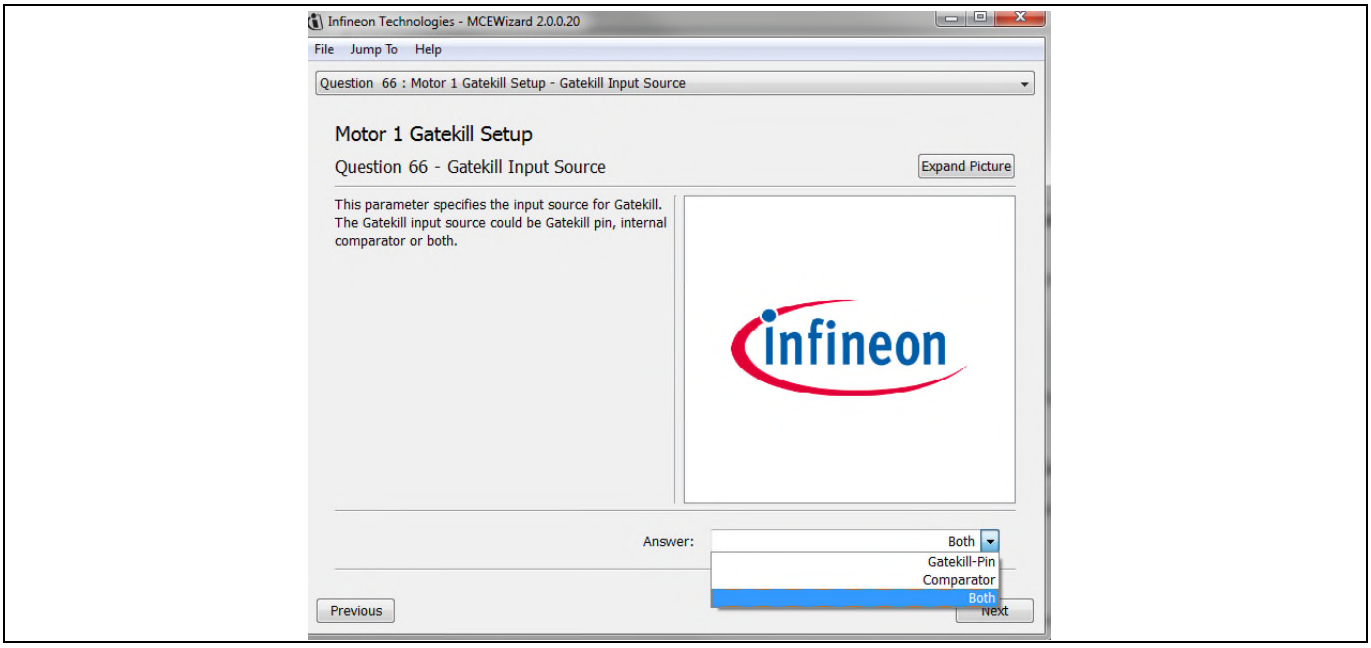

Figure 17 Gatekill configuration in MCEWizard for EVAL-M1-101T

5.2 Thermistor/NTC Characteristics and protection calculation

This board provides Thermistor/NTC output on pin 15 of the 20 pins connector J3. Temperatures can be calculated by resistor measurement.

5.2.1 CIPOS™ Internal NTC – Thermistor Characteristics

The thermistor characteristics for CIPOS™ Tiny IPM with build in NTC are listed as summarized in Table 7.

Table 7 CIPOS™ Internal NTC – Thermistor Characteristics

Description	Condition	Symbol	Value			Unit
			min	typ	max	
Resistor	T_{NTC} = 25°C	R_{NTC}	44.65	47	49.35	kΩ
Resistor	T_{NTC} = 125°C	R_{NTC}	1.27	1.41	1.56	kΩ
B-constant of NTC		B(25/100)	3989	4050	4111	K
Temperature Range			-40	-	125	℃

The VTH pin of CIPOS™-Modules provides direct access to the NTC, which is referenced to VSS. An external pull-up resistor connected to +3.3V ensures that the resulting voltage can be directly connected to the microcontroller.

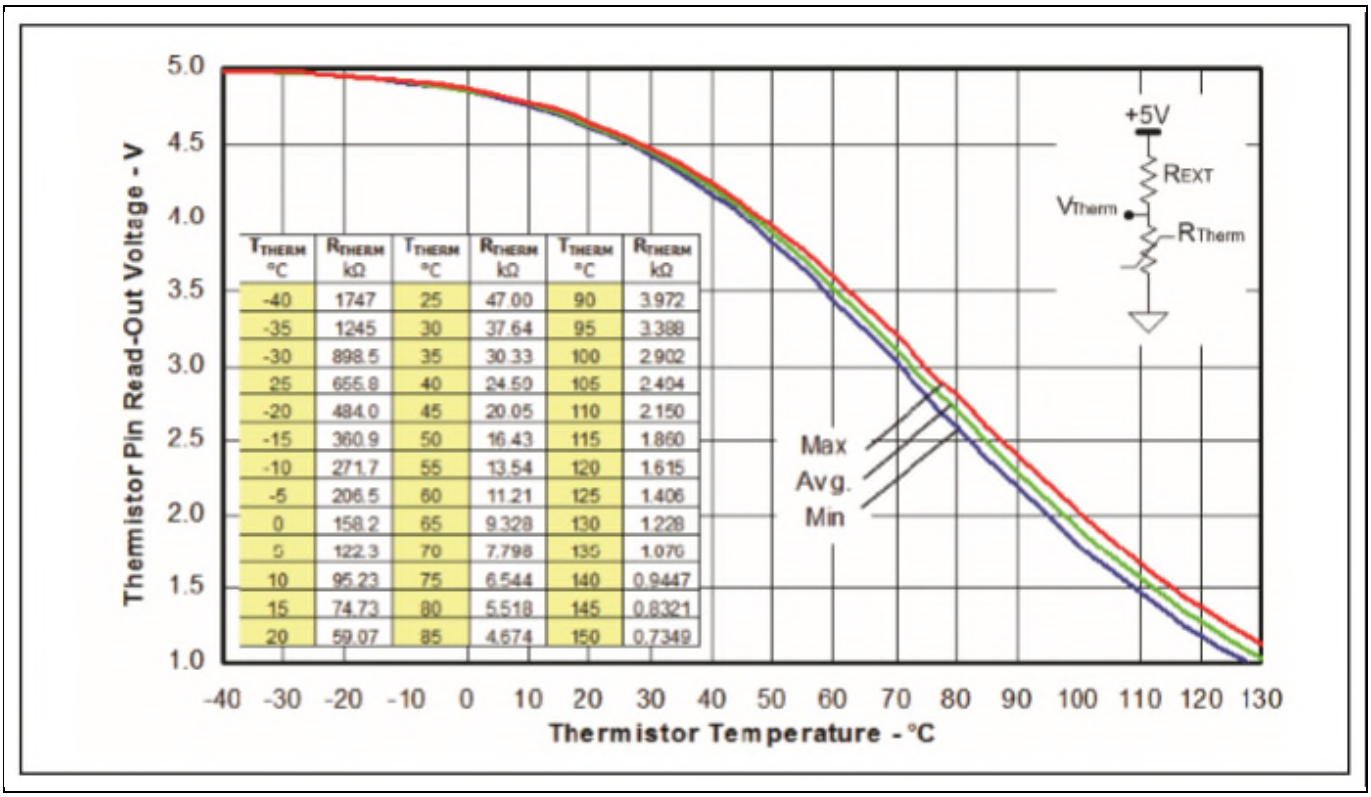

TTHERM °C	RTHERM kΩ	TTHERM °C	RTHERM kΩ	TTHERM °C	RTHERM kΩ
-40	1747	25	47.00	90	3.972
-35	1245	30	37.64	95	3.388
-30	898.5	35	30.33	100	2.902
25	655.8	40	24.50	105	2.404
-20	484.0	45	20.05	110	2.150
-15	360.9	50	16.43	115	1.860
-10	271.7	55	13.54	120	1.615
-5	206.5	60	11.21	125	1.406
0	158.2	65	9.328	130	1.228
5	122.3	70	7.798	135	1.070
10	95.23	75	6.544	140	0.9447
15	74.73	80	5.518	145	0.8321
20	59.07	85	4.674	150	0.7349

Figure 18 Thermistor readout vs.temperature(with 4.7kohm Rext pull-down resistor)and typical thermistor resistance values vs.temperature table

5.2.2 Overtemperature Hardware Protection Circuit

In this evaluation design kits EVAL-M1-CTF610N3 and EVAL-M1-101T, the VTH pin is directly connected to the VTH pin for controller IC IMC101T.

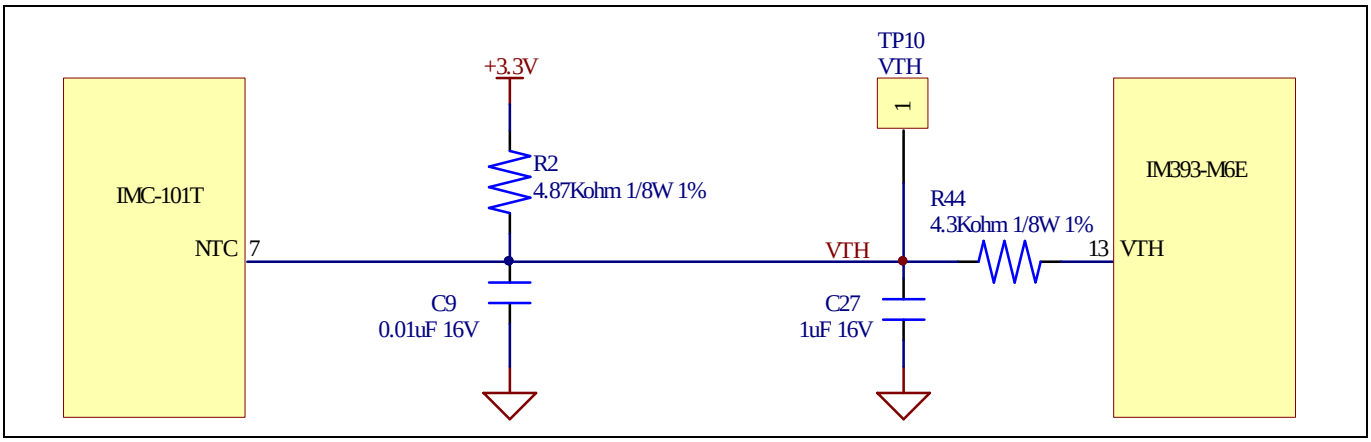

Figure 19 Overtemperature protection circuit schematic for EVAL-M1-CTF610N3 and EVAL-M1-101T

5.2.3 NTC shutdown value calculation and configuration

External NTC Temperature shutdown value can be calculated as shown below and configured in MCEWizard as shown in Figure 20. For pull-up resistor on evaluation control board, please refer to the control board's User Manual. For example, for EVAL-M1-101T, the pull-up resistor on the control board is 4.87kΩ. The value of resistors R_{EXT} and R_{THERM} on IM393 are 4.87kΩ and 2.902kΩ (see Figure 19). The typical value of R_{NTC} at 100°C is 2.902kΩ for IPM IM393 which is used in EVAL-M1-CTF610N3.

$$V_{Therm} = \frac{R_{NTC@setting\ temperature}}{R_{NTC@setting\ temperature} + R_{pull-up\ on\ Control\ board} + R44} V_{DD}$$

$$V_{shut\ down} = V_{Therm} + \frac{R44}{R_{NTC@setting\ temperature} + R_{pull-up\ on\ Control\ board} + R44} V_{DD}$$

If the setting temperature is 100°C, the shutdown value should be 1.97V. If the setting temperature is 85°C, the shutdown value should be 2.14V.

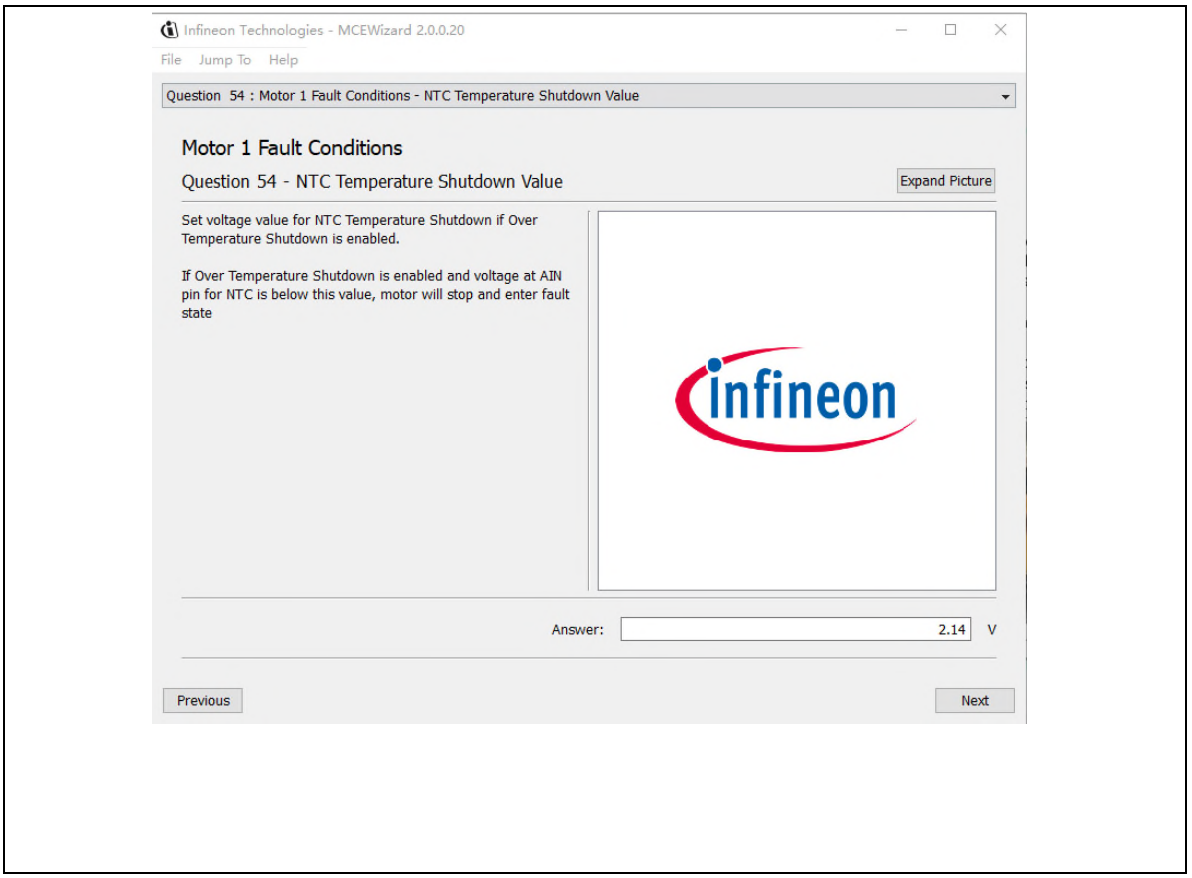

Figure 20 External temperature sense input configuration in MCEWizard

5.3 Auxiliary power supply

Figure 21 depicts the schematic of the auxiliary power supply for the EVAL-M1-CTF610N3 board. The circuit includes the latest CoolSET 5 of Infineon and flyback toplogy, directly output 15V and 6V. V_{CC} is connected to the gate drivers inside the CIPOS™ IPM.

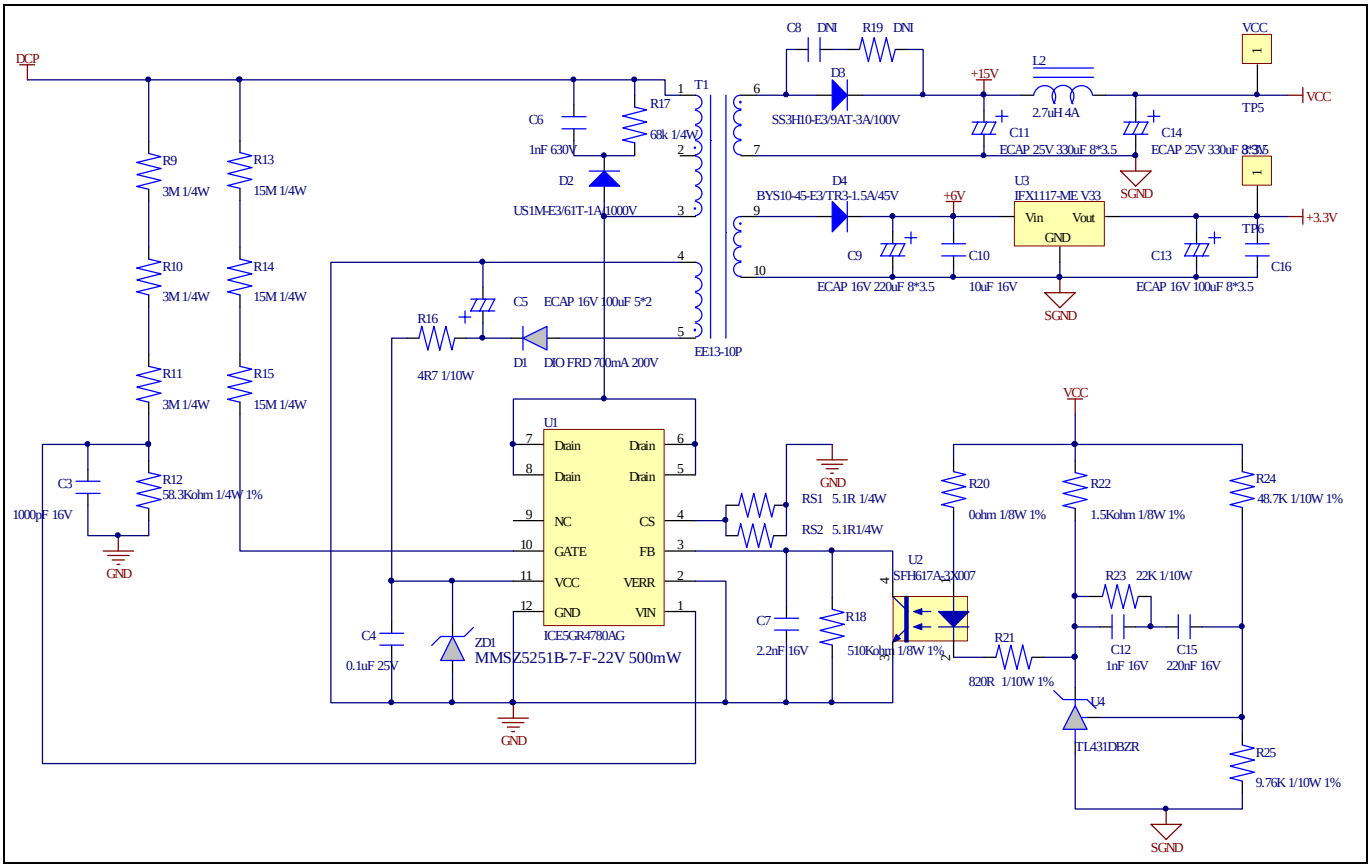

Figure 21 Power supply section of the EVAL-M1-CTF610N3 evaluation board

The linear voltage regulator IFX1117ME V33 generates 3.3 V from 6 V power supply V_{CC}. The 3.3 V power supply is used in the inverter external overcurrent comparator circuit and overtemperature hardware protection circuit. Both V_{CC} and 3.3 V are also present on the 20 pins iMOTION™ MADK-M1 interface connector J3 to power circuitry on the control board.

5.4 Schematics for EVAL-M1-CTF610N3

The AC linear setion schematic for EVAL-M1-CTF610N3 is provided in Figure 22.

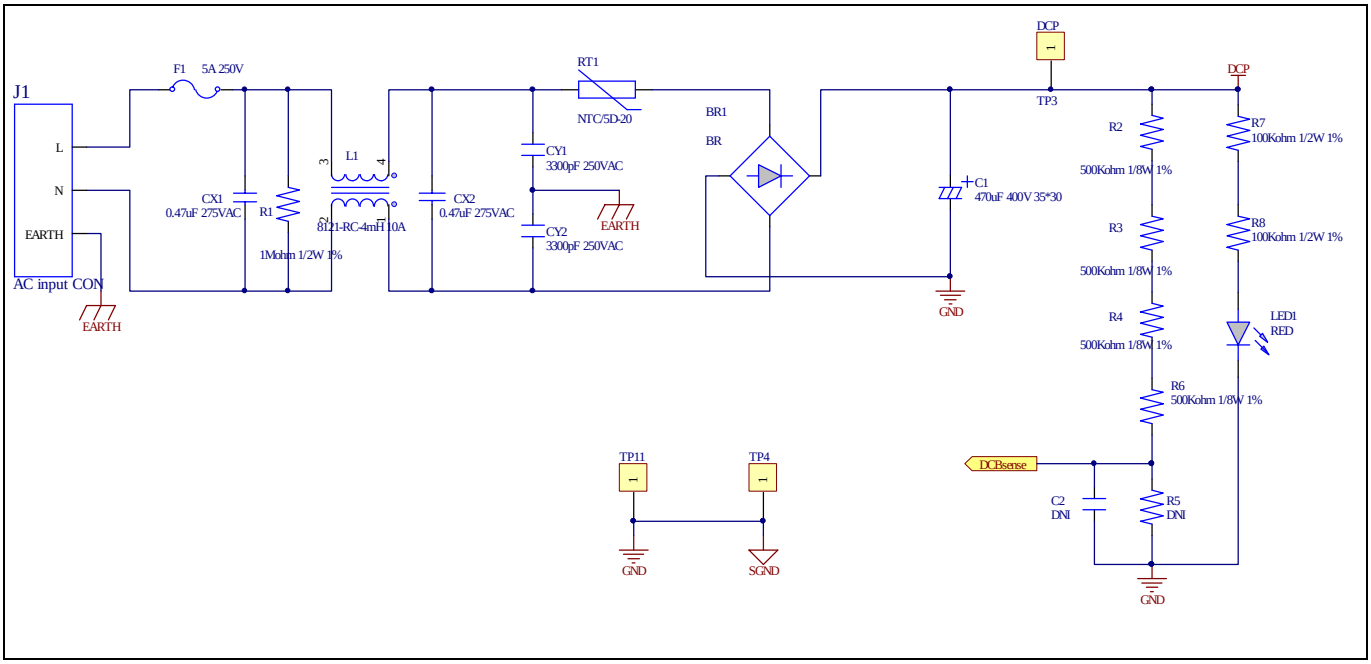

Figure 22 AC Linear Section Schematics for EVAL-M1-CTF610N3

The Inverter setion schematic for EVAL-M1-CTF610N3 is provided in Figure 23.

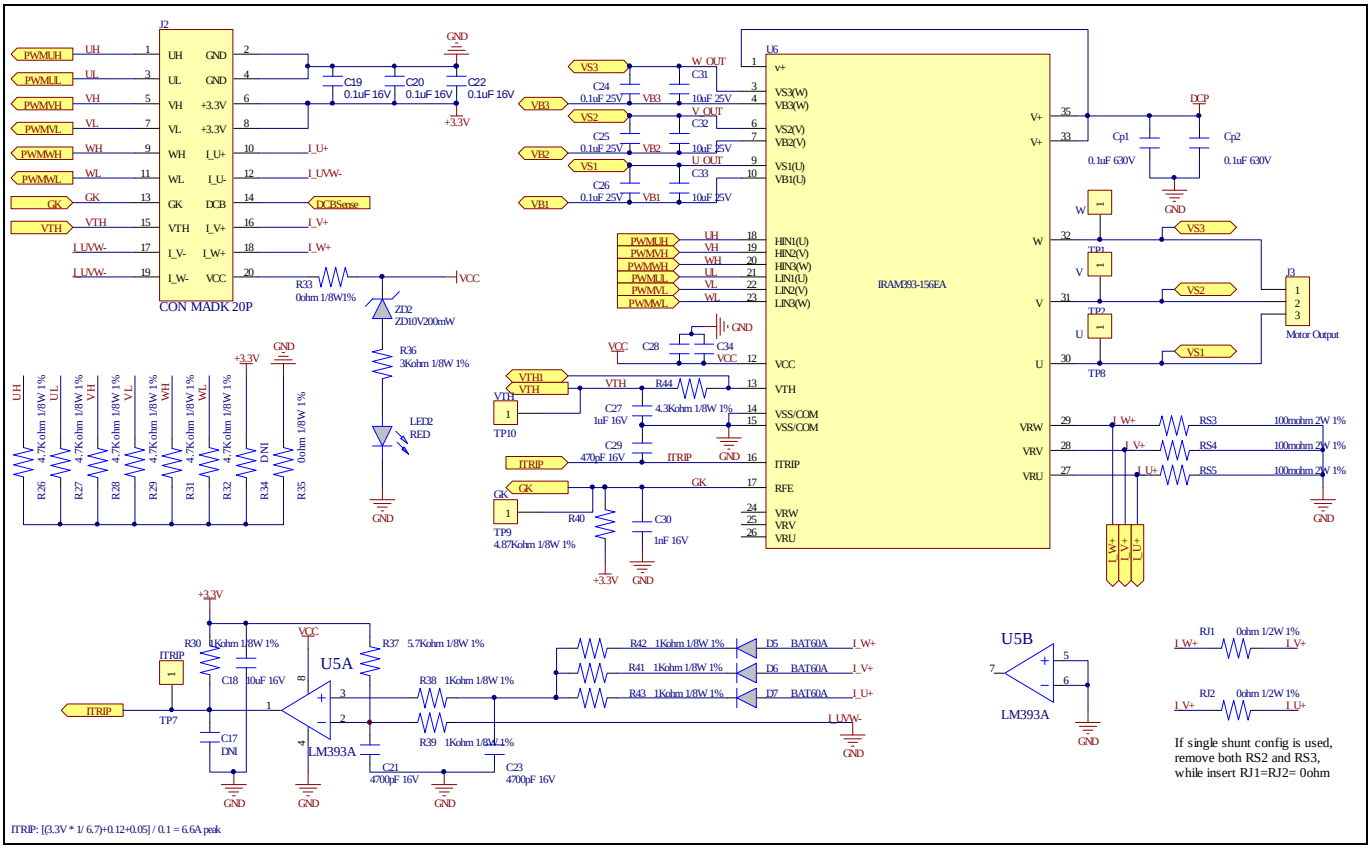

Figure 23 Inverter Section Schematics for EVAL-M1-CTF610N3

The Auxiliary Power Supply setion schematic for EVAL-M1-CTF610N3 is provided in Figure 24.

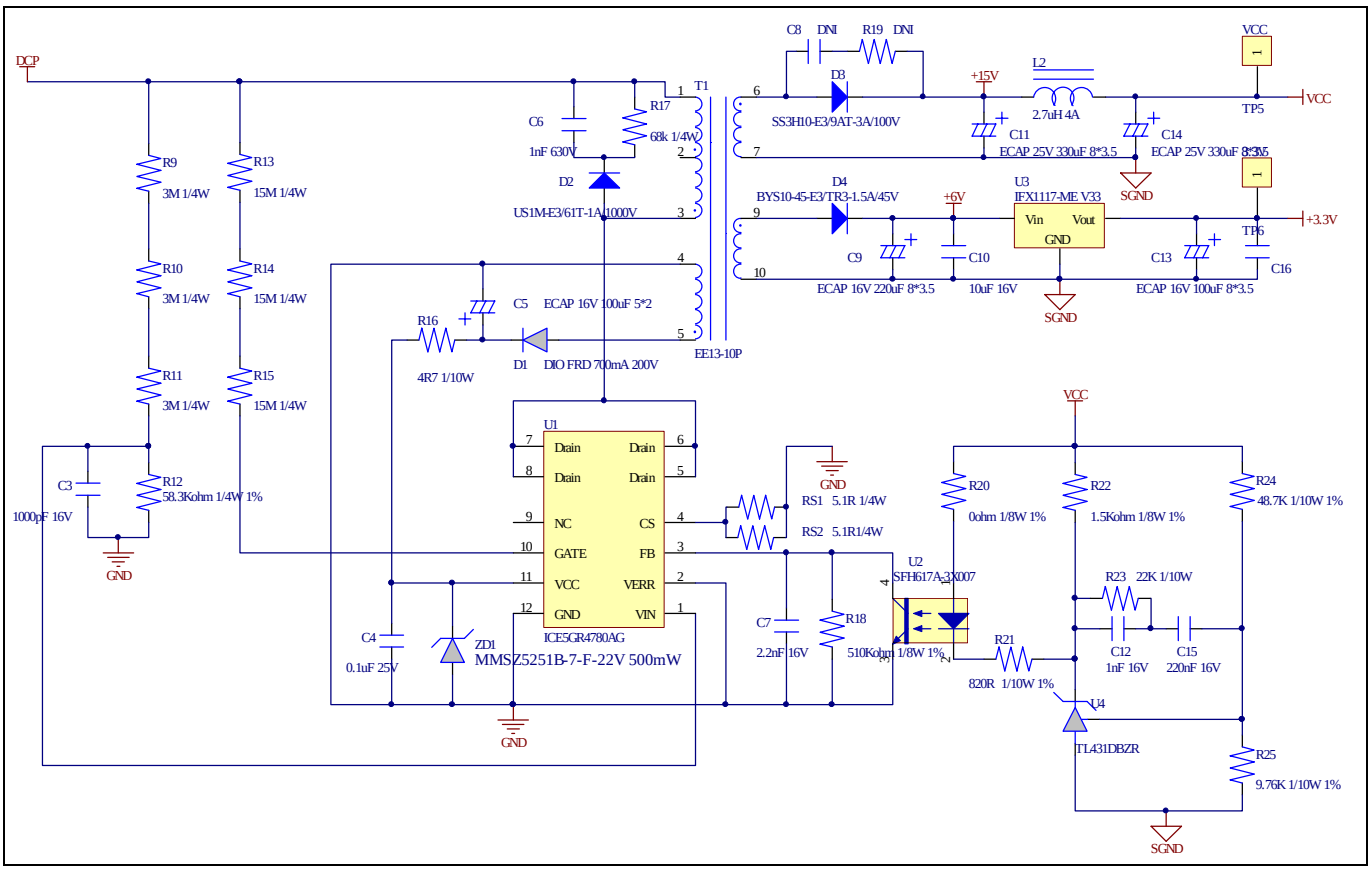

Figure 24 Auxiliary Power Supply Section Schematics for EVAL-M1-CTF610N3

5.5 PCB Layout for EVAL-M1-CTF610N3

The layout of this board can be used for different voltage or power classes. The PCB has two electrical layers with 35µm copper by default and its size is 120 mm × 120 mm. The PCB board thickness is 1.6mm. Get in contact with our technical support team to get more detailed information and the latest Gerber-files.

Figure 25 illustrates the top assembly print of the evaluation board.

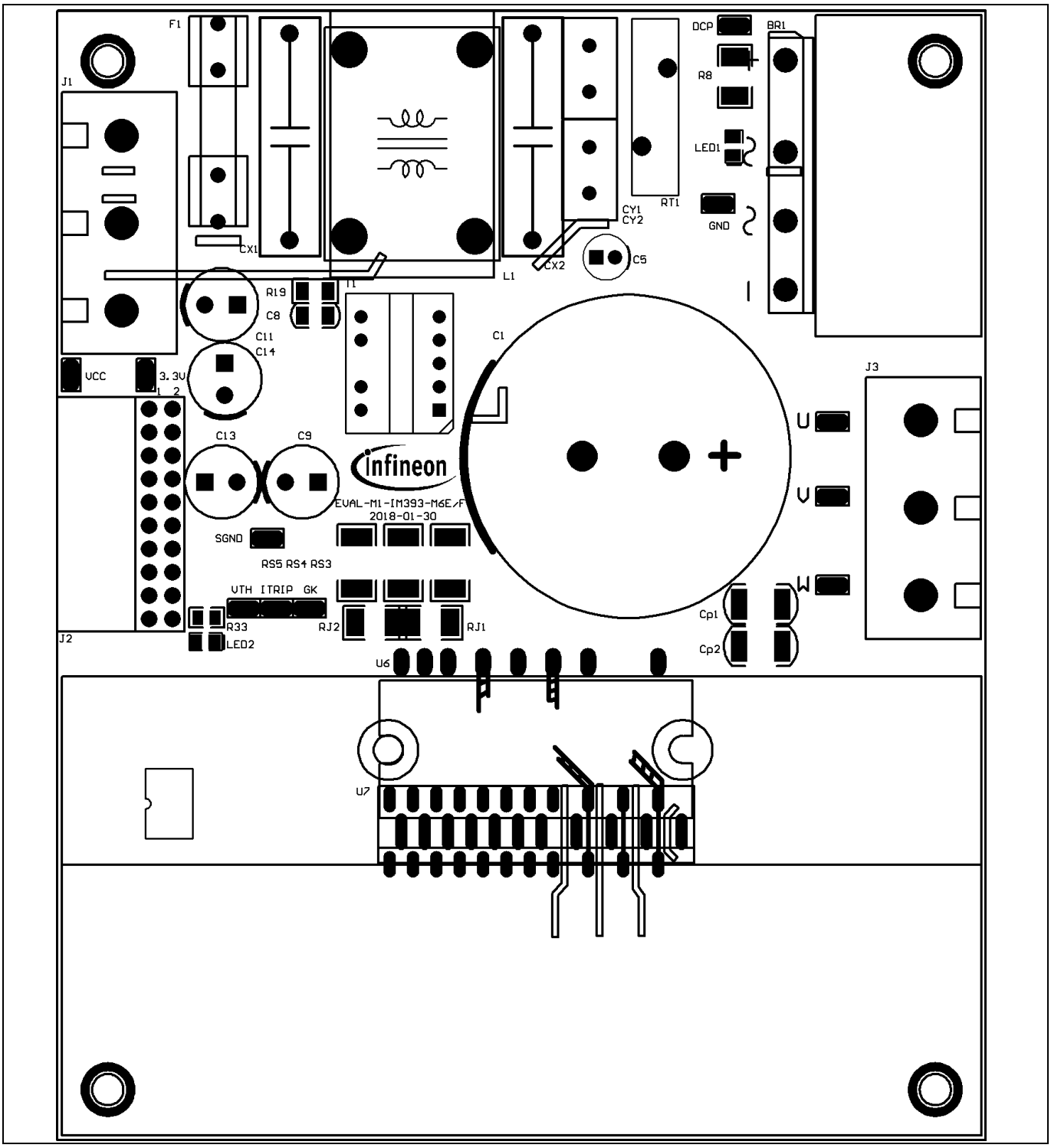

Figure 25 Top assembly print of the EVAL-M1-CTF610N3 evaluation board

Figure 26 depicts the bottom assembly print of the evaluation board.

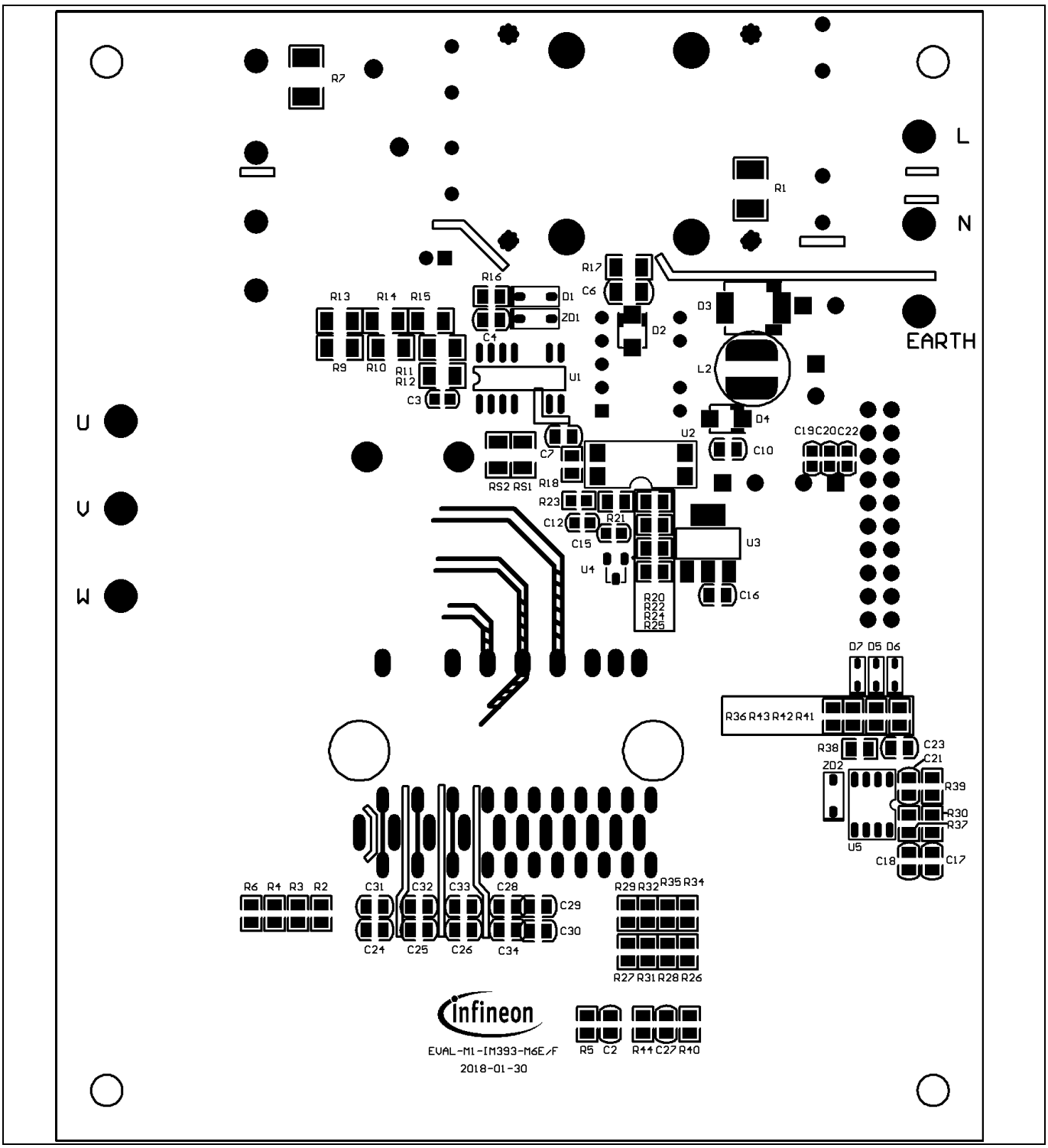

Figure 26 Bottom assembly print of the EVAL-M1-CTF610N3 evaluation board

The top layer routing of the PCB is provided in Figure 27.

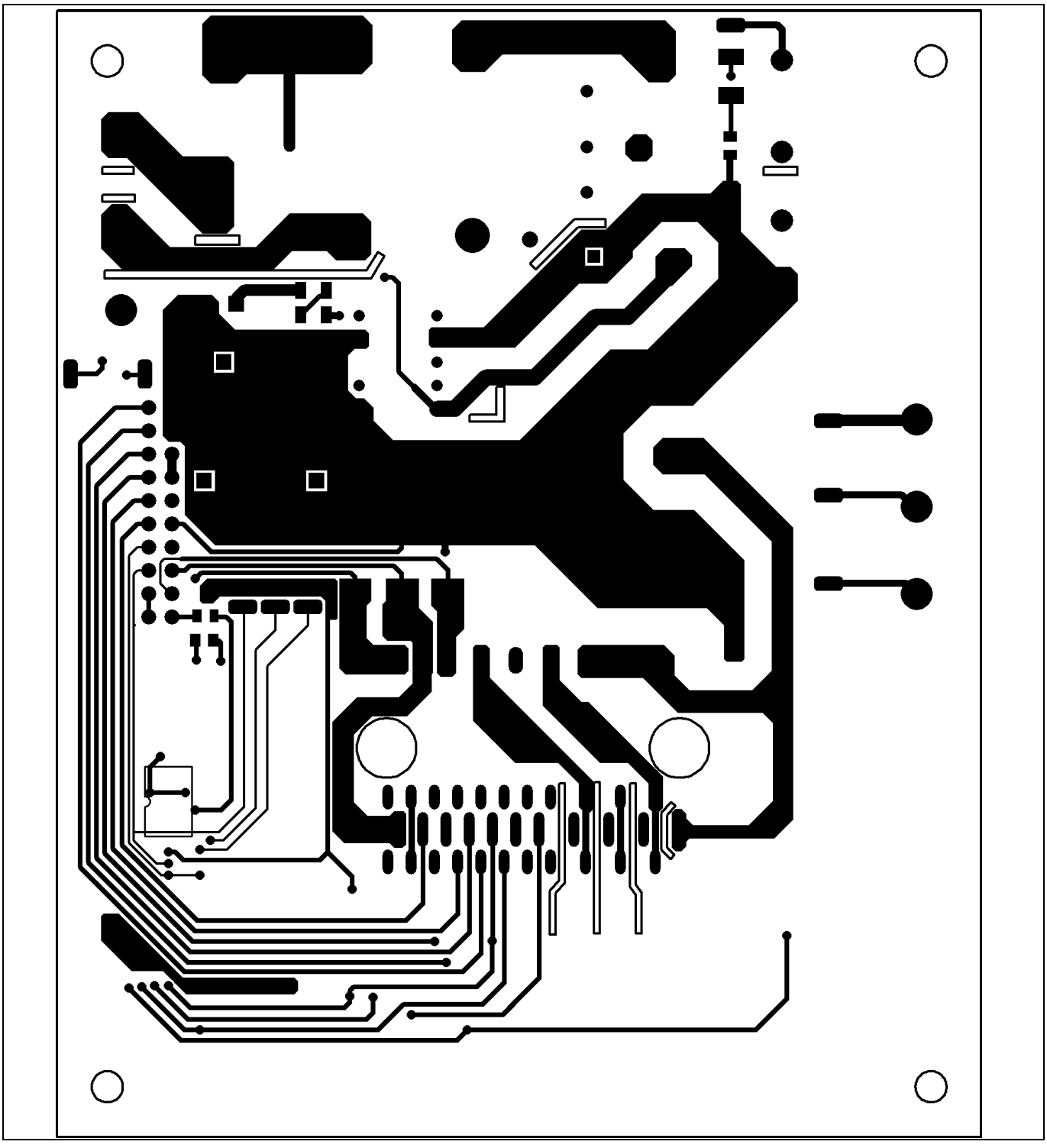

Figure 27 Top layer routing of the EVAL-M1-CTF610N3

Figure 28 illustrates the bottom layer routing of the PCB.

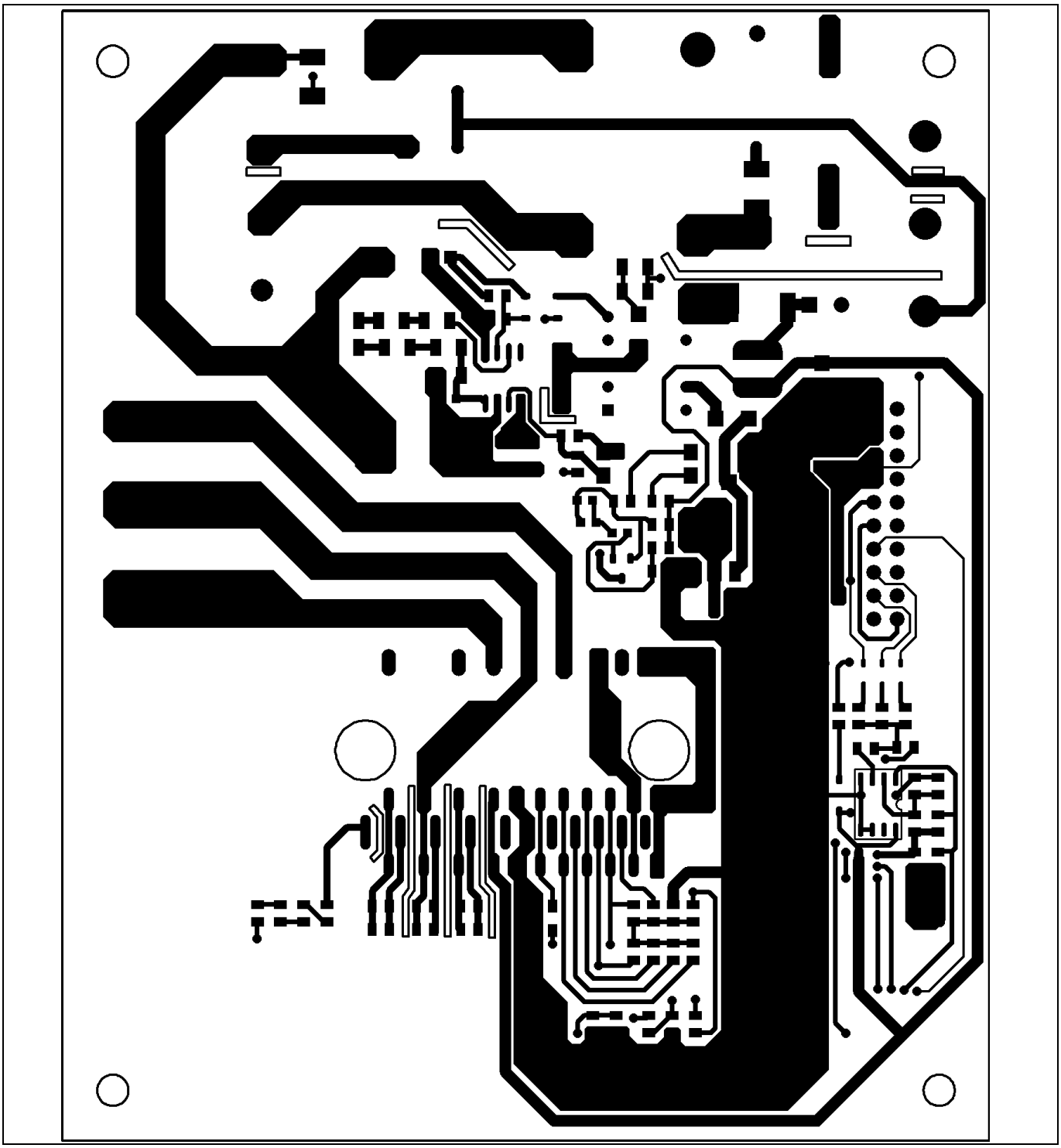

Figure 28 Bottom layer routing of the EVAL-M1-CTF610N3

Table 8 provides the complete bill of materials for the EVAL-M1-CTF610N3.

Table 8 Bill of materials

No.	Qty	Part description	Designator	Part number	Manufacturer
1	1	ECAP ALUM 470µF 400V RADIAL	C1	LLG2G471MELC30	Nichicon
2	2	CAP CER 470pF 166V 0805	C2, C17	885012207031	Wurth Electronics Inc.
3	2	CAP CER 1000pF 16V 0603	C3,C12	885012206034	Wurth Electronics Inc.
4	5	CAP CER 0.1µF 25V 0805	C4,C24,C2,C26, C28	885012207072	Wurth Electronics Inc.
5	1	ECAP ALUM 100µF 16V RADIAL	C5	860010372006	Wurth Electronics Inc.
6	1	CAP CER 1000pF 630V 1206	C6	885342208011	Wurth Electronics Inc.
7	1	CAP CER 2200pF 16V 0805	C7	885012207035	Wurth Electronics Inc.
8	1	CAP CER 4700pF 100V 1206	C8	885012208110	Wurth Electronics Inc.
9	1	ECAP ALUM 220µF 16V RADIAL	C9	860080374009	Wurth Electronics Inc.
10	3	CAP CER 10µF 16V 0805	C10,C16, C18	885012107014	Wurth Electronics Inc.
11	2	ECAP ALUM 330µF 25V RADIAL	C11, C14	860020474013	Wurth Electronics Inc.
12	1	CAP ALUM 100µF 16V RADIAL	C13	860240374004	Wurth Electronics Inc.
13	1	CAP CER 220nF 16V 0603	C15	885012206048	Wurth Electronics Inc.
14	3	CAP CER 0.1µF 16V 0603	C19,C20, C22	885012206046	Wurth Electronics Inc.
15	2	CAP CER 4700pF 16V 0805	C21,C23	885012207037	Wurth Electronics Inc.
16	1	CAP CER 1µF 16V 0805	C27	885012207051	Wurth Electronics Inc.
17	1	CAP CER 470pF 16V 0805	C29	885012207031	Wurth Electronics Inc.
18	1	CAP CER 1nF 16V X7R 0805	C30	885012207033	Wurth Electronics Inc.
19	4	CAP CER 10µF 25V 0805	C31,C32,C33,C34	TMK212BBJ106KG-T	Taiyo Yuden
20	2	CAP CER 0.1µF 630V X7R 1812	Cp1,Cp2	C4532X7R2J104K230KA	TDK Corporation
21	2	CAP FILM 0.47µF 10% 275VAC RADIAL	CX1,CX2	MKP275VAC474PF	JIMSON
22	2	CAP CER 3300pF 440VAC Y5U RADIAL	CY1, CY2	ECK-ATS332ME	Panasonic Electronic Components
23	1	RES SMD 1MΩ 5% 1/2W 2010	R1	RC2010JR-071ML	Yageo
24	4	RES SMD 500kΩ 1% 1/8W 0805	R2,R3,R4,R6	RC0805FR-07500KL	Yageo
25	2	RES SMD 100kΩ 5% 1/2W 2010	R7,R8	RC2010JR-07100KL	Yageo
26	3	RES SMD 3MΩ 5% 1/4W 1206	R9,R10,R11	RC1206JR-073ML	Yageo
27	1	RES SMD 62kΩ 5% 1/4W 1206	R12	RC1206FR-	Yageo

No.	Qty	Part description	Designator	Part number	Manufacturer
				0762KL	
28	3	RES SMD 15MΩ 5% 1/4W 1206	R13,R14,R15	RC1206JR-0715ML	Yageo
29	1	RES SMD 4.7Ω 1% 1/8W 0805	R16	RC0805FR-074R7L	Yageo
30	1	RES SMD 68kΩ 5% 1/4W 1206	R17	RC1206FR-0768KL	Yageo
31	1	RES SMD 510kΩ 1% 1/8W 0805	R18	RC0805FR-07510KL	Yageo
32	1	RES SMD 510Ω 5% 1/4W 1206	R19	RC1206JR-07510RL	Yageo
33	2	RES SMD 0 Ω 5% 1/8W 0805	R20,R35	RC0805JR-070RL	Yageo
34	1	RES SMD 820Ω 1% 1/8W 0805	R21	RC0805JR-07820RL	Yageo
35	1	RES SMD 1.5kΩ 1% 1/8W 0805	R22	RC0805JR-071K5L	Yageo
36	1	RES SMD 22kΩ 5% 1/8W 0805	R23	RC0805JR-0722KL	Yageo
37	1	RES SMD 48.7kΩ 1% 1/8W 0805	R24	RC0805FR-0748K7L	Yageo
38	1	RES SMD 9.76kΩ 1% 1/8W 0805	R25	RC0805FR-079K76L	Yageo
39	6	RES SMD 4.7kΩ 1% 1/8W 0805	R26,R27,R28,R29,R31,R32	RC0805FR-074K7L	Yageo
40	6	RES SMD 1kΩ 1% 1/8W 0805	R30,R38,R39,R41,R42,R43	RC0805FR-071KL	Yageo
41	1	RES SMD 0 Ω 5% 1/8W 0805	R33	RC0805JR-070RL	Yageo
42	1	RES SMD 3kΩ 1% 1/8W 0805	R36	RC0805FR-073KL	Yageo
43	1	RES SMD 5.7kΩ 1% 1/8W 0805	R37	RC0805FR-075K7L	Yageo
44	1	RES SMD 4.87kΩ 1% 1/8W 0805	R40	RC0805FR-074K87L	Yageo
45	1	RES SMD 4.3kΩ 1% 1/8W 0805	R44	RC0805FR-074K3L	Yageo
46	2	RES SMD 5.1Ω 1% 1/4W 1206	RS1, RS2	RC1206FR-075R1L	Yageo
47	3	RES SMD 0.1Ω 1% 2W 2512 wide	RS3, RS4,RS5	FC4L64R100FER	Ohmite
48	1	IC AUX Power PD-DSO-12	U1	ICE5GR4780AG	Infineon Technologies
49	1	IC OptoCoupler	U2	SFH617A-3X007	Vishay
50	1	IC REG LINEAR 3.3V 1A SOT223-4	U3	IFX1117MEV33H	Infineon Technologies

No.	Qty	Part description	Designator	Part number	Manufacturer
				TMA1	
51	1	IC TL431DBZR	U4	TL431DBZR	Texas Instruments
52	1	IC COMPARATOR VOLT SGL SOT	U5	LM393A	Texas Instruments
53	2	IC CIPOS Tiny Module	U6,U7	IM393-M6F/F	Infineon Technologies
54	1	DIODE ZENER 22V 500mW SOD123	ZD1	MMSZ525B-7-F	Wurth Electronics Inc.
55	1	DIODE ZENER 10V 500mW SOD123	ZD2	BZT52C10-7-F	Diodes Incorporated
56	1	DIODE FRD 200V 700mA SOD-123	D1	RF071MM2STR	ROHM
57	1	DIODE FRD 1000V 1A DO241AC	D2	US1M-E3/61T	Vishay
58	1	DIODE Schottky 100V 3A DO214AB	D3	SS3H10-E3/9AT	Vishay
59	1	DIODE Schottky 45V 1.5A DO214AC	D4	BYS10-45-E3/TR3	Vishay
60	3	Diode Standard 10V 3A Surface Mount SOD323	D5, D6, D7	BAT60A	Infineon Technologies
61	1	NTC thermistors for inrush	RT1	NTC5D-20	Yuanlindianzi
62	1	RECT BRIDGE GPP 800V 15A GBJ	BR1	GBJ1508-F	Diodes Incorporated
63	1	FUSE CERAMIC 8A 250V Φ6X30	F1	RO58 /BS1362-8A	Zhenghao Fuse Co.
64	1	Common Choke 8108-RC	L1	JWMILLER_8108	Bourns, Inc.
65	1	FIXED 2.7uH 4A SMD	L2	WE-PD2-M	Wurth Electronics Inc.
66	1	LED RED CLEAR 0805 SMD	LED1	LTST-C171KRKT	Lite-On Inc.
67	1	LED GREEN CLEAR 0805 SMD	LED2	LTST-C171GKT	Lite-On Inc.
67	2	CONN TERM BLOCK 3POS 9.52MM PCB	J1, J3	1714984	Phoenix Contact
68	1	CONN RCPT .100" 20 PS DL R/A GOLD	J2	SSW-110-02-S-D-RA	Samtec Inc.
69	1	Transformer EE13-10P	T1	EE13-10P	-

6 Reference

[1] Datasheet of Infineon CIPOS™ Tiny IPM IM393-M6F

[2] AN2018-02 EVAL-M1-101T User manual

[3] MCEWizard User Guide

[4] MCEDesigner User Guide

Note: All listed reference materials are available for download on Infineon's website www.infineon.com/.
All the iMOTION MADK evaluation board's User Manuals are available at www.infineon.com/MADK
All the CIPOS™ IPM's Datasheets and documents are available at www.infineon.com/IPM.

Revision history

Document version	Date of release	Description of changes
1.0	2018-09-04	First Release

Trademarks
All referenced product or service names and trademarks are the property of their respective owners.

Edition 2018-09-04

Published by

Infineon Technologies AG

81726 Munich, Germany

© 2018 Infineon Technologies AG. All Rights Reserved.

Do you have a question about this document?

Email: erratum@infineon.com

Document reference
AN2018-21

IMPORTANT NOTICE

The information contained in this application note is given as a hint for the implementation of the product only and shall in no event be regarded as a description or warranty of a certain functionality, condition or quality of the product. Before implementation of the product, the recipient of this application note must verify any function and other technical information given herein in the real application. Infineon Technologies hereby disclaims any and all warranties and liabilities of any kind (including without limitation warranties of non-infringement of intellectual property rights of any third party) with respect to any and all information given in this application note.

The data contained in this document is exclusively intended for technically trained staff. It is the responsibility of customer's technical departments to evaluate the suitability of the product for the intended application and the completeness of the product information given in this document with respect to such application.

For further information on the product, technology, delivery terms and conditions and prices please contact your nearest Infineon Technologies office (**www.infineon.com**).

WARNINGS

Due to technical requirements products may contain dangerous substances. For information on the types in question please contact your nearest Infineon Technologies office.

Except as otherwise explicitly approved by Infineon Technologies in a written document signed by authorized representatives of Infineon Technologies, Infineon Technologies' products may not be used in any applications where a failure of the product or any consequences of the use thereof can reasonably be expected to result in personal injury.