EVAL-M1-IM231-A User Manual

iMOTION™ Modular Application Design Kit

About this document

Scope and purpose

This application note provides an overview of the evaluation-board EVAL-M1-IM231-A including its main features, key data, pin assignments and mechanical dimensions.

The EVAL-M1-IM231-A board is a complete evaluation-board including IM231-L6-series 3-phase intelligent power modules (IPM) are designed for high-efficiency appliance motor drives such as air-conditioner fans and refrigerator compressors. In combination with either EVAL-M1-101T or EVAL-M1-099M it features and demonstrates Infineon's CIPOS™ Micro IPM technology for motor drive.

The evaluation board EVAL-M1-IM231-A for intelligent power modules (IPM) was developed to support customers during their first steps designing applications with CIPOS™ Micro power modules.

Intended audience

This application note is intended for all technical specialists working with the EVAL-M1-IM231-A board.

Important notice

Attention: ***The Evaluation Boards and Reference Boards as well as the information in this document are solely intended to support designers of applications in evaluating the use of products from Infineon Technologies for their intended applications.***

Environmental conditions have been considered in the design of the Evaluation Boards and Reference Boards provided by Infineon Technologies. The design of the Evaluation Boards and Reference Boards has been tested by Infineon Technologies only as described in this document. The design is not qualified in terms of safety requirements, manufacturing and operation over the entire operating temperature range or lifetime.

The Evaluation Boards and Reference Boards provided by Infineon Technologies are subject to functional testing only under typical load conditions. Evaluation Boards and Reference Boards are not subject to the same procedures as regular products regarding returned material analysis (RMA), process change notification (PCN) and product discontinuation (PD).

Evaluation Boards and Reference Boards are not commercialized products, and are solely intended for evaluation and testing purposes. In particular, they shall not be used for reliability testing or production. The Evaluation Boards and Reference Boards may therefore not comply with CE or similar standards (including but not limited to the EMC Directive 2004/EC/108 and the EMC Act) and may not fulfill other requirements of the country in which they are operated by the customer. The customer shall ensure that all Evaluation Boards and Reference Boards will be handled in a way which is compliant with the relevant requirements and standards of the country in which they are operated.

The Evaluation Boards and Reference Boards as well as the information provided in this

document are addressed only to qualified and skilled technical staff, for laboratory usage, and shall be used and managed according to the terms and conditions set forth in this document and in other related documentation supplied with the respective Evaluation Board or Reference Board.

It is the responsibility of the customer's technical departments to evaluate the suitability of the Evaluation Boards and Reference Boards for the intended application, and to evaluate the completeness and correctness of the information provided in this document with respect to such application.

The customer accepts that the Evaluation Boards and Reference Boards are not intended to be used in life-endangering applications such as medical, nuclear, military, life-critical or other applications, where failure of the Evaluation Boards and Reference Boards, or any results from the use thereof, can reasonably be expected to result in personal injury.

The Evaluation Boards and Reference Boards and any information in this document is provided "as is" and Infineon Technologies disclaims any warranties, express or implied, including but not limited to warranties of non-infringement of third party rights and implied warranties of fitness for any purpose, or for merchantability.

Infineon Technologies shall not be responsible for any damages resulting from the use of the Evaluation Boards and Reference Boards and/or from any information provided in this document. The customer is obliged to defend, indemnify and hold Infineon Technologies harmless from and against any claims or damages arising out of or resulting from any use thereof.

Infineon Technologies reserves the right to modify this document and/or any information provided herein at any time without further notice.

Safety precautions

Please note the following warnings regarding the hazards associated with development systems.

Table 1 Safety precautions

	**Warning:** The DC link potential of this board is up to 400 V_{DC}. When measuring voltage waveforms by oscilloscope, high voltage differential probes must be used. Failure to do so may result in personal injury or death.
	**Warning**: *The evaluation or reference board contains DC bus capacitors which take time to discharge after removal of the main supply. Before working on the drive system, wait five minutes for capacitors to discharge to safe voltage levels. Failure to do so may result in personal injury or death. Darkened display LEDs are not an indication that capacitors have discharged to safe voltage levels.*
	**Warning:** *The evaluation or reference board is connected to the grid input during testing. Hence, high-voltage differential probes must be used when measuring voltage waveforms by oscilloscope. Failure to do so may result in personal injury or death. Darkened display LEDs are not an indication that capacitors have discharged to safe voltage levels.*
	**Warning:** *Remove or disconnect power from the drive before you disconnect or reconnect wires, or perform maintenance work. Wait five minutes after removing power to discharge the bus capacitors. Do not attempt to service the drive until the bus capacitors have discharged to zero. Failure to do so may result in personal injury or death.*
	**Caution:** *The heat sink and device surfaces of the evaluation or reference board may become hot during testing. Hence, necessary precautions are required while handling the board. Failure to comply may cause injury.*
	**Caution:** *Only personnel familiar with the drive, power electronics and associated machinery should plan, install, commission and subsequently service the system. Failure to comply may result in personal injury and/or equipment damage.*
	**Caution:** *The evaluation or reference board contains parts and assemblies sensitive to electrostatic discharge (ESD). Electrostatic control precautions are required when installing, testing, servicing or repairing the assembly. Component damage may result if ESD control procedures are not followed. If you are not familiar with electrostatic control procedures, refer to the applicable ESD protection handbooks and guidelines.*
	**Caution:** *A drive that is incorrectly applied or installed can lead to component damage or reduction in product lifetime. Wiring or application errors such as undersizing the motor, supplying an incorrect or inadequate AC supply, or excessive ambient temperatures may result in system malfunction.*
	**Caution:** *The evaluation or reference board is shipped with packing materials that need to be removed prior to installation. Failure to remove all packing materials that are unnecessary for system installation may result in overheating or abnormal operating conditions.*

Table of Contents

About this document **1**
Important notice **1**
Safety precautions **3**
Table of Contents **4**
1 Introduction **5**
2 Main features **6**
2.1 EVAL-M1-IM231-A board specifications 7
3 Pin assignments **9**
4 Getting started with EVAL-M1-IM231-A **11**
4.1 Setting up the system 11
4.2 iMOTION™ development tools and software 13
4.2.1 MCEWizard setup overview 13
4.2.2 MCEDesigner setup overview 15
5 Schematics and layout **17**
5.1.1 DC bus sensing and MCEWizard configuration 17
5.1.2 Motor external current feedback configuration and calculation 18
5.1.3 Inverter overcurrent protection and motor Gatekill configuration 20
5.2 EMI filter and rectifier circuit 22
5.3 Inverter section using CIPOS™ Micro 23
5.4 Auxiliary power supply 24
5.5 Schematics for EVAL-M1-IM231-A 25
5.6 Layout 27
6 Bill of materials of EVAL-M1-IM231-A **31**
7 Reference **34**
Revision history **35**

1 Introduction

The EVAL-M1-IM231-A evaluation board is a part of the iMOTION™ modular application design kit for drives (iMOTION™ MADK).

The MADK-platform is intended to use various power stages with different control boards. These boards can easily be interfaced through the 20-pin iMOTION™ MADK-M1 interface connector.

This evaluation board is designed to give comprehensible solutions of a power stage based on the Infineon's CIPOS™ Micro intelligent power module (IPM). The board is equipped with all assembly groups for sensor less field oriented control (FOC). It provides a single-phase AC-connector, rectifier, DC-link and 3-phase output for power. It contains emitter-shunts for current sensing and a voltage divider for DC-link voltage measurement.

The EVAL-M1-IM231-A evaluation board is available from Infineon. The features of this board are described in the design feature chapter of this document, whereas the remaining paragraphs provide information to enable the customers to copy, modify and qualify the design for production according to their own specific requirements.

Environmental conditions were considered in the design of the EVAL-M1-IM231-A. The design was tested as described in this document but not qualified regarding safety requirements or manufacturing and operation over the whole operating temperature range or lifetime. The boards provided by Infineon are subject to functional testing only.

Evaluation boards are not subject to the same procedures as regular products regarding returned material analysis (RMA), process change notification (PCN) and product discontinuation (PD). Evaluation boards are intended to be used under laboratory conditions by specialists only.

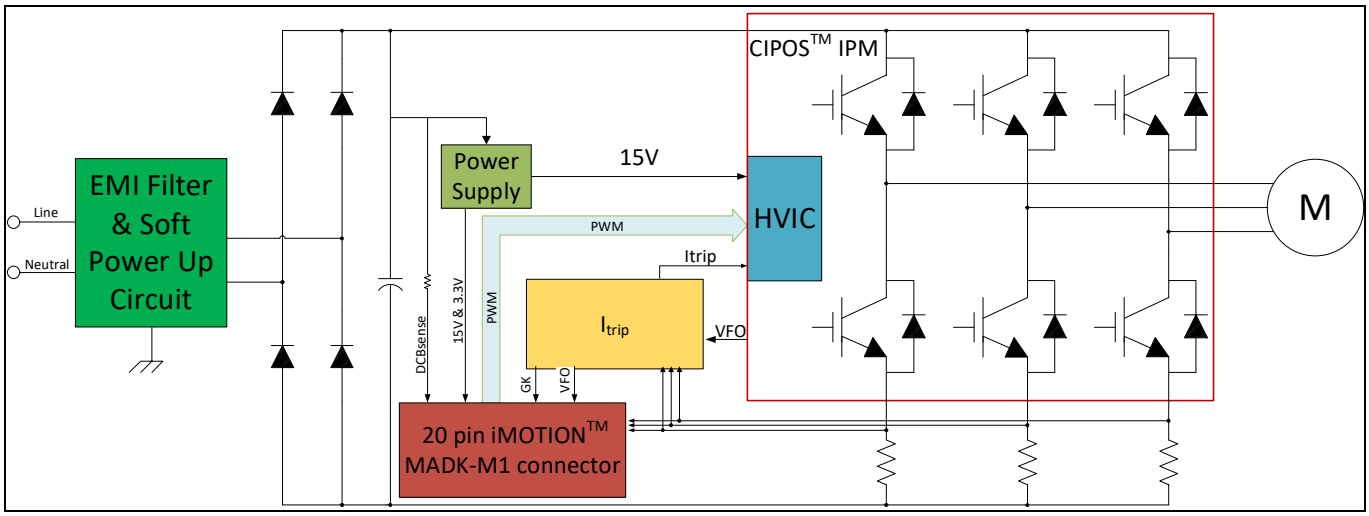

Figure 1 The Block Diagram of the EVAL-M1-IM231-A Evaluation-board

Figure 1 shows the evaluation board EVAL-M1-IM231-A. Although this board is compatible with on surface mount as well as through whole CIPOS™ Micro modules. This document explains the features and details of this board in combination with CIPOS™ Micro IM231-L6S1B and IM231-L6T2B. The only difference between these modules is the package type. IM231-L6S1B is SOP23 package. IM231-L6T2B is DIP23 package.

2 Main features

EVAL-M1-IM231-A is a complete evaluation board including a 3-phase IPM for motor drive application. The kit demonstrates Infineon's IPM technology for motor drives.

Main features of CIPOS™ Micro intelligent power module IM231-L6S1B and IM231-L6T2B include:

- 600 V 3-phase inverter including gate drivers & bootstrap function
- Low VCE(sat) TRENCHSTOP™ IGBT6
- Temperature monitor
- Accurate overcurrent shutdown (±5 %)
- Fault reporting and programmable fault clear
- Advanced input filter with shoot-through protection
- Optimized dv/dt for loss and EMI trade offs
- Open-emitter for single and leg-shunt current sensing
- 3.3 V logic compatible
- Isolation 1900 VRMS, 1min
-
- The evaluation board characteristics are:
- Nominal input voltage 220 V_{AC}
- Maximum 400 W motor power output
- On board EMI filter
- Current sensing for each phase configured by default
- Over current protection
- Sensing of DC-link voltage
- Thermistor output
- Fault diagnostic output
- Measurement test-points compatible to standard oscilloscope probes
- PCB is 100 x 100 mm and has two layers with 35 µm copper each
- RoHS compliant

2.1 EVAL-M1-IM231-A board specifications

Table 2 shows the important specifications of the evaluation board EVAL-M1-IM231-A.

Table 2 EVAL-M1-IM231-A board specifications

Parameters	Value	Conditions
Input		
Voltage	165 - 265 V_{rms}	Lower AC input, less motor power output
Input current	1.8 A_{rms}	Input 220 V_{AC}, T_a=25°C, IM231
Output		
Power (3 phases)	400 W	Input 220 V_{AC}, f_{PWM}=6 kHz, T_a=25°C, T_h=70°C
Current per leg	2.2 A_{rms}	Input 220 V_{AC}, f_{PWM}=6 kHz, T_a=25°C, Tc=100°C
DC bus		
Maximum DC bus voltage	400 V	
Minimum DC bus voltage	120 V	
Current feedback		
Current sensing devices RS3, RS4, RS5	100 mΩ	The default configuration uses three shunts in the emitter paths. To implement single shunt sensing, the board should be modified as follows: 1) RS3 and RS5 have to be removed 2) IU+,IV+,IW+ have to be connected 3) R35 has to be changed to 3.48 kΩ
Protections		
Output current trip level	6.07 A_{pk}	Configured by either changing shunt resistors RS3, RS4, RS5 or adapting comparator threshold changing resistor R35
On board power supply		
15 V	15 V±5%, Max 20 mA	Used for CIPOS™ Micro gate driver power
3.3 V	3.3 V±5%, Max 50 mA	Used for interface signals to the control board and alarm signals as I_{TRIP}, FLT/EN
PCB characteristics		
Material	FR4, 1.6 mm thickness, 2-layers, 35 µm copper thickness	
Dimensions	100 mm x 100 mm	
System environment		
Ambient temperature	25°C	NA

Figure 2 and Figure 3 hint out the functional groups of the EVAL-M1-IM231-A evaluation board.

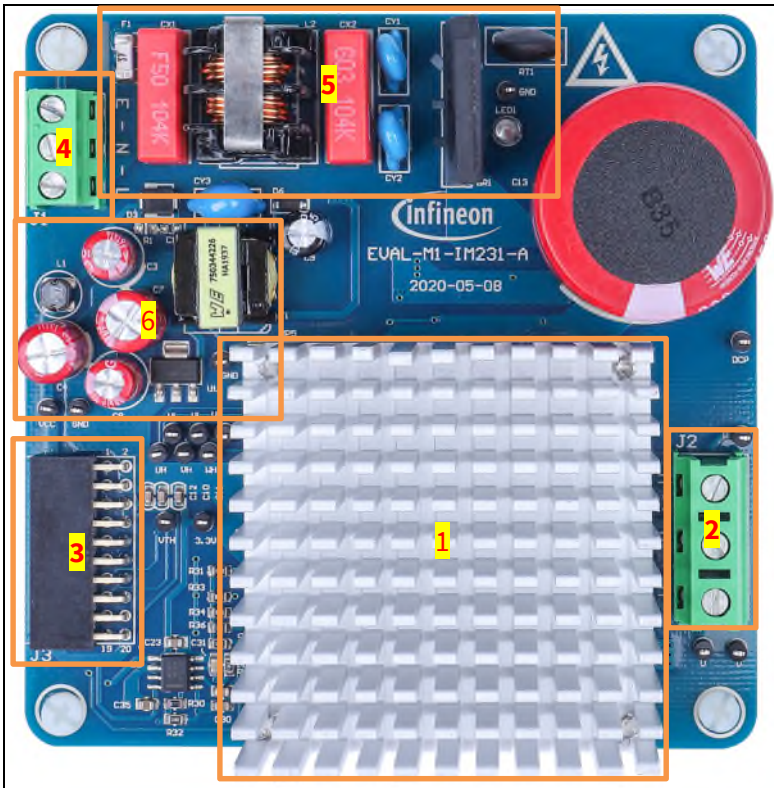

1. CIPOS™ Micro IPM and Heatsink.
2. Motor phase connector (J2)
3. J3-20 pin iMOTION™ MADK-M1 interface connector for controller board
4. AC line input connector (J1)
5. EMI filter and rectifier group
6. Auxiliary power supply

Figure 2 Functional groups of the EVAL-M1-IM231-A evaluation board's top side

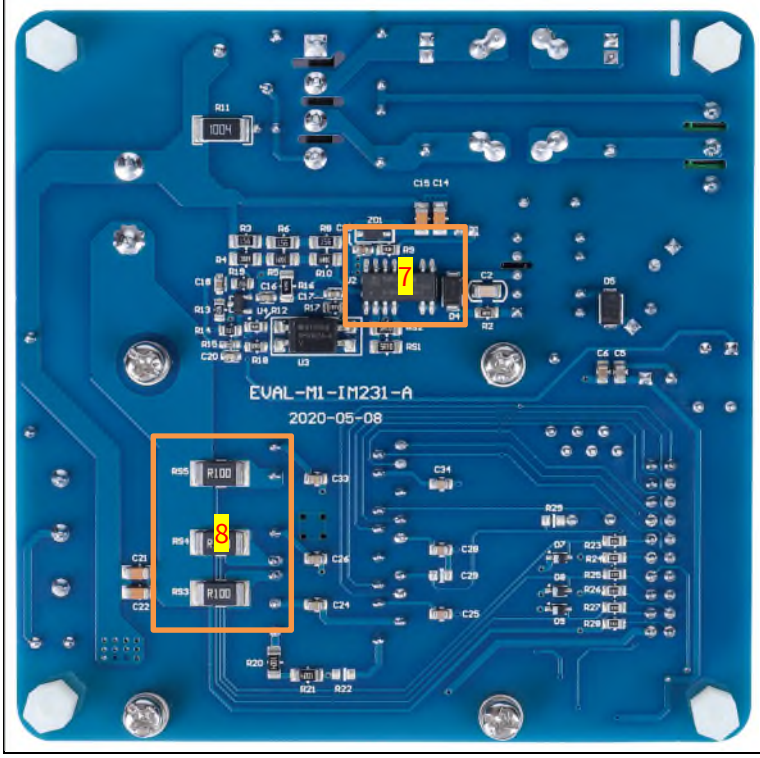

7. ICE5GR4780AG U2
8. Current sensing shunt resistor RS3, RS4, RS5

Figure 3 Functional groups of the EVAL-M1-IM231-A evaluation board's bottom side

3 Pin assignments

General information about the connectors of the EVAL-M1-IM231-A evaluation board is reported. Table 3 includes the details of the line connector J2-AC.

Table 3 J2- AC line connector

S. No.	Pin	Details
1	E	Earth ground
2	N	AC neutral input
3	L	AC line input

Table 4 denotes the details of the motor side connector J2.

Table 4 J3- Motor side connector

S. No.	Pin	Details
1	U	Connected to motor phase U
2	V	Connected to motor phase V
3	W	Connected to motor phase W

Pin assignments

Table 5 provides the pin assignments of the M1 20-pin interface connector J4. This connector is the interface to the controller board.

Table 5 J4 - 20 pin interface connector for controller board

Pin	Name	Connectors
1	PWMUH	3.3 V compatible logic input for high side gate driver-Phase U
2	GND	Ground
3	PWMUL	3.3 V compatible logic input for low side gate driver-Phase U
4	GND	Ground
5	PWMVH	3.3 V compatible logic input for high side gate driver-Phase V
6	+3.3 V	On board 3.3 V supply
7	PWMVL	3.3 V compatible logic input for low side gate driver-Phase V
8	+3.3 V	On board 3.3 V supply
9	PWMWH	3.3 V compatible logic input for high side gate driver-Phase W
10	IU+	Positive Current sense output
11	PWMWL	3.3 V compatible logic input for low side gate driver-Phase W
12	IU-	Negative current sense output or Ground
13	GK	Gate kill signal – active low when overcurrent is detected
14	DCBSENSE	DC bus positive voltage, scaled in 0-3.3 V range by a voltage divider
15	VTH	Thermistor Output
16	IV+	Positive Current sense output
17	IV-	Negative current sense output or Ground
18	IW+	Positive Current sense output
19	IW-	Negative current sense output or Ground
20	VCC	15 V Supply

4 Getting started with EVAL-M1-IM231-A

In order to run the motor system, a combination of the iMOTION™ MADK power board EVAL-M1-IM231-A and the matching MADK control board (with M1 connector, EVAL-M1-101T for example in this chapter) is required. The iMOTION™ software tools MCEDesigner and MCEWizard are also required in order to initially setup the system, as well as to control and fine-tune the system performance to match users exact needs. This chapter provides more details on setting up the system and getting started with iMOTION™ MADK development platform.

4.1 Setting up the system

After downloading and installing the iMOTION™ PC tools (MCEWizard and MCEDesigner), following steps need to be executed in order to run the motor. Refer to chapters 4.2.1 and 4.2.2 as well as MCEWizard and MCEDesigner documentation for more information.

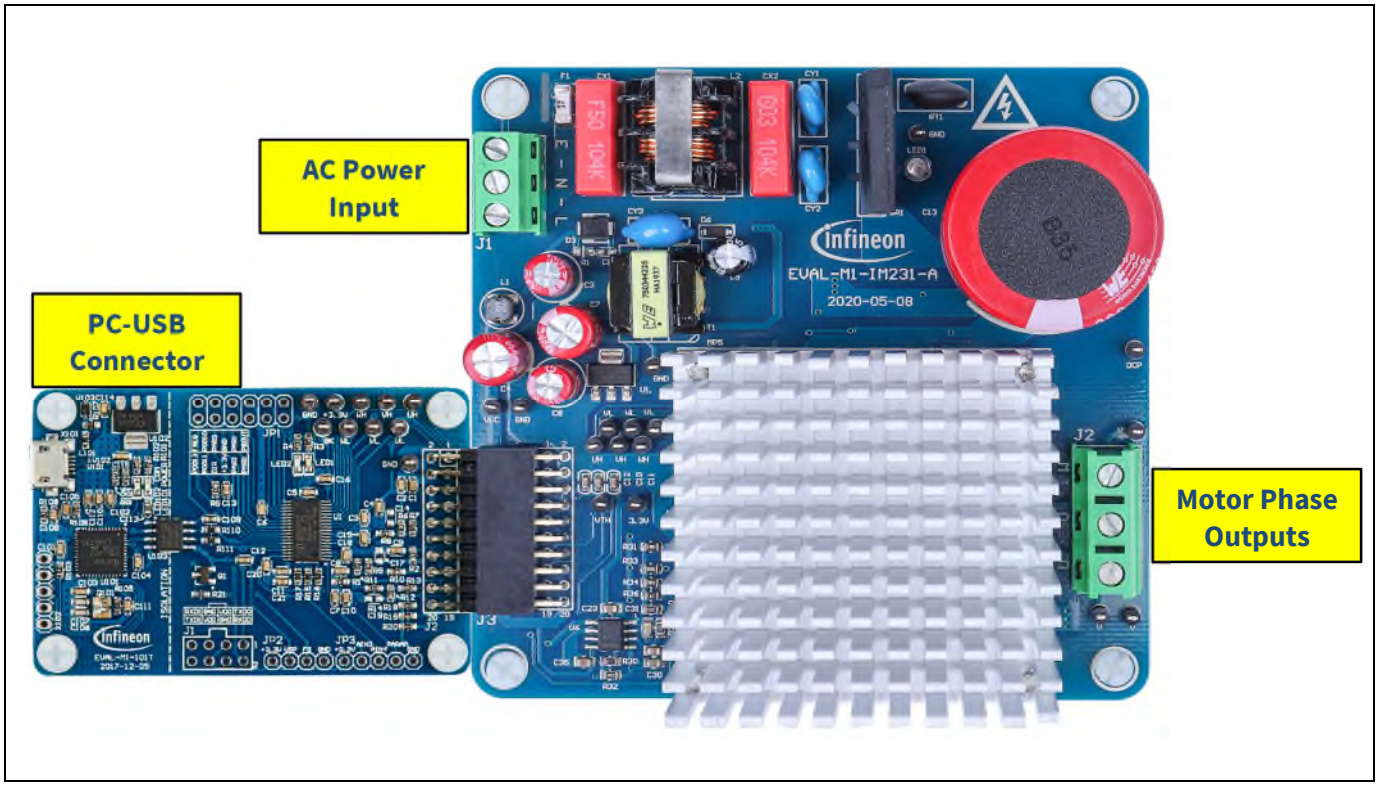

Figure 4 System connection example using EVAL-M1-101T and EVAL-M1-IM231-A

1. Get the latest ”IMC101T-T038 MCE Software Package” available on www.infineon.com/imotion-software web page.
2. Connect PC-USB connector on the on-board-debugger to the PC via USB cable.
3. Connect EVAL-M1-101T’s M1 20-pin interface connector (J2) to power board (For example EVAL-M1-IM231-A, see Figure 4).
4. Use MCEWizard to enter the target motor’s system and operating parameters, as well as evaluation board’s hardware parameters, which will then be used to calculate controller’s digital parameter set representing complete motor drive system. First click “Calculate” button on the “Verify & Save Page” and then save the drive parameter set into your project directory by clicking “Export to Designer file (.txt)”. Saved drive system parameter file will be later used by the MCEDesigner. Refer to chapter 4.2.1or MCEWizard user guide for more details.
5. Connect motor phase outputs to the motor.
6. Connect AC power to power input connector and power on system.

7. Start MCEDesigner tool and open MCEDesigner default configuration file (.irc) for IMC101T-T038 controller (IMC101T_Vxxx.irc) by clicking “File” > “Open”. IMC101T_Vxxx.irc file is included in ”IMC101T-T038 MCE Software Package” downloaded in step 1.
8. MCEDesigner should automatically connect to the EVAL-M1-101T control board using default COM port (Indicated by green circle next to “COMx Up” status in the bottom frame of the MCEDesigner GUI). If it cannot establish the connection, change COM port by doing following steps: (“System” window active) > Preferences > Connection > Connect using (Chose one of the other available COM ports from the drop-down menu).
9. Use following steps to program the system parameters into the internal SRAM of iMOTION™ IC: Click “Tools” > “Programmer” and select “Program Parameters”. Browse and select the system drive parameters .txt file created in step 4. See chapter MCEDesigner setup overview 4.2.2 for more details.
10. Start the motor by clicking the green traffic light button in the control bar.

4.2 iMOTION™ development tools and software

The iMOTION™ development tool installers for MCEDesigner and MCEWizard are available for download via Infineon iMOTION™ website (http://www.infineon.com/imotion-software). All supported tools and software variants are listed there. Please visit this page periodically to check for tool/software updates.

Isolated on-board debugger provides the USB to UART bridge between the PC and the target iMOTION™ device with 1kV DC galvanic isolation between the motor drive system (hot side) and the PC/debugger (cold) side. On-board debugger uses the SEGGER J-Link driver for UART communication with IMC101T-T038. J-Link driver will be installed during the MCEDesigner installation. In case the driver is not installed properly, please go to SEGGER J-Link website to download and install the latest J-Link "Software and Documentation pack for Windows".

4.2.1 MCEWizard setup overview

After installing the MCEWizard, the shortcut for MCEWizard appears on the Windows desktop. Double click the shortcut to open the MCEWizard and configure the parameters for evaluation boards or motor. Figure 5 shows the "Welcome Page" for MCEWizard, where the MADK control board or power board can be selected through the pull-down list. Infineon keeps releasing new MADK controller and power boards. Therefore, it could happen that some of the newest power boards are not pre-configured in the MCEWizard tool and cannot be selected through the pull-down menu. In that case, the user should select any other power board (as similar as possible) and follow the MCEWizard setup steps by entering the parameter values which are specific to the chosen board. Make sure both "I have modified the circuit board" and "Enable advanced question" checkmarks are selected. Please refer to the Application Note of the corresponding power board for additional information.

After selecting the MADK control and the power board, start the MCEWizard system setup procedure by clicking the "Next" button in the right bottom corner as shown in Figure 5.

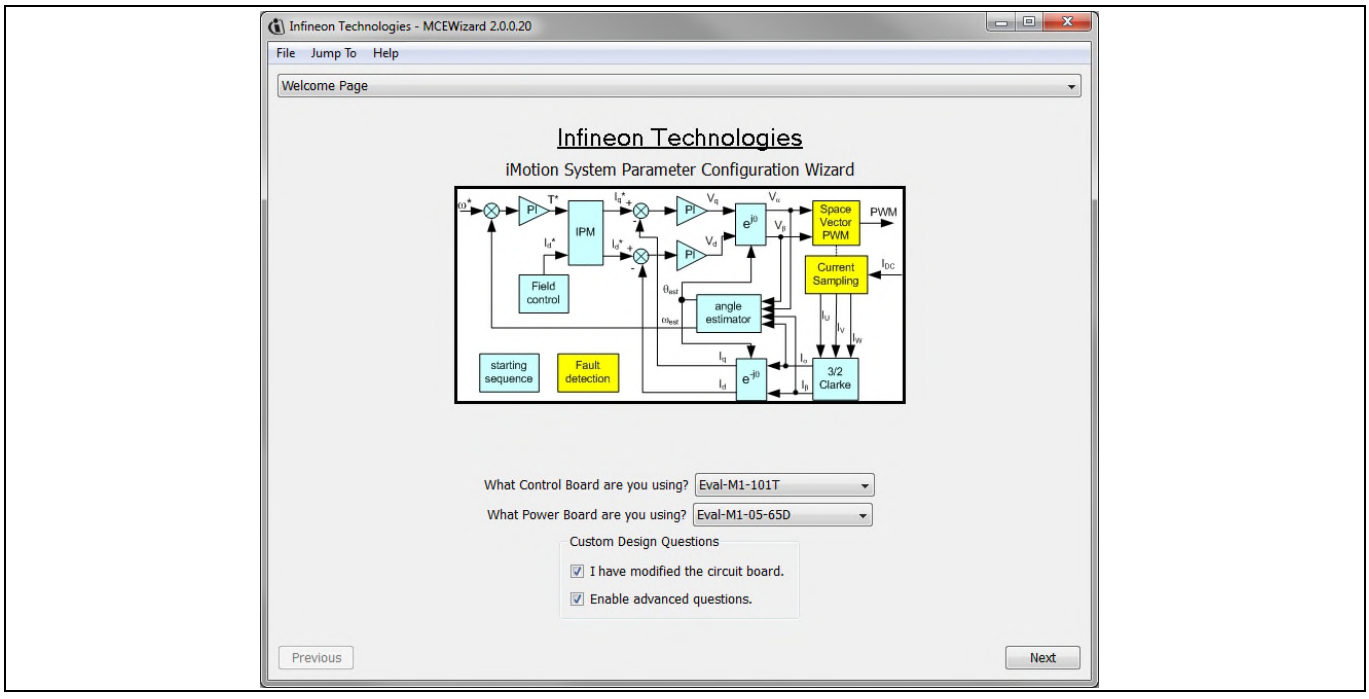

Figure 5 Welcome page of MCEWizard

iMOTION™ MADK system enables users to easily test different combination of control and power board with their motors. User should be familiar with the system level parameters which are related to the motor used. There is a very limited number of parameters which are specific to the control board or power board hardware.

Table 6 provides the MCEWizard setup overview for hardware related parameters specific to EVAL-M1-IM231-A power board. Similar tables will be available in each control board's application note. Combination of this table and the corresponding table of the control board provides enough information to setup the MADK-based motor drive system in shortest time.

Table 6 MCEWizard setup overview table

Page	Parameter	Value	Comment
Welcome Page	Control Board selecting	EVAL-M1-101T for example	
Welcome Page	Power Board selecting	EVAL-M1-IM231-A	If no, select similar power board to modify
Options Page	Motor 1 Shunt Configuration	Leg shunt	
Question 3	Controller Supply Voltage	+3.3 V	VDD is 3.3 V by default
Question 19	Max DC Bus Voltage	400 V	
Question 23	DC Bus Sensing High Resistor	2000 kΩ	
Question 24	DC Bus Sensing Low Resistor	Refer to the control board user manual	
Question 54	NTC Temperature Shutdown value	Refer to the control board user manual	
Question 63	GateSense Low-Side Devices	High is true	
Question 64	GateSense High-Side Devices	High is true	
Question 69	Motor 1 Current Input	Calculated in the corresponding Section in control board user manual	

After all the MCEWizard questions are answered, the "Verify & Save Page" will be shown as in Figure 6.

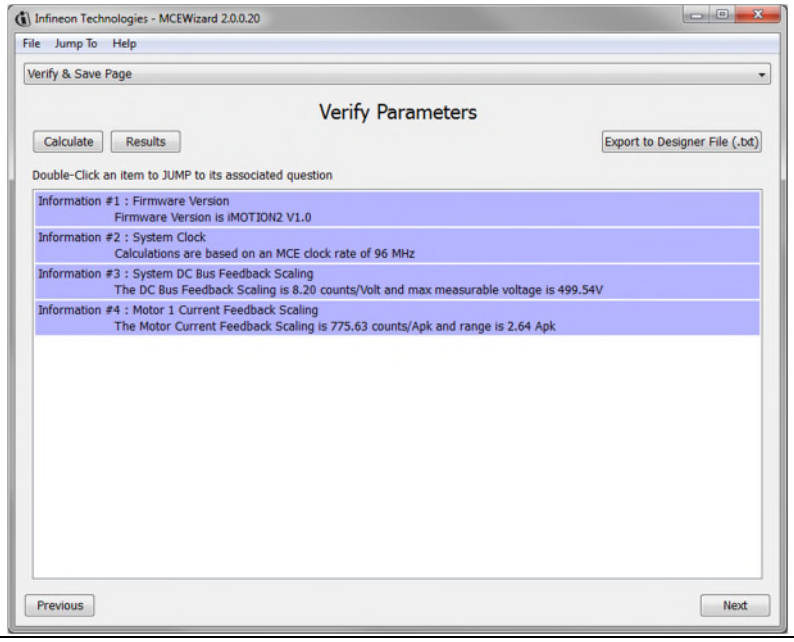

Figure 6 Verify and save page for MCEWizard

Click "Calculate" button and "Export to Designer File (.txt)" button to save the parameter file which will be used by the MCEDesigner in the next steps.

4.2.2 MCEDesigner setup overview

After installing MCEDesigner installer, there is a shortcut for MCEDesigner on windows desktop. Double click the shortcut to open MCEDesigner and then open “IMC101T_xx.irc” file as shown in Figure 7.

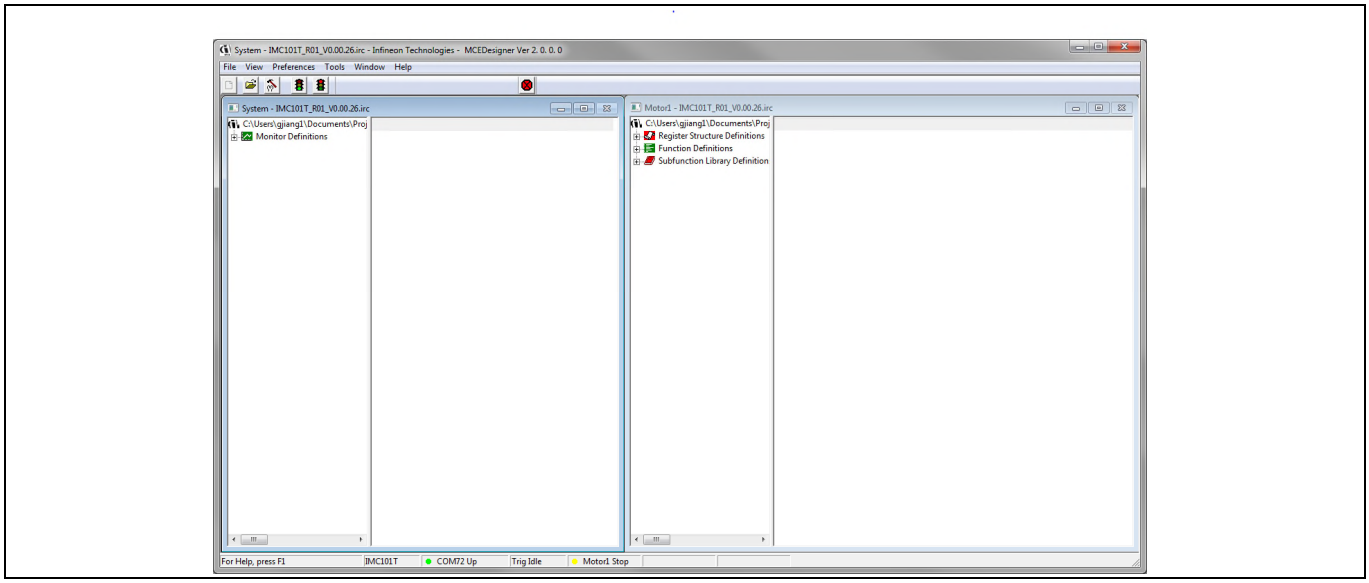

Figure 7 MCEDesigner’s main display for EVAL-M1-101T

To program drive system parameter file into IMC101T-T038, please click “Tools” menu and select “Programmer” in the pull down list. The pop-up window “Program IMC controller” will show up as in Figure 8. Click on the “Program Parameters” radio button (this is the default option), and then select the drive system parameter file created using MCEWizard by clicking on “Browse”. Finally, click on the “Start” button to program the parameter file into the IMC101T-T038 IC.

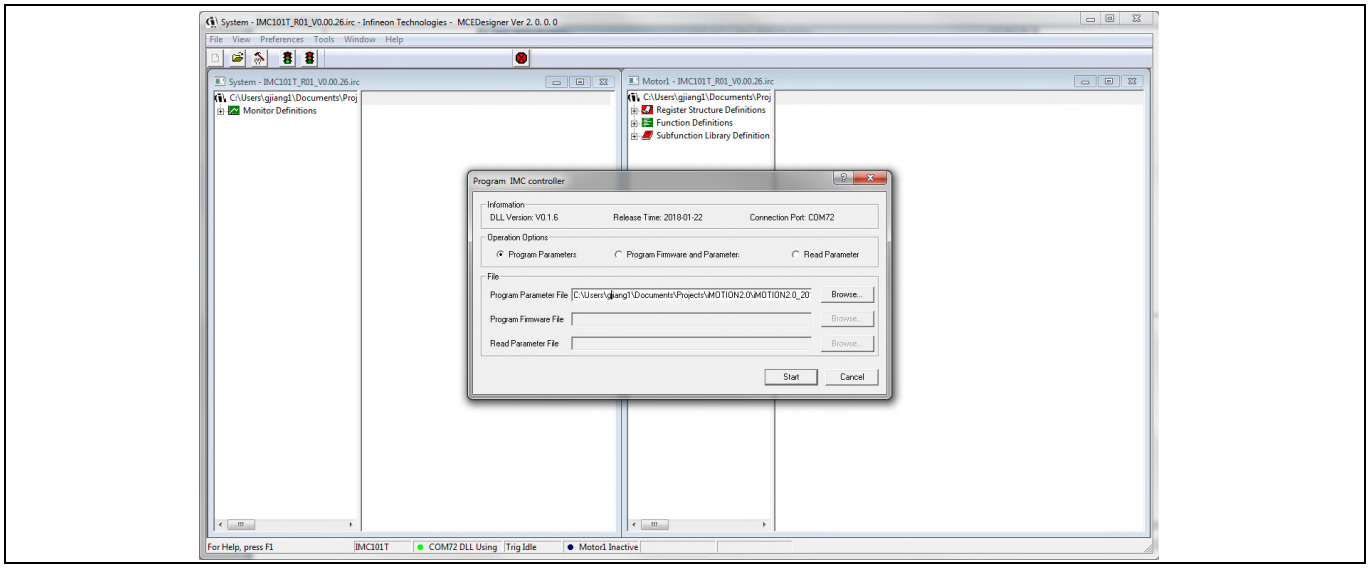

Figure 8 “Program IMC controller” pop-up window

After drive system parameter file has been programmed into IMC101 controller, and the motor drive system is powered, the MCEDesigner can be used to start/stop the motor, display motor current traces, change the motor

speed, modify drive parameters and many other functions. Please refer to the MCEDesigner documentation for more details.

Note: On-board debugger portion of EVAL-M1-101T is galvanically isolated from the controller portion and the attached power board. In order to program the parameters or firmware to the IMC101T-T038 controller, the 3.3 V DC voltage needs to be supplied to the controller portion of the EVAL-M1-101T. This voltage can either be supplied by the power board (MADK power boards are designed to supply the 3.3 V to the control board through M1 connector) or by feeding the 3.3 V DC voltage to the control board through some of the available 3.3 V access/test points if the power board is not attached to the EVAL-M1-101T control board.

To program new firmware and drive system parameter into IMC101T-T038, please click “Tools” menu and select “Programmer” in the pull down list. The pop-up window “Program IMC controller” will show up as in Figure 9. Click on the “Program Firmware and Parameter” radio button, and select the drive system parameter file created using MCEWizard by clicking on the “Browse” button on the row of “Program Parameter File”, and then select the firmware file by clicking on the “Browse” button on the row of “Program Firmware File”. Finally, click on the “Start” button to program the parameter file into the IMC101T-T038 IC.

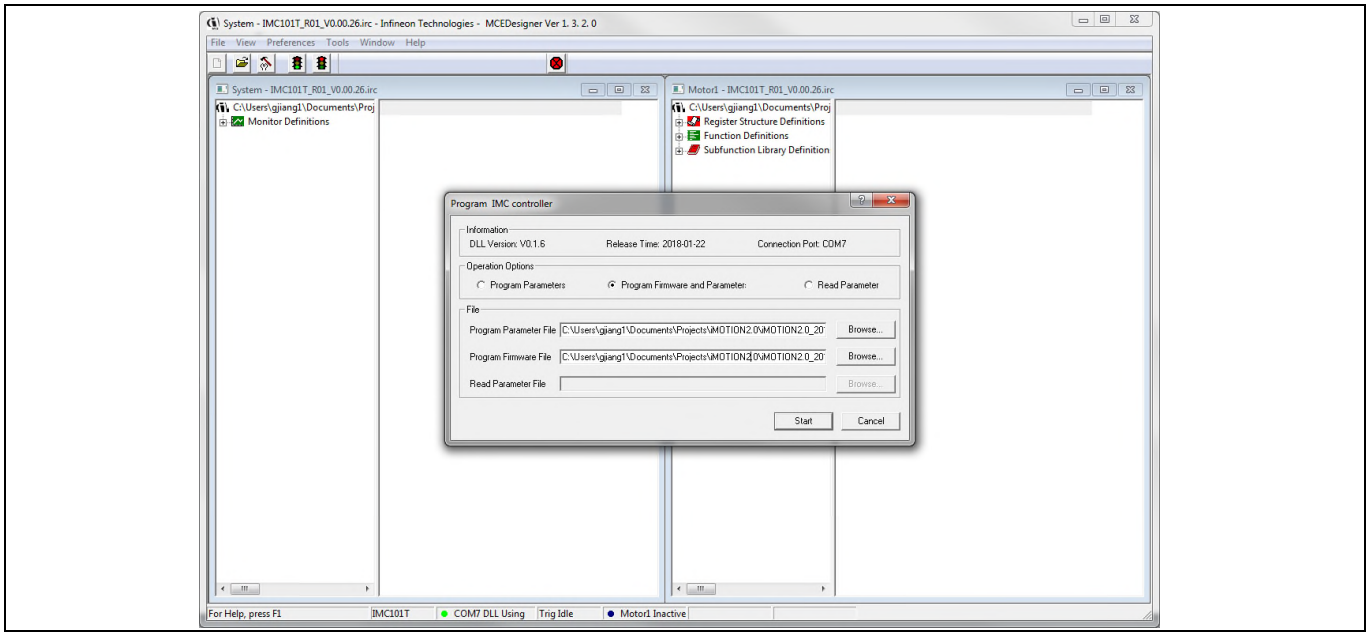

Figure 9 Program firmware and parameter in “Program IMC Controller” pop-up window

All the latest firmware files for different types of iMOTION™ motor control ICs are available for download via Infineon iMOTION™ website (http://www.infineon.com/imotion-software).

5 Schematics and layout

To meet individual customer requirements and make the EVAL-M1-IM231-A evaluation board a basis for development or modification, all necessary technical data like schematics, layout and components are included in this chapter.

5.1.1 DC bus sensing and MCEWizard configuration

Pin 14 of connector J4 provides access to the DC-link voltage. Three possible feedback cases are associated with this pin. Figure 10 provides the DC bus sense resistor details.

By default, R22 is not mounted on EVAL-M1-IM231-A. There must be a pull-down resistor mounted on the corresponding controller board.

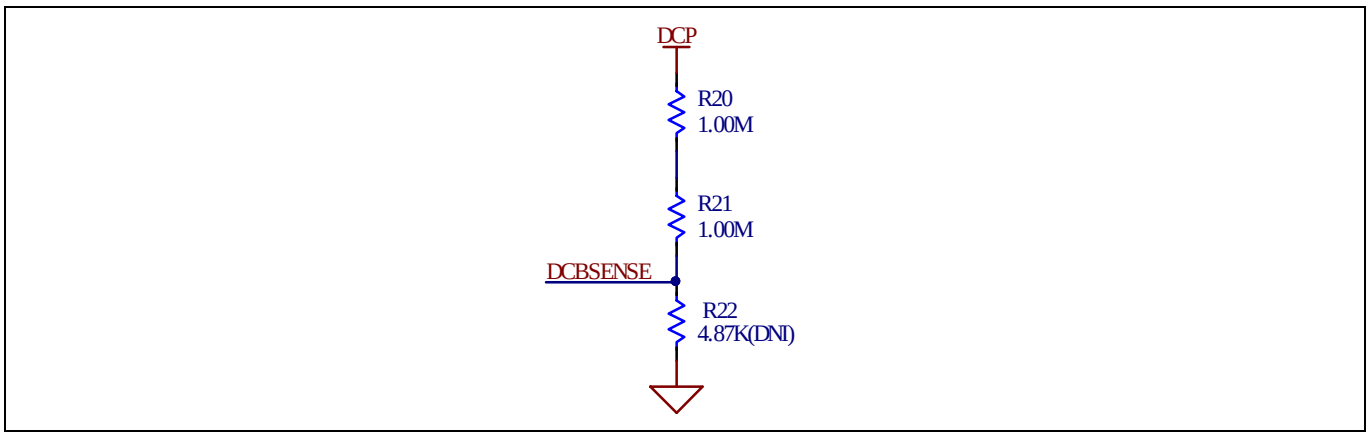

Figure 10 DC bus sense resistor on EVAL-M1-IM231-A evaluation board

If a pull down resistor of 4.87 kΩ referred to ground is inserted either on the EVAL-M1-IM231-A evaluation board or on the control board, the DCBSENSE voltage results in the range of 0 to 3.3 V on the pin reflecting a DC bus voltage range of 0 to 400 V.

If a pull down resistor of 4.87 kΩis inserted on both, EVAL-M1-IM231-A evaluation board and on the control card, the DCBSENSE results scale to 0-1.65 V. No safety issue occurs.

The high side resistors R20 and R21 for the DC bus sensing resistor divider on the controller board EVAL-M1-IM231-A are 2000 kΩ, and should be configured in MCEWizard as shown in Figure 11. For the low side resistor value, please refer to the user manual of the corresponding control board.

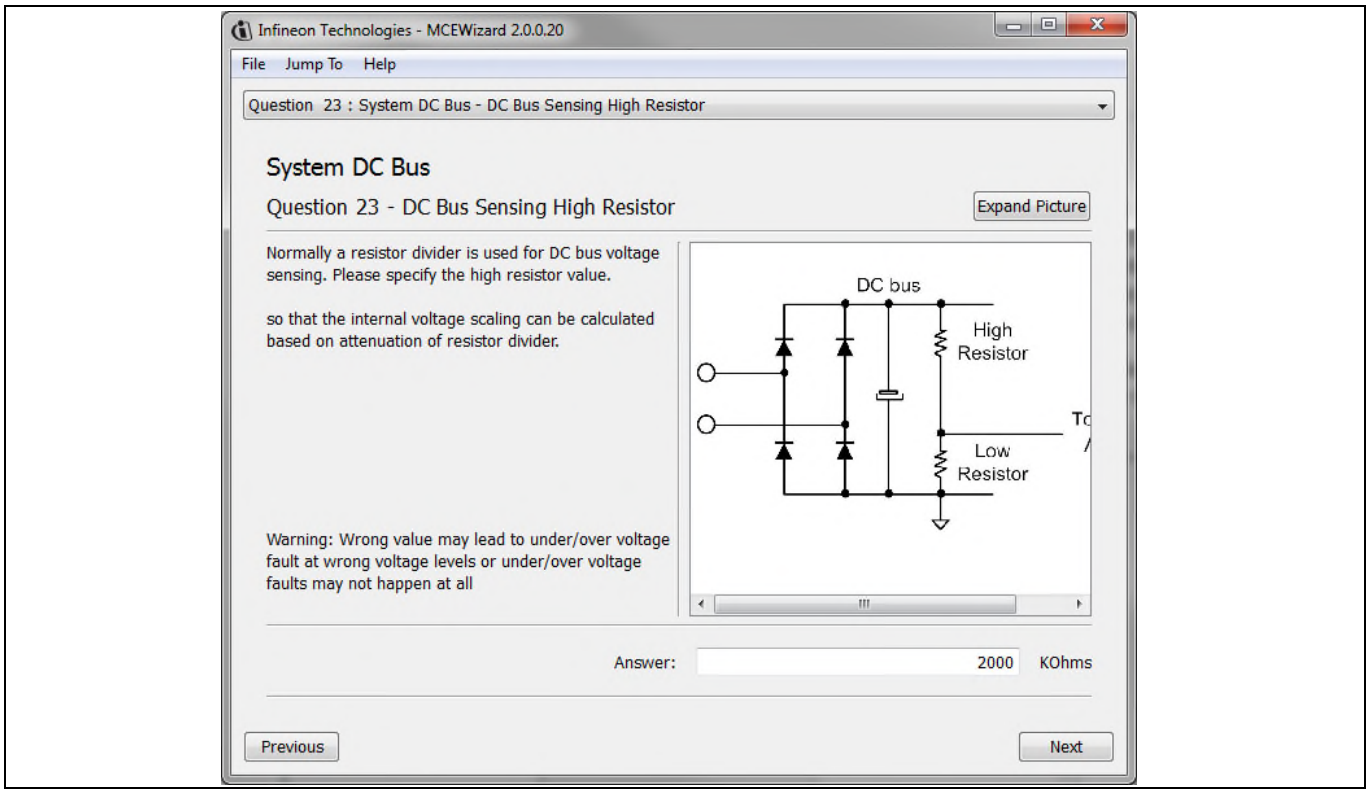

Figure 11 DC bus sensing configuration in MCEWizard

5.1.2 Motor external current feedback configuration and calculation

The current input value is product of the shunt resistance in milliohms and gain of external current sense amplifier for EVAL-M1-101T as shown in Figure 12.

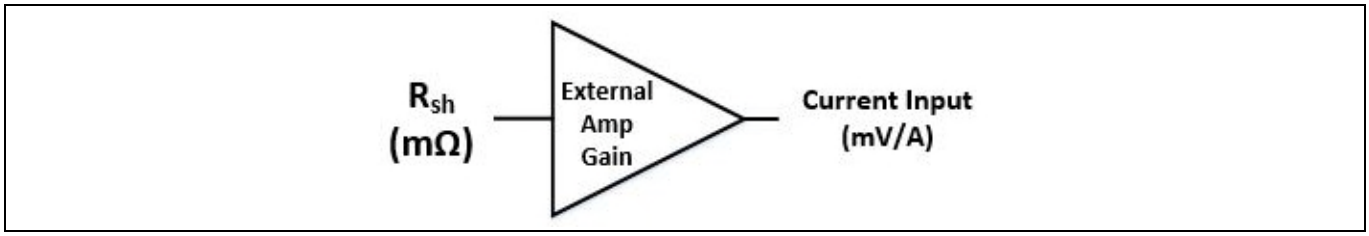

Figure 12 Current shunt feedback and sample timing for EVAL-M1-101T

The external amplifier gain circuit can be found in the schematics or user manual for the control board (For example, EVAL-M1-101T see Figure 13).

Figure 13 depicts IU+ current feedback sensing circuity on EVAL-M1-101T evaluation board. Please note that the default external amplification gain is less than 1 for current sense in this evaluation board.

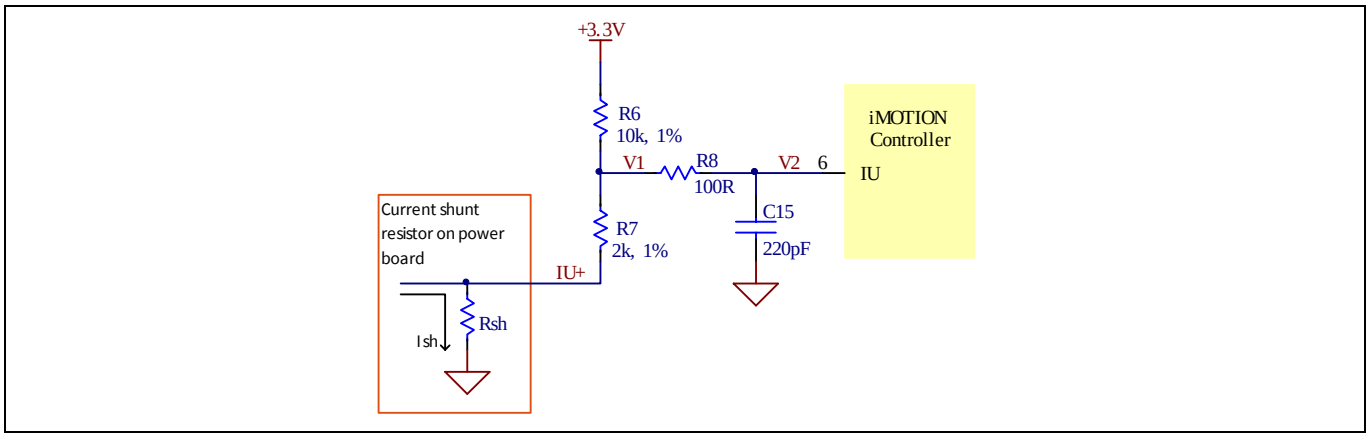

Figure 13 The part of Current feedback on the EVAL-M1-101T evaluation board

Based on the principle of Kirchhoff's voltage law,

$$V_2 \approx V_1 \approx (V_{DD} - I_{sh} * R_{sh}) * \frac{R_7}{R_6 + R_7} + I_{sh} * R_{sh} = \frac{R_7}{R_6 + R_7} V_{DD} + \frac{R_6}{R_6 + R_7} R_{sh} * I_{sh}$$

$$current\ input = \frac{R_6}{R_6 + R_7} R_{sh} = \frac{5}{6} R_sh$$

Based on this calculation, the current input for the MADK combination of EVAL-M1-101T and EVAL-M1-CTE610N3 is 83.3 mV/A.

Please use same procedure to calculate the current input for other combinations of MADK boards and enter it into MCEWizard as shown in Figure 14.

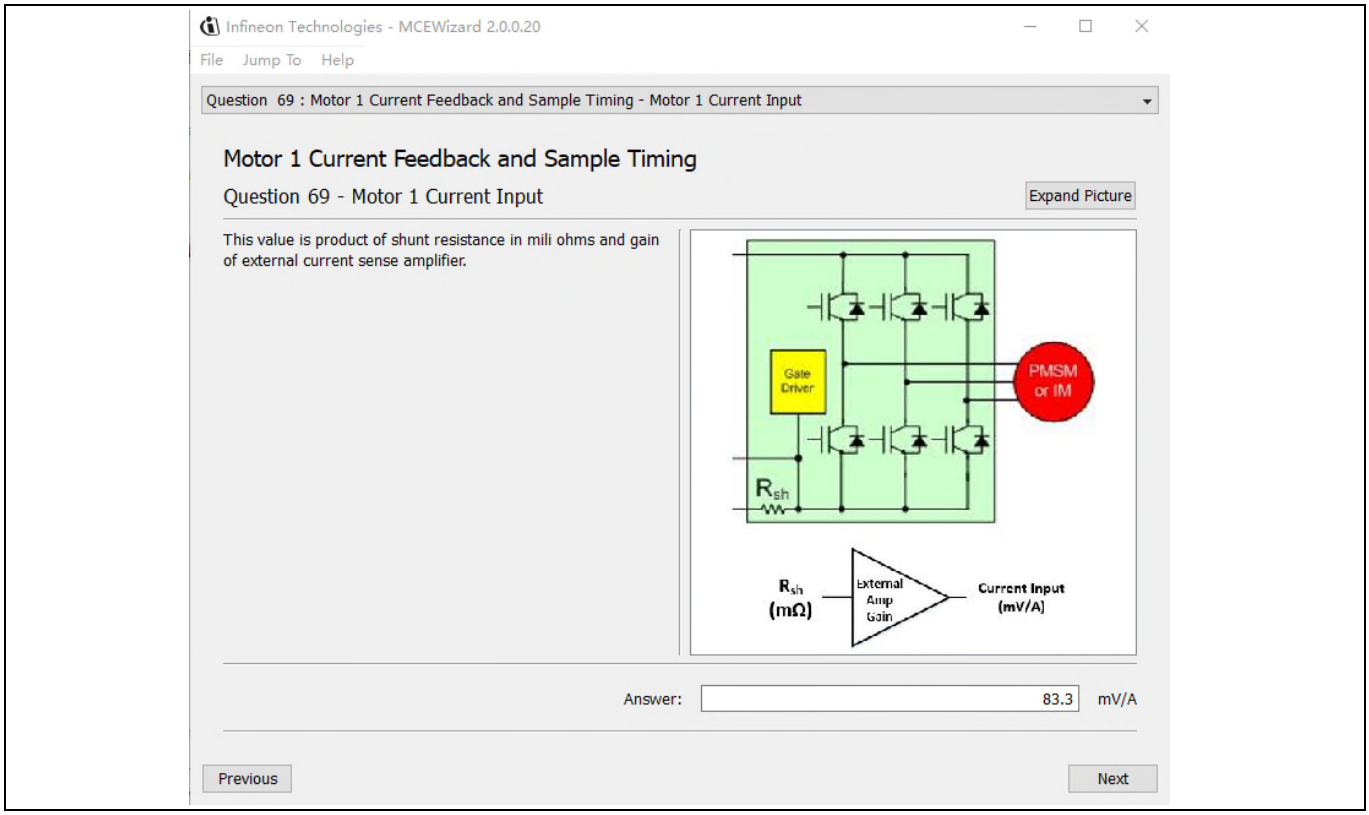

Figure 14 Current feedback configuration in MCEWizard for EVAL-M1-101T and EVAL-M1-CTE610N3

5.1.3 Inverter overcurrent protection and motor Gatekill configuration

Figure 15 displays the overcurrent protection circuitry. The current sensing signal I_Shunt is connected to ITRIP via the comparator U6A, and ITRIP is filtered through capacitor C30.

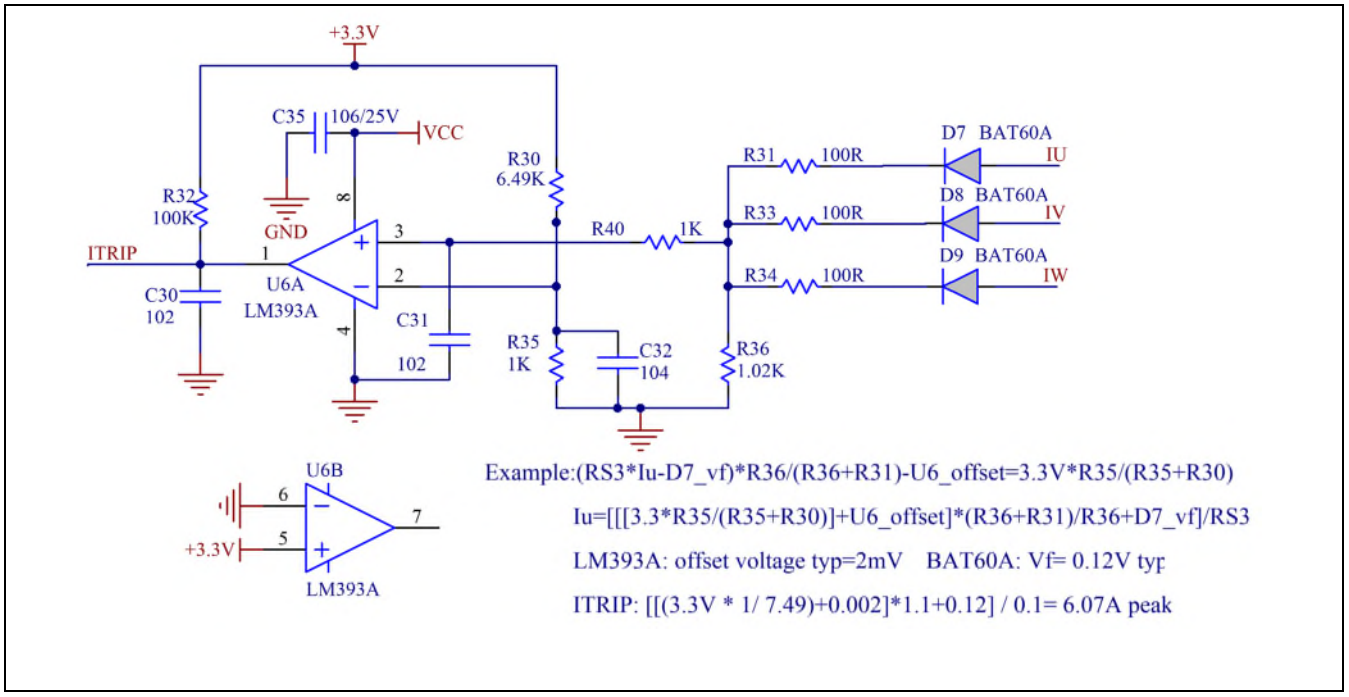

Figure 15 Overcurrent protection circuit on the EVAL-M1-IM231-A evaluation board

The inverter output peak current is about 6.07 A_{peak}.

$$I_{trip_U} = \frac{\left[VDD * \frac{R35}{R30 + R35} + Voffset\right] * \frac{R36 + R31}{R36} + VD7}{R_{SHUNT}}$$

If the motor peak current is larger than the setting value I_{trip} for more than I_{trip} input filter time, the RFE will be triggered low, which means that the Gatekill signal is active. For iMOTION™ IMC1xx control IC, there are three types of Gatekill input sources (as shown in Figure 16). For the input source configured as “Gatekill-Pin” or “Both”, the iMOTION™ control IC will stop the motor when the GateKill signal is active.

But please note that if the comparator for the Gatekill input source is selected, the external Gatekill signal will not be used. And the current-sensing signal I_Shunt will be compared by the internal comparator with the “Gatekill Comparator Reference” value only set in MCEWizard.

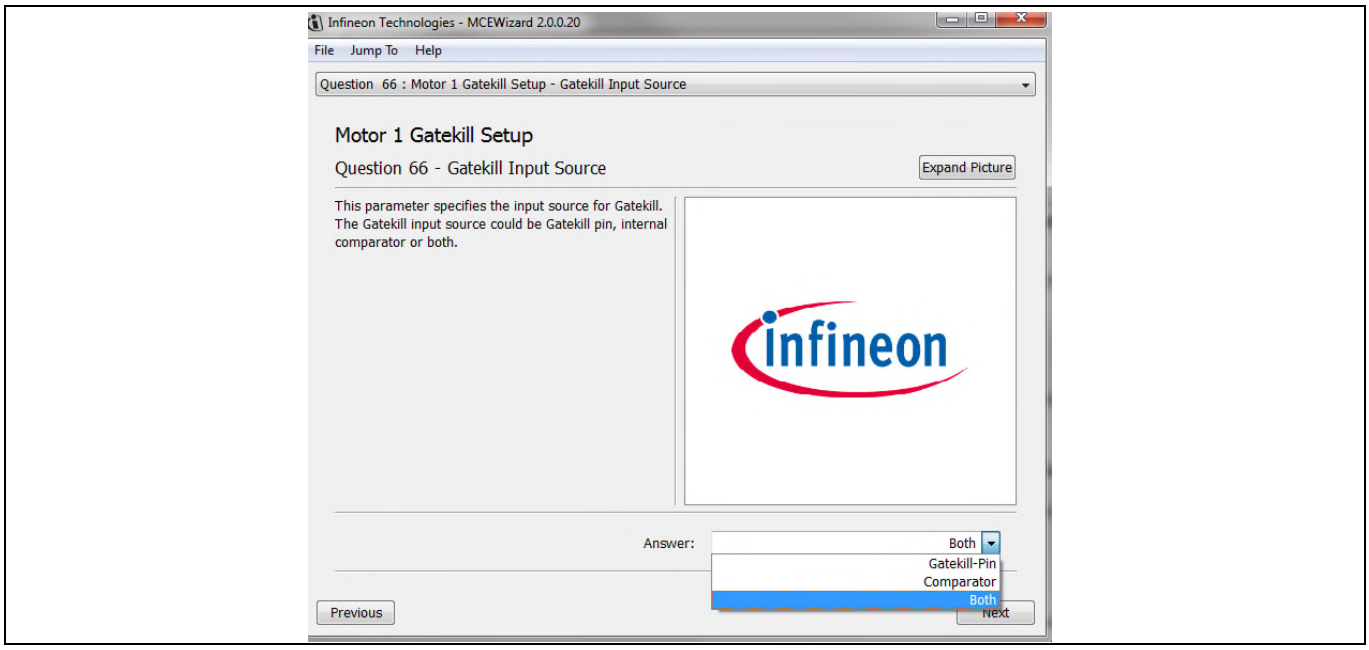

Figure 16 Gatekill configuration in MCEWizard for EVAL-M1-101T

5.2 EMI filter and rectifier circuit

Figure 17 depicts the schematic from the AC line input connector J2 to the rectified DC bus voltage. This circuitry includes a passive EMI filter consisting of elements CX1, CX2, L2, CY1 and CY2, a 4 A/600 V rectifier block BR1 and a NTC resistor RT1 for surge current protection. An electrolytic capacitor C13 and two ceramic capacitors C14 and C15 are used for buffering the rectified DC bus voltage DCP. During testing it is advisable to include an external fuse.

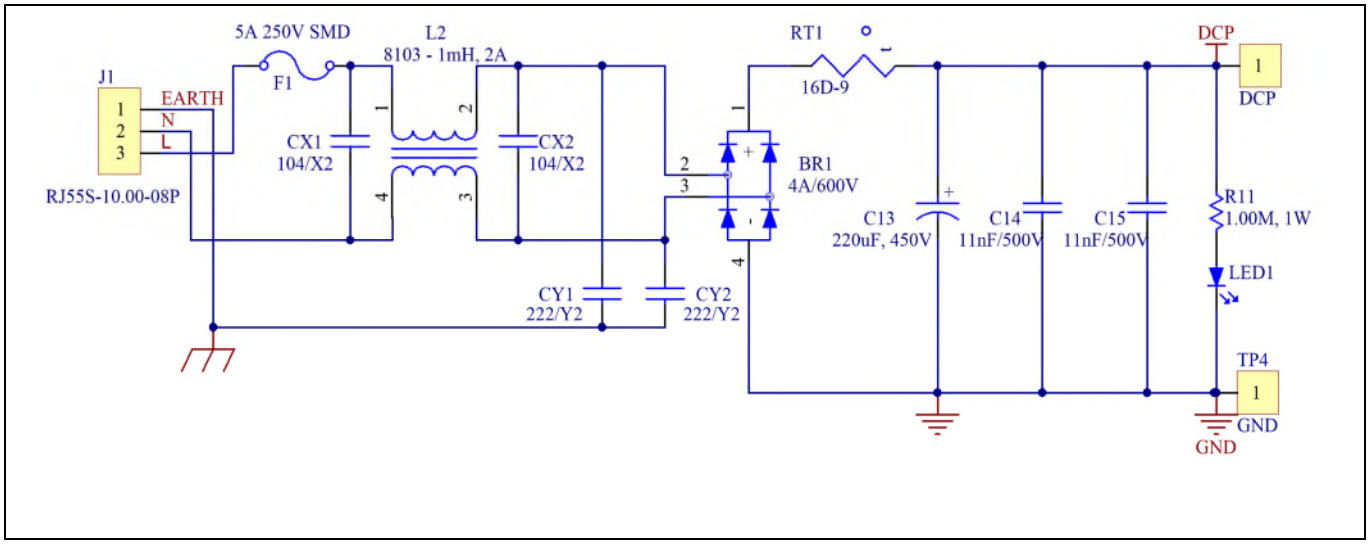

Figure 17 Schematic for EMI filter and AC/DC section of the EVAL-M1-IM231-A evaluation board

5.3 Inverter section using CIPOS™ Micro

The inverter section is implemented using the CIPOS™ Micro IPM as sketched in Figure 18. The module includes a combination of low VCE (sat) Trench IGBT technology and the industry benchmark rugged half-bridge drivers. The shunt resistor section is also given, including the 0 Ω resistors R23 to R27. These resistors allow connecting or disconnecting the shunts' signals to connector J4. The three capacitors C24, C26 and C33 are used as bootstrap capacitors to provide the necessary floating supply voltages VBS1, VBS2 and VBS3 respectively.

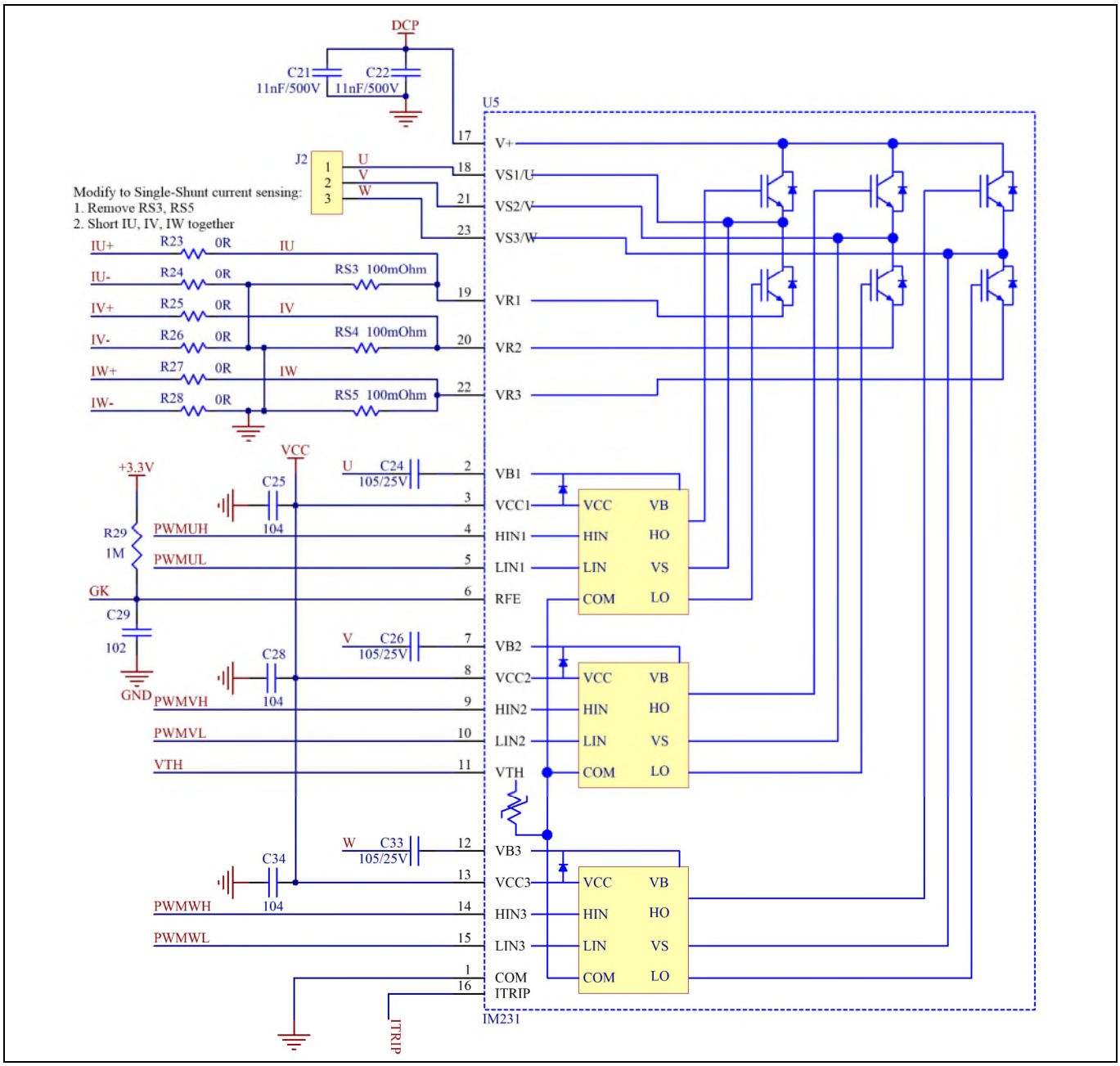

Figure 18 Schematic of the 3-phase inverter section using CIPOS™ Micro on EVAL-M1-IM231-A evaluation board

5.4 Auxiliary power supply

Figure 19 depicts the schematic of the auxiliary power supply for the EVAL-M1-IM231-A board. The circuit includes the latest CoolSET 5 of Infineon and flyback toplogy, directly output 15 V and 6 V. V_{CC} is connected to the gate drivers inside the CIPOS™ IPM.

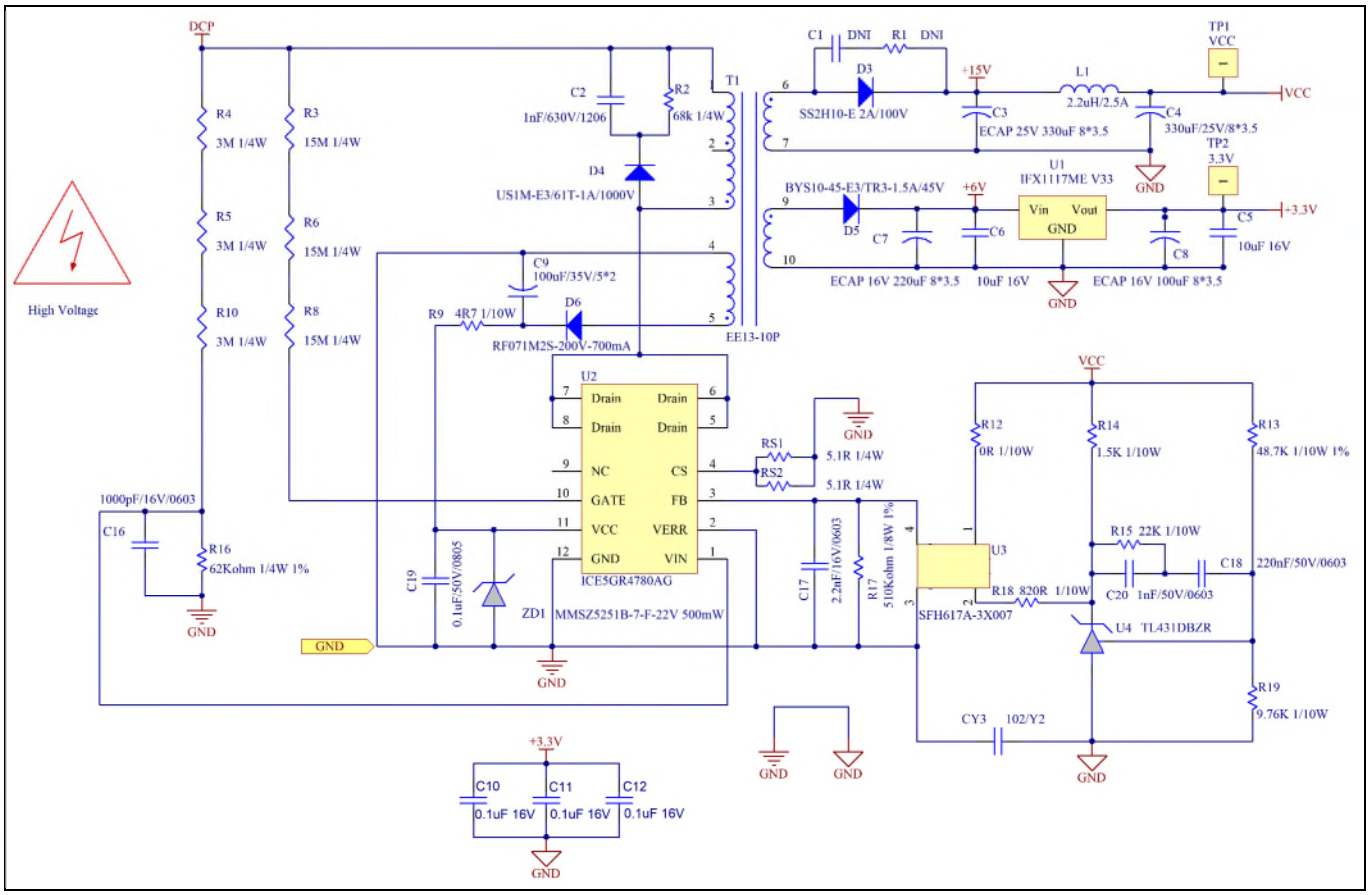

Figure 19 Power supply section of the EVAL-M1-IM231-A evaluation board

The linear voltage regulator IFX1117ME V33 generates 3.3 V from 6 V power supply V_{CC}. The 3.3 V power supply is used in the inverter external overcurrent comparator circuit. Both V_{CC} and 3.3 V are also present on the 20-pins iMOTION™ MADK-M1 interface connector J4 to power circuitry on the control board.

5.5 Schematics for EVAL-M1-IM231-A

Figure 20 displays the AC linear section schematic for EVAL-M1-IM231-A.

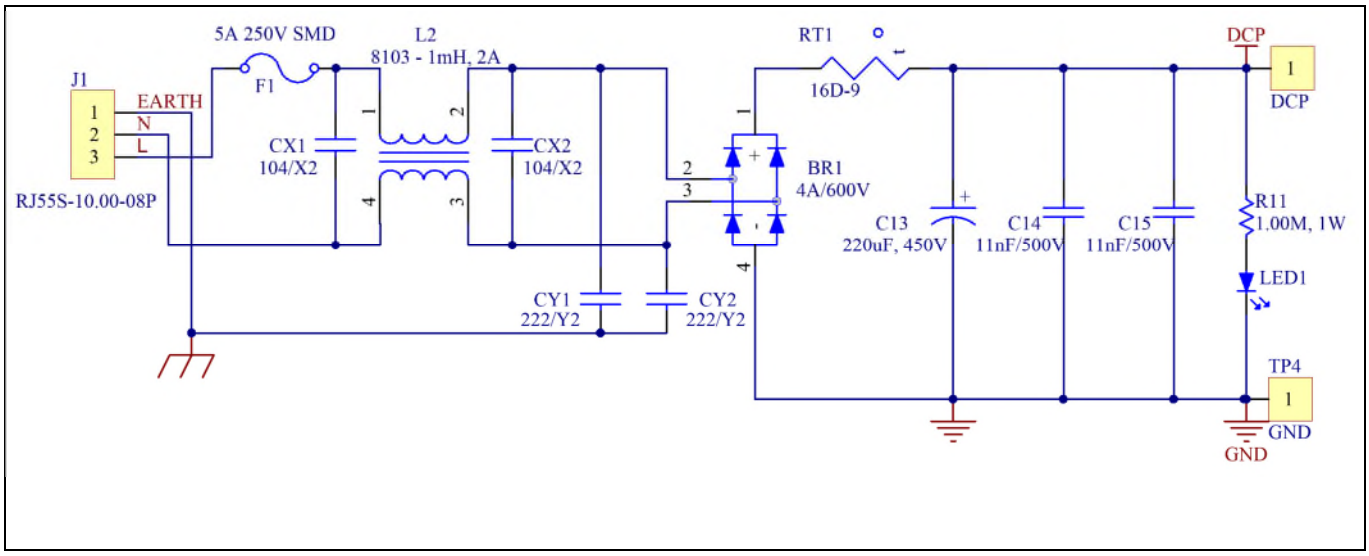

Figure 20 AC Linear section schematics for the EVAL-M1-IM231-A evaluation board

The auxiliary power supply section schematic for EVAL-M1-IM2331 is provided in Figure 21.

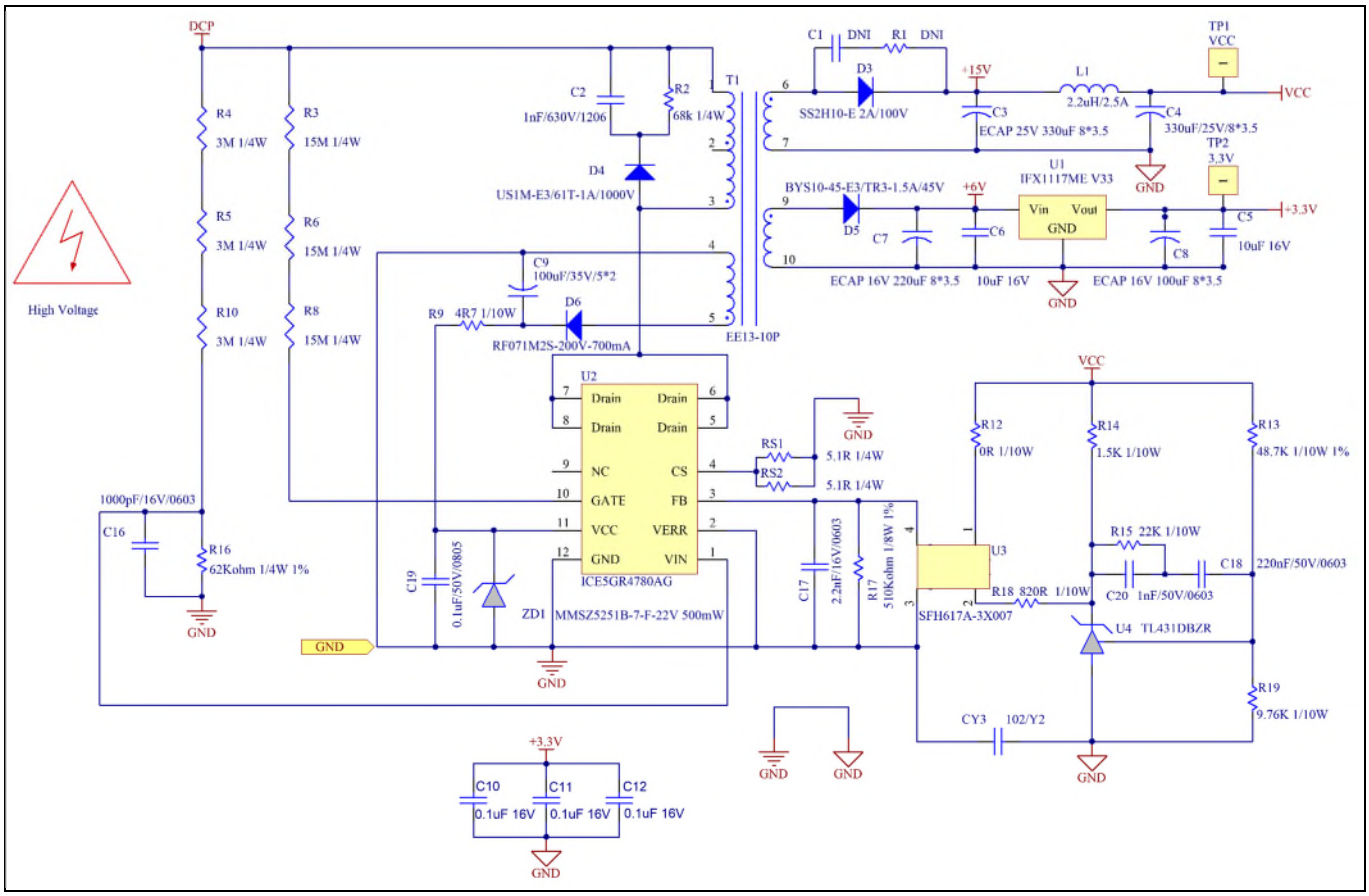

Figure 21 Auxiliary power supply section schematics for EVAL-M1-IM231-A

The inverter section schematic for EVAL-M1-IM231-A is provided in Figure 22.

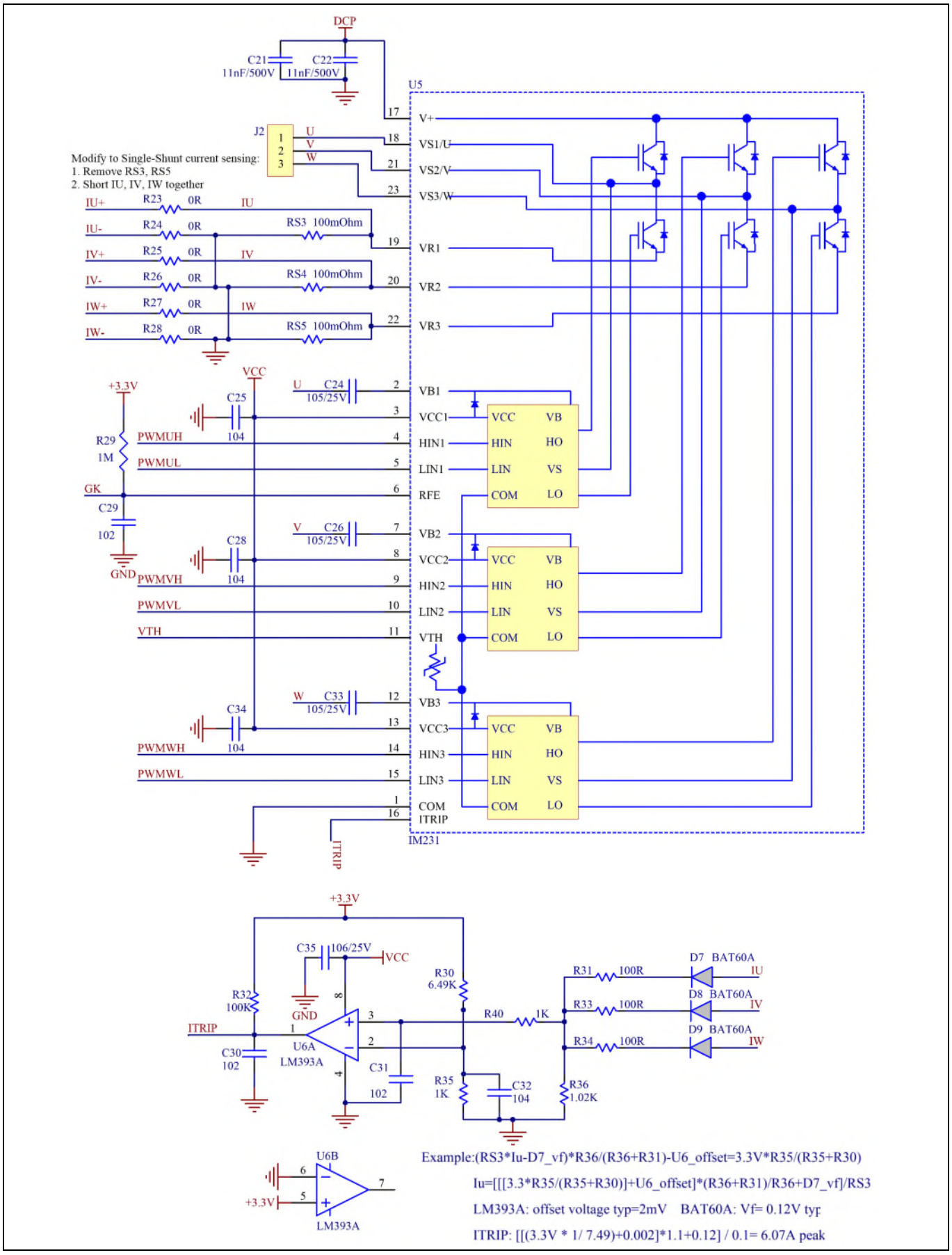

Figure 22 Inverter section schematics for EVAL-M1-IM231-A

5.6 Layout

The layout of this board can be used for different voltage or power classes. The PCB has two electrical layers with 35µm copper by default and its size is 100 mm × 100 mm. The PCB board thickness is 1.6mm. Get in contact with our technical support team to get more detailed information and the latest Gerber-files.

Figure 23 illustrates the top assembly print of the evaluation board.

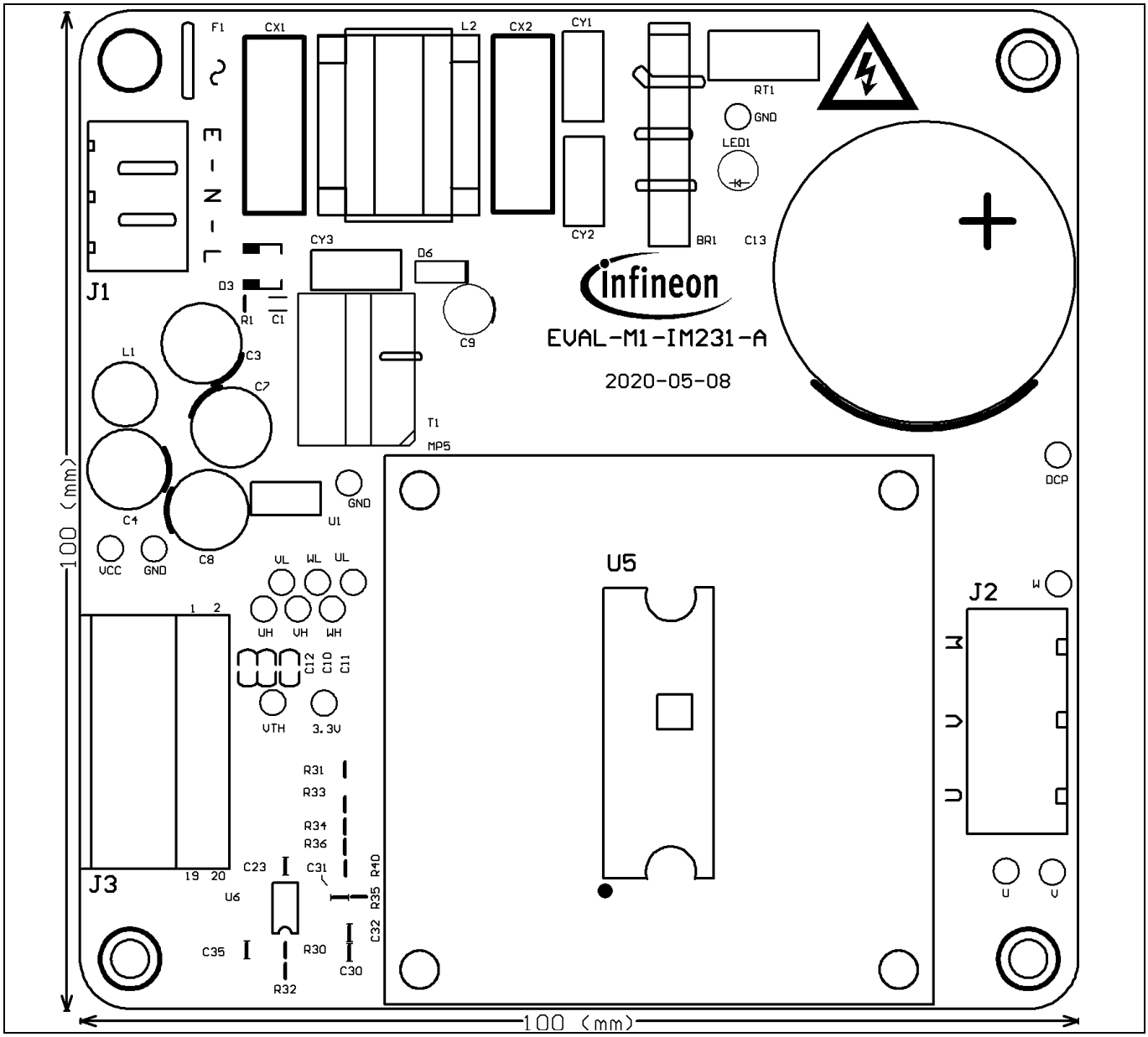

Figure 23 Top assembly print of the EVAL-M1-IM231-A evaluation board

Figure 24 depicts the bottom assembly print of the evaluation board.

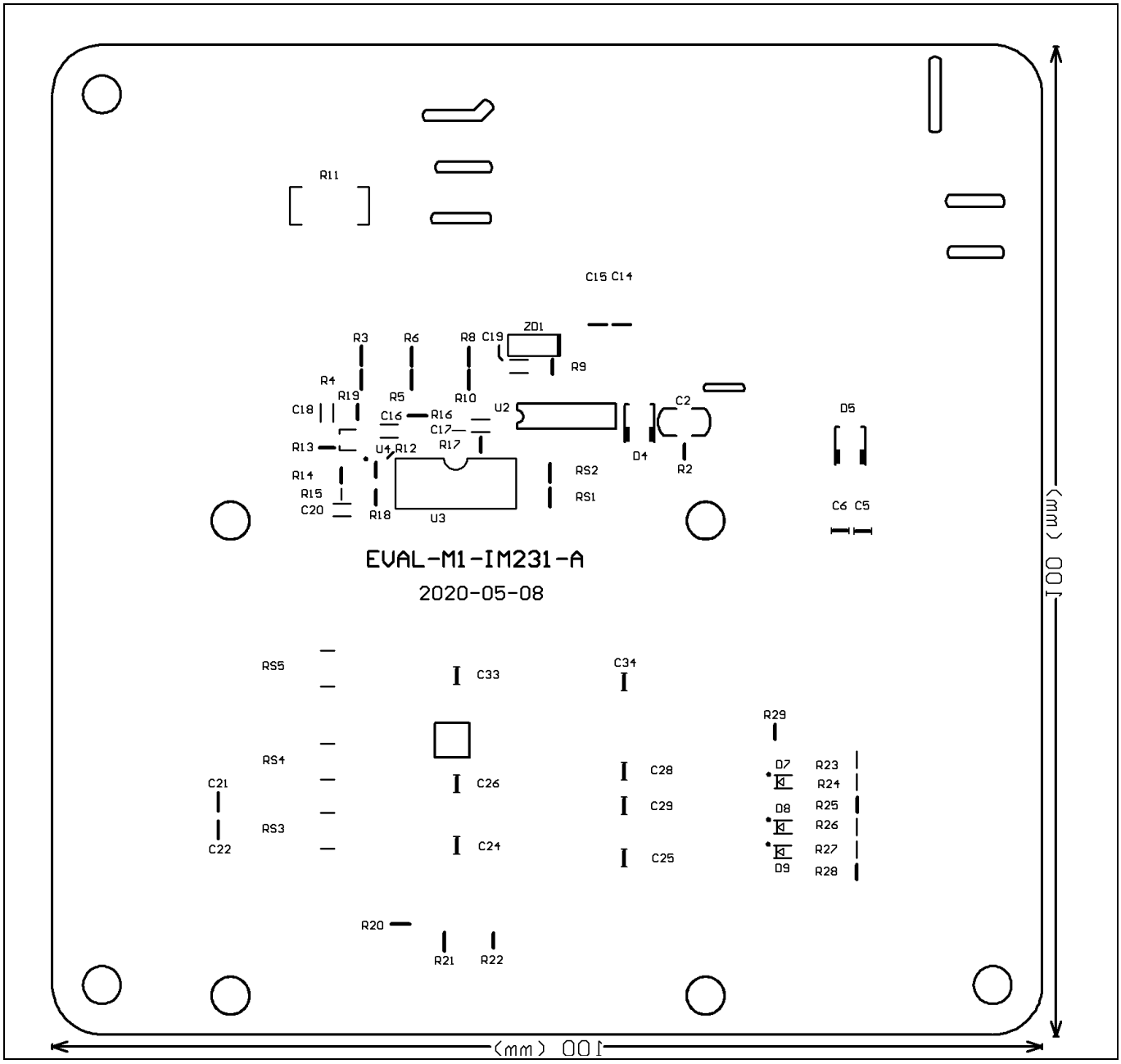

Figure 24 Bottom assembly print of the EVAL-M1-IM231-A evaluation board

The top layer of the PCB is provided in Figure 25.

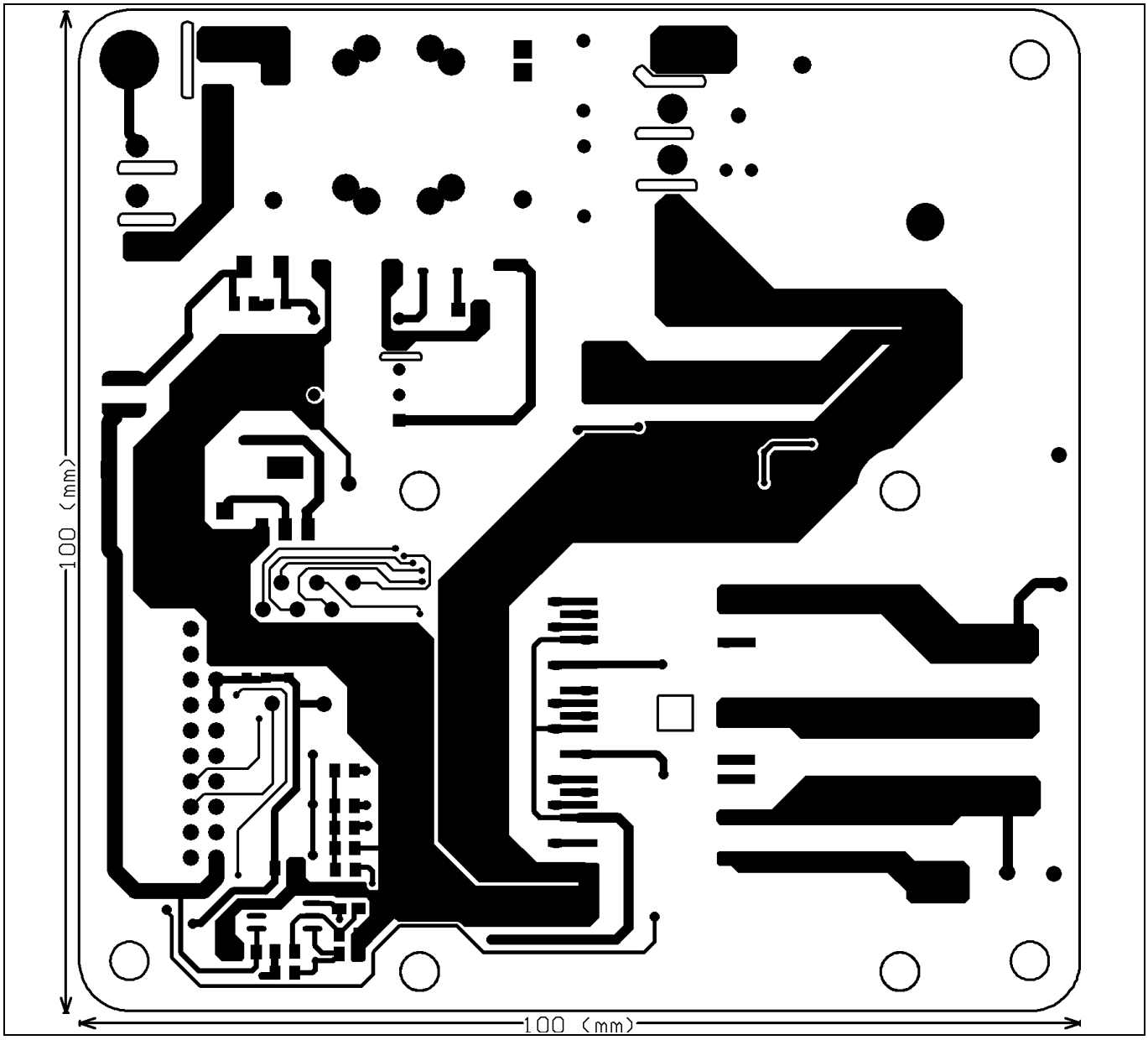

Figure 25 Top layer of the EVAL-M1-IM231-A

Figure 26 illustrates the bottom layer routing of the PCB.

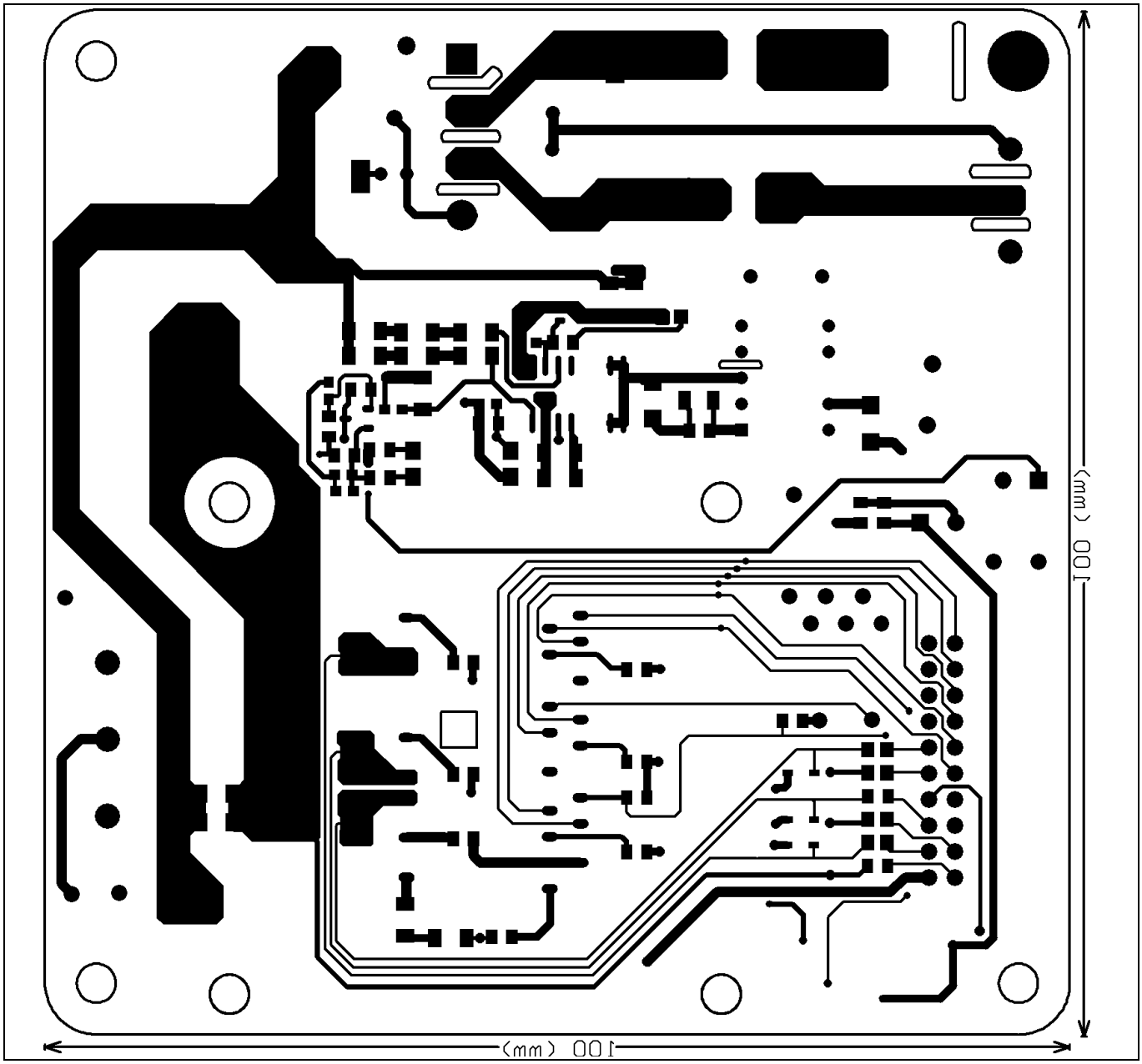

Figure 26 Bottom layer routing of the EVAL-M1-IM231-A

6 Bill of materials of EVAL-M1-IM231-A

Table 7 provides the complete bill of materials of the evaluation board.

Table 7 Bill of materials

No	Qty	Part description	Designator	Part number	Manufacturer
1	1	RECT BRIDGE GPP 4A 600V GBU	BR1	GBU406	
2	1	CAP SMD 470pF 100V 0603	C1	885012006083	Wurth Electronics Inc.
3	1	CAP CER 1000pF 630V 1206	C2	885342208011	Wurth Electronics Inc.
4	2	ECAP ALUM 100µF 16V RADIAL	C3, C8	860010372006	Wurth Electronics Inc.
5	1	ECAP ALUM 330µF 25V RADIAL	C4	860020474013	Wurth Electronics Inc.
6	2	CAP CER 10UF 16V X5R 0805	C6, C5	885012107014	Wurth Electronics Inc.
7	1	ECAP ALUM 220µF 16V RADIAL	C7	860080374009	Wurth Electronics Inc.
8	1	CAP ALUM 100UF 20% 35V RADIAL	C9	860020573008	Wurth Electronics Inc.
9	3	CAP CER 0.1UF 16V X7R 0603	C10, C11, C12	885012206046	Wurth Electronics Inc.
10	1	ECAP ALUM 220uF 450V 20% RADIAL	C13	861221485015	Wurth Electronics Inc.
11	4	CAP CER 0.012µF 500V X7R 1206	C14, C15, C21, C22	1206J5000123MDR	
12	1	CAP CER 1000pF 16V 0603	C16	885012206034	Wurth Electronics Inc.
13	1	CAP CER 2200PF 16V X7R 0603	C17	885012206036	Wurth Electronics Inc.
14	1	CAP CER 220nF 16V 0603	C18	885012206048	Wurth Electronics Inc.
15	1	CAP CER 0.1UF 50V X7R 0805	C19	885012207098	Wurth Electronics Inc.
16	1	CAP CER 1000PF 50V C0G/NP0 0603	C20	885012006063	Wurth Electronics Inc.
17	6	CAP CER 0.1µF 50V X7R 0805	C23, C25, C27, C28, C32, C34	885012207098	Wurth Electronics Inc.
18	3	CAP CER 1µF 25V X7R 0805	C24, C26, C33	885012207078	Wurth Electronics Inc.
19	1	CAP CER 1000PF 50V C0G/NP0 0805	C29	885012007063	Wurth Electronics Inc.
20	1	CAP CER 1000PF 50V C0G/NP0 0805	C30	885012007063	Wurth Electronics Inc.
21	1	CAP CER 1000pF 50V C0G/NP0 0805	C31	885012007063	Wurth Electronics Inc.
22	2	CAP CER 1000pF 50V C0G/NP0 0805	C35,C30	885012007063	Wurth Electronics Inc.
23	2	CAP FILM 0.1UF 10% 275VAC RADIAL	CX1, CX2	890324025017CS	Wurth Electronics Inc.
24	2	CAP CER 2200pF 250VAC RADIAL	CY1, CY2	DE2E3KY222MN3AM02F	
25	1	DIODE Schottky 100V 2A DO214AA	D3	SS2H10-E 2A/100V	
26	1	DIODE FRD 1000V 1A DO241AC	D4	US1M-E3/61T	
27	1	DIODE Schottky 45V 1.5A DO214AC	D5	BYS10-45-E3/TR3	
28	1	RF071M2S-200V-700mA	D6	RF071MM2STR	

29	1	SERIE 2165S - 5.08 MM - HORIZONTAL CABLE ENTRY WITH RISING CAGE CLAMP - WR-TBL	J2	691216510003S	Wurth Electronics Inc.
30	1	SERIE 2169 - 7.50 MM - HORIZONTAL CABLE ENTRY WITH RISING CAGE CLAMP - WR-TBL	J3	691216910003	Wurth Electronics Inc.
31	1	2.54MM ANGLED DUAL SOCKET HEADER	J4	613020243121	Wurth Electronics Inc.
32	1	FIXED IND 2.2UH 2.5A 71 MOHM SMD	L1	744773022	Wurth Electronics Inc.
33	1	8103-RC	L2	JWMILLER_8103	
34	1	LED RED CLEAR ROUND T/H	LED1	151034RS03000	Wurth Electronics Inc.
35	1	DNI	R1	DNI	
36	1	RES SMD 68K OHM 5% 1/8W 0805	R2	RC0805JR-0768KL	
37	3	RES SMD 15MΩ 5% 1/4W 1206	R3, R6, R8	RC1206JR-0715ML	
38	3	RES SMD 3M OHM 5% 1/4W 1206	R4, R5, R10	RC1206JR-073ML	
39	1	RES SMD 4.7Ω 1% 1/8W 0805	R9	RC0805FR-074R7L	
40	1	RES SMD 1M OHM 1% 1W 2512	R11	CHV2512-FX-1004ELF	
41	1	RES SMD 1.5kΩ 1% 1/8W 0805	R14	RC0805JR-071K5L	
42	1	RES SMD 22kΩ 5% 1/8W 0805	R15	RC0805JR-0722KL	
43	1	RES SMD 62kΩ 5% 1/4W 1206	R16	RC1206FR-0762KL	
44	1	RES SMD 510kΩ 1% 1/8W 0805	R17	RC0805FR-07510KL	
45	1	RES SMD 820Ω 1% 1/8W 0805	R18	RC0805JR-07820RL	
46	1	RES SMD 9.76kΩ 1% 1/8W 0805	R19	RC0805FR-079K76L	
47	2	RES SMD 1 M Ω 1% 1/4W 1206	R20, R21	RV1206FR-071ML	
48	2	RES SMD 4.87 kΩ 1% 1/8W 0805	R22,R13	RC0805FR-074K87L	
49	7	RES SMD 0 Ω JUMPER 1/8W 0805	R12, R23, R24, R25, R26, R27, R28	RC0805JR-070RP	
50	1	RES SMD 680K OHM 5% 1/8W 0805	R29	RC0805JR-07680KL	
51	1	RES SMD 6.49 kΩ 1% 1/8W 0805	R30	RT0805BRD076K49L	
52	4	RES SMD 1 kΩ 1% 1/8W 0805	R35, R40	RC0805FR-071KL	
53	1	RES SMD 4.7 kΩ 1% 1/8W 0805	R32	RC0805FR-074K7L	
54	3	RES SMD 100 Ω1% 1/8W 0805	R31, R33, R34	RC0805FR-07K100RL	

55	1	RES SMD 1.02 kΩ1% 1/8W 0805	R36	RC0805FR-071K02RL	
56	3	RES 0.1 OHM 1% 3/4W 2010	RS3, RS4, RS5	RL2010FK-070R1L	
57	1	Transformer EE13-10P	T1	750344226	Wurth Electronics Inc.
58	1	NTC 15Ω 9MM DIA	RT1	NTC15D-9	
59	17	TEST POINT PC MINI .040"D WHITE	TP1,TP2, TP3,TP4, TP5,TP6,TP7,TP8,TP9,TP10,TP11,TP12,TP13,TP14,TP15,TP16,TP17	5002	
60	1	IC REG LINEAR 3.3V 1A SOT223-4	U1	IFX1117MEV33HTMA1	Infineon Technologies
61	1	IC AUX Power PD-DSO-12	U2	ICE5GR4780AG	Infineon Technologies
62	1	IC OptoCoupler	U3	SFH617A-3X007	
63	1	IC TL431DBZR	U4	TL431DBZR	
64	1	IC CIPOS Micro Module	U5	IM231-L6S1B/ IM231-L6T2B	Infineon Technologies
65	1	IC DUAL DIFF COMPARATOR 8-SOIC	U6	LM393ADR	
66	1	DIODE ZENER 22V 500mW SOD123	ZD1	MMSZ525B-7-F	Wurth Electronics Inc.
67	3	DIO SBD 3A 10V SOD-323-2P SMD	D7,D8,D9	BAT60A	Infineon Technologies
68	1	Littelfuse F6632DKR-ND 5A 250VAC	F1	F6632DKR-ND	
69	3	DIO SBD 3A 10V SOD-323-2P SMD	D7,D8,D9	BAT60A	Infineon Technologies

7 Reference

[1] 2018-09_AN2018-20_EVAL-M1- CTE610N3 User Manual_V1.0 EN

[2] EVAL-M1-101T User Manual is available for download on Infineon's website

[3] EVAL-M1-183M User Manual is available for download on Infineon's website

[4] MCEWizard User Guide

[5] MCEDesigner User Guide

Note: All listed reference materials are available for download on Infineon's website[www.infineon.com/.](http://www.infineon.com/)
All the iMOTION MADK evaluation board's User Manuals are available at www.infineon.com/MADK

Attention: Infineon's product registration is online now. Register your board, and download more information.

3 easy steps to register:

1. Go to www.Infineon.com/ login to myinfineon
2. Click on "Product Registration"
3. Choose your board and enter board series number; download the related information package

Revision history

Major changes since the last revision

Version number	Revision Date	Revision description
1.0	2019-01-23	First release
1.1	2020-07-09	Add D7,D8,D9,F1,R36 R31,R33,R34 from 1Kohm change to 100ohm R30 from 15Kohm change to 6.49Kohm Update photo of the PCB

Trademarks of Infineon Technologies AG
µHVIC™, µIPM™, µPFC™, AU-ConvertIR™, AURIX™, C166™, CanPAK™, CIPOS™, CIPURSE™, CoolDP™, CoolGaN™, COOLiR™, CoolMOS™, CoolSET™, CoolSiC™, DAVE™, DI-POL™, DirectFET™, DrBlade™, EasyPIM™, EconoBRIDGE™, EconoDUAL™, EconoPACK™, EconoPIM™, EiceDRIVER™, eupec™, FCOS™, GaNpowIR™, HEXFET™, HITFET™, HybridPACK™, iMOTION™, IRAM™, ISOFACE™, IsoPACK™, LEDrivIR™, LITIX™, µIPM™, MIPAQ™, ModSTACK™, my-d™, NovalithIC™, OPTIGA™, OptiMOS™, ORIGA™, PowIRaudio™, PowIRStage™, PrimePACK™, PrimeSTACK™, PROFET™, PRO-SIL™, RASIC™, REAL3™, SmartLEWIS™, SOLID FLASH™, SPOC™, StrongIRFET™, SupIRBuck™, TEMPFET™, TRENCHSTOP™, TriCore™, UHVIC™, XHP™, XMC™

Trademarks updated November 2015

Other Trademarks
All referenced product or service names and trademarks are the property of their respective owners.

Edition 2020-07-09

Published by

Infineon Technologies AG

81726 Munich, Germany

© 2020 Infineon Technologies AG. All Rights Reserved.

Do you have a question about this document?

Email: erratum@infineon.com

Document reference
AN2018-36 EVAL-M1-IM231-A User Manual

IMPORTANT NOTICE
The information contained in this application note is given as a hint for the implementation of the product only and shall in no event be regarded as a description or warranty of a certain functionality, condition or quality of the product. Before implementation of the product, the recipient of this application note must verify any function and other technical information given herein in the real application. Infineon Technologies hereby disclaims any and all warranties and liabilities of any kind (including without limitation warranties of non-infringement of intellectual property rights of any third party) with respect to any and all information given in this application note.

The data contained in this document is exclusively intended for technically trained staff. It is the responsibility of customer's technical departments to evaluate the suitability of the product for the intended application and the completeness of the product information given in this document with respect to such application.

For further information on the product, technology delivery terms and conditions and prices please contact your nearest Infineon Technologies office (**www.infineon.com**).

Please note that this product is not qualified according to the AEC Q100 or AEC Q101 documents of the Automotive Electronics Council.

WARNINGS
Due to technical requirements products may contain dangerous substances. For information on the types in question please contact your nearest Infineon Technologies office.

Except as otherwise explicitly approved by Infineon Technologies in a written document signed by authorized representatives of Infineon Technologies, Infineon Technologies' products may not be used in any applications where a failure of the product or any consequences of the use thereof can reasonably be expected to result in personal injury.