EVAL-M1-36-84A User Manual

iMOTION™ Modular Application Design Kit

About this document

Scope and purpose

This application note provides an overview of the evaluation board EVAL-M1-36-84A including its main features, key data, pin assignments and mechanical dimensions.

The board is available in two versions.

EVAL-M1-36-84A is a complete evaluation-board including a 3-phase IPM for motor drive applications. Together with EVAL-M1-101T or EVAL-M1-099M it features and demonstrates Infineon's IPM technology for motor drives.

The evaluation board EVAL-M1-36-84A for Intelligent Power Modules (IPM) was developed to support customers during their first steps designing applications with CIPOS™ Nano power modules.

Intended audience

This application note is intended for all technical specialists working with the EVAL-M1-36-84A board.

Table of Contents

About this document **1**
Table of Contents **1**
1 Safety precautions **2**
2 Introduction **4**
3 Design features **6**
3.1 Key data 7
4 Pin Assignments **11**
5 Getting Started with EVAL-M1-36-84A **13**
5.1 Setting up the system 13
5.2 iMOTION™ development tools and software 15
5.2.1 MCEWizard setup overview 15
5.2.2 MCEDesigner setup overview 17
6 Schematics and Layout **19**
6.1 DC-Link Voltage Measurement 19
6.2 Inverter section using CIPOS™ Nano IPM 20
6.3 Current Measurement and Over Current Circuit 21
6.4 Auxiliary Power supply 22
6.5 PCB Layout 23
7 Bill of Materials of EVAL-M1-36-84A **25**
8 Reference **28**
Revision History **29**

1 Safety precautions

In addition to the precautions listed throughout this manual, please read and understand the following statements regarding hazards associated with development systems.

Table 1 Precautions

	***Attention:*** ***The ground potential of the EVAL-M1-36-84A system is biased to a negative DC bus voltage potential. When measuring voltage waveform by oscilloscope, the scope's ground needs to be isolated. Failure to do so may result in personal injury or death. Darkened display LEDs are not an indication that capacitors have discharged to safe voltage levels.***
	***Attention:*** ***EVAL-M1-36-84A system contains DC bus capacitors which take time to discharge after removal of the main supply. Before working on the drive system, wait three minutes for capacitors to discharge to safe voltage levels. Failure to do so may result in personal injury or death. Darkened display LEDs are not an indication that capacitors have discharged to safe voltage levels.***
	***Attention:*** ***Only personnel familiar with the drive and associated machinery should plan or implement the installation, start-up and subsequent maintenance of the system. Failure to comply may result in personal injury and/or equipment damage.***
	***Attention:*** ***The surfaces of the drive may become hot, which may cause injury.***
	***Attention:*** ***EVAL-M1-36-84A system contains parts and assemblies sensitive to Electrostatic Discharge (ESD). Electrostatic control precautions are required when installing, testing, servicing or repairing this assembly. Component damage may result if ESD control procedures are not followed. If you are not familiar with electrostatic control procedures, refer to applicable ESD protection handbooks and guidelines.***
	***Attention:*** ***A drive, incorrectly applied or installed, can result in component damage or reduction in product lifetime. Wiring or application errors such as under sizing the motor, supplying an incorrect or inadequate AC supply or excessive ambient temperatures may result in system malfunction.***
	***Attention:*** ***Remove and lock out power from the drive before you disconnect or reconnect wires or perform service. Wait three minutes after removing power to discharge the bus capacitors. Do not attempt to service the drive until the bus capacitors have discharged to zero. Failure to do so may result in personal injury or death.***



Attention: ***EVAL-M1-36-84A system is shipped with packing materials that need to be removed prior to installation. Failure to remove all packing materials which are unnecessary for system installation may result in overheating or abnormal operating condition.***

2 Introduction

The EVAL-M1-36-84A evaluation board is a part of the iMOTION™ Modular Application Design Kit for drives (iMOTION™ MADK).

The MADK-platform is intended to use various power stages with different control boards. These boards can be easily interfaced through the 20 pin iMOTION™MADK-M1 interface connector.

This evaluation board was designed to give comprehensible solutions of a power stage featuring CIPOS™. The board is equipped with all assembly groups for sensor less field oriented control (FOC). DC-link is provided by direct DC-input to give direct control to DC-ripple by external source. It contains in every of three output phases emitter-shunts for current sensing and a voltage divider for DC-link voltage measurement.

The EVAL-M1-36-84A evaluation board is available from Infineon. The features of this board are described in the design feature chapter of this document, whereas the remaining paragraphs provide information to enable the customers to copy, modify and qualify the design for production, according to their own specific requirements.

Environmental conditions were considered in the design of the EVAL-M1-36-84A. The design was tested as described in this document but not qualified regarding safety requirements or manufacturing and operation over the whole operating temperature range or lifetime. The boards provided by Infineon are subject to functional testing only.

Evaluation boards are not subject to the same procedures as regular products regarding Returned Material Analysis (RMA), Process Change Notification (PCN) and Product Discontinuation (PD). Evaluation boards are intended to be used under laboratory conditions by specialists only.

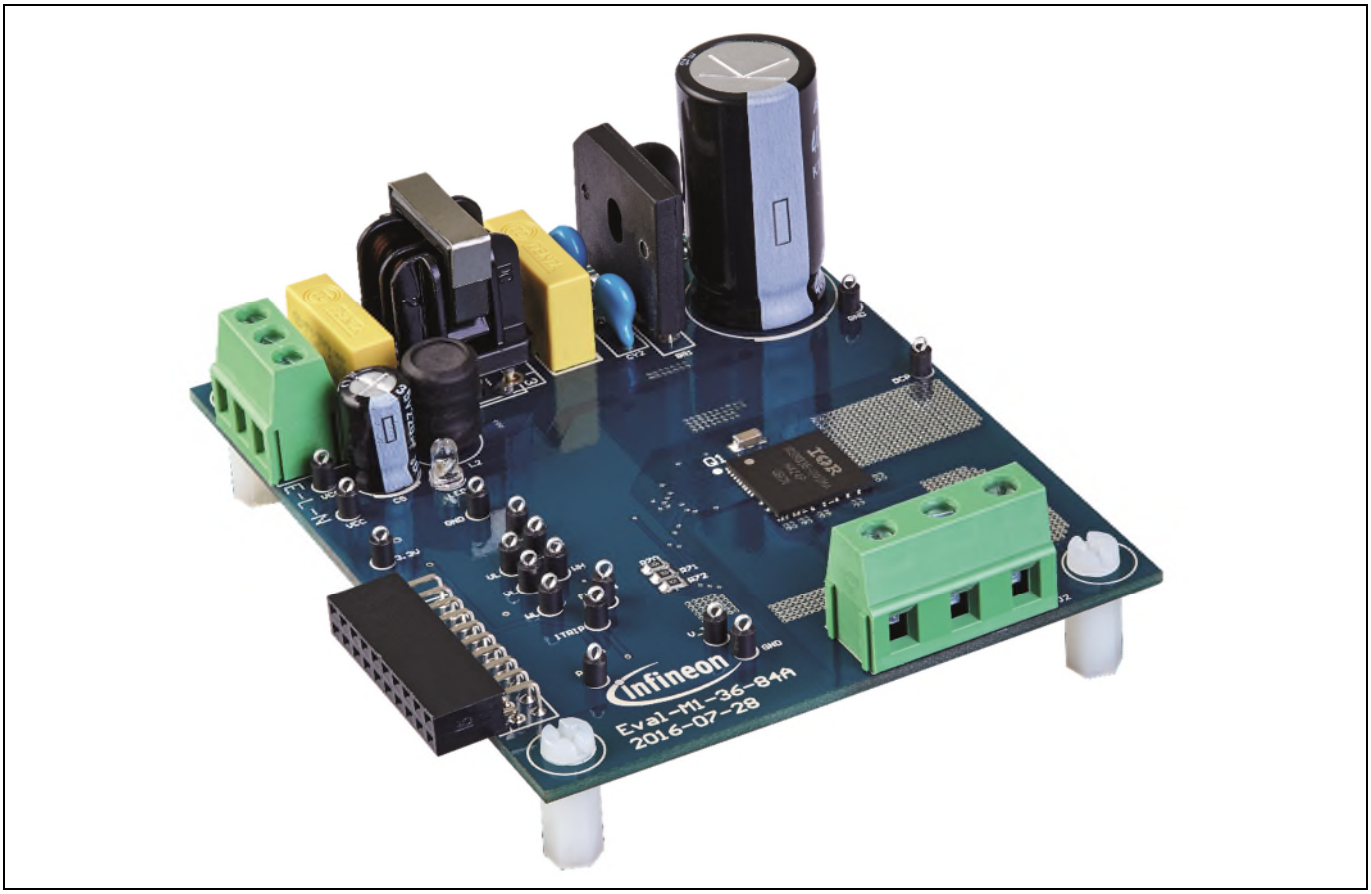

Figure 1 Evaluation-board EVAL-M1-36-84A

Introduction

Figure 1 shows the evaluation board EVAL-M1-36-84A. This board is compatible with all CIPOS™ modules. This document explains the features and details of CIPOS™ Nano IRSM836-084MA. This module is rated 250 V. Ratings and other details of the board are explained in the subsequent sections.

3 Design features

The following sections provide an overview of the board including main attributes, key data, pin assignments and mechanical dimensions. EVAL-M1-36-84A is a complete evaluation board including a 3-phase IPM for motor drive applications. The board demonstrates Infineon's IPM technology for motor drives.

CIPOS™ Nano Intelligent Power Module (IRSM836-084MA) features are:

- 3-phase inverter including high voltage gate drivers
- Integrated bootstrap functionality
- Low 0.31 Ω @ 25°C RDS_max(on) Trench MOSFET
- Under-voltage lockout for all channels
- Matched propagation delay for all channels
- Optimized dV/dt for loss and EMI trade offs
- 3.3 V Schmitt-triggered active high input logic
- Open-source for single and leg-shunt current sensing
- Motor power range up to 150 W, without heat sink
- Cross-conduction prevention logic
- Protection shutdown pin
- Isolation 1500 VRMS, 1min
- ROHS compliant
- Fault reporting output and an adjustable fault clear timer
- Itrip (overcurrent) protection

The major functionalities of the board are:

- Nominal input voltage 220 V_{AC}
- 150 W motor power range
- 3 leg shunt configuration
- 3.3 V logic compatible
- Overcurrent protection
- Fault diagnostic output
- PCB is 90x 75mm has two layers with 1oz (~35µm) copper each

3.1 Key data

Figure 2 provides internal electrical schematics of IRSM836-084MA. For further information regarding these IPMs like static and dynamic electrical behavior, as well as thermal and mechanical characteristics please refer to the datasheet of the IRSM836-084MA.

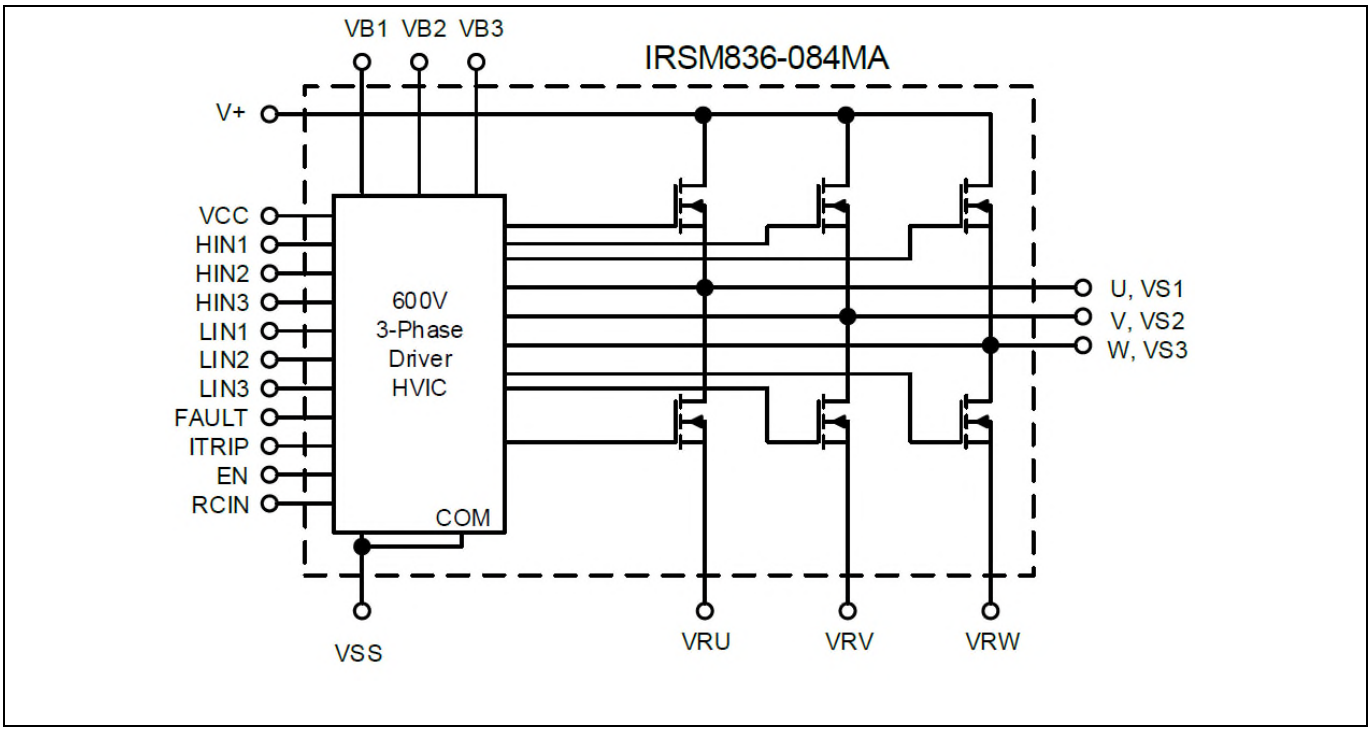

Figure 2 CIPOS™ Nano internal electrical schematic

Table 2 lists major absolute maximum ratings of the IRSM836-084MA. Absolute maximum ratings are limitations which should not be less than minimum or higher than maximum ratings. Outside these limitations for safe operation, damage of the module should be expected.

Table 2 CIPOS™ Nano Absolute Maximum Ratings of IRSM836-084MA

Symbol	Description	Min	Max	Unit
BV_{DSS}	MOSFET Blocking Voltage	---	250	V
I_O @ T=25°C	DC Output Current per MOSFET	---	7	A
I_{OP}	Pulsed Output Current	---	27	A
P_d @ TC=25°C	Maximum Power Dissipation per MOSFET	---	40	W
V_{ISO}	Isolation Voltage (1min)	---	1500	V_{RMS}
T_J	Operating Junction Temperature	-40	150	°C
T_L	Lead Temperature (Soldering, 30 seconds)	---	260	°C
T_S	Storage Temperature	-40	150	°C
$V_{S1,2,3}$	High Side Floating Supply Offset Voltage	$V_{B1,2,3}$ - 20	$V_{B1,2,3}$ +0.3	V
$V_{B1,2,3}$	High Side Floating Supply Voltage	-0.3	250	V
V_{CC}	Low Side and Logic Supply voltage	-0.3	20	V
V_{IN}	Input Voltage of LIN, HIN, ITRIP, EN, RCIN, FLT	-0.3	V_{CC}+0.3	V

Table 3 depicts the recommended operating conditions of IRSM836-084MA.

Table 3 Recommended operating conditions of CIPOS™ Nano IRSM836-084MA

Symbol	Description	Min	Max	Unit
V+	Positive DC Bus Input Voltage	---	200	V
$V_{S1,2,3}$	High Side Floating Supply Offset Voltage	---	200	V
$V_{B1,2,3}$	High Side Floating Supply Voltage	V_{Sx}+10	V_{Sx}+20	V
V_{CC}	Low Side and Logic Supply Voltage	11.5	18.5	V
V_{IN}	Input Voltage of L_{IN}, H_{IN}, I_{TRIP}, EN, FLT	0	5	V
F_P	PWM Carrier Frequency	---	20	kHz

Design features

Table 4 shows the important specifications of the evaluation board EVAL-M1-36-84A.

Table 4 EVAL-M1-36-84A board specifications

Parameters	Value	Conditions
Input		
Voltage	100 - 120 V_{rms}	lower AC input, less motor power output
Input current	1 A	input 110 V_{AC}, T_a=25°C, IRSM836-084MA
Output		
Power(3phases)	150 W**	IRSM836-084MA
Current per leg	1000 mA*	IRSM836-084MA
	*RMS, f_{PWM}=6 kHz, T_a=25°C, T_c=100°C, */**without heatsink	
DC Bus		
Maximum DC bus voltage	200 V	
Minimum DC bus voltage	60 V	
Current feedback		
Current sensing device RS1,RS2,RS3	0.25 Ω	The default configuration uses three shunts in the emitter paths. To implement single shunt sensing, the board should be modified: 1) RS1 and RS3 have to be removed 2) IU+,IV+,IW+ have to be connected 3) R7 has to be changed to 3.48 kΩ
Protections		
Output current trip level	2.5A_{pk}	Configured by changing either shunt resistors RS1, RS2, RS3 or comparator threshold by resistor R7
On board power supply		
15V	15 V±5 %, Max 20 mA	Used for CIPOS™ gate driver power
3.3V	3.3 V±5 %, Max 50 mA	Used for interface signal with control board and alarm signals as I_{TRIP}, FLT/EN
PCB characteristics		
Material	FR4, 1.6 mm thickness, 2-layers. 35 µm Copper thickness	
Dimension	90 mm x 75 mm	
System environment		
Ambient temperature	From 0 to 70°C	95 % RH max. Non-condensing

Figure 3 and Figure 4 are indicating the functional groups of the EVAL-M1-36-84A evaluation board.

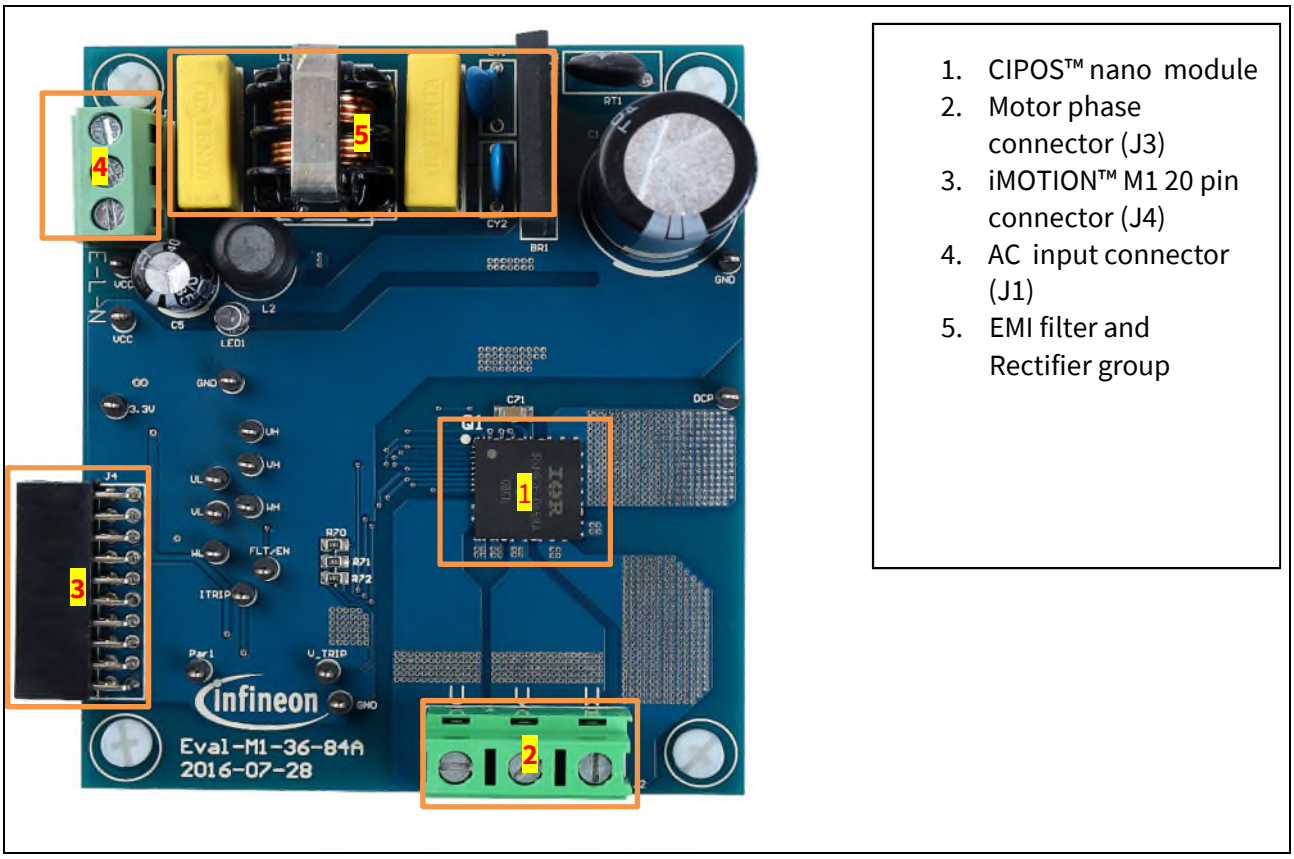

1. CIPOS™ nano module
2. Motor phase connector (J3)
3. iMOTION™ M1 20 pin connector (J4)
4. AC input connector (J1)
5. EMI filter and Rectifier group

Figure 3 Functional groups of the EVAL-M1-36-84A evaluation board's top side

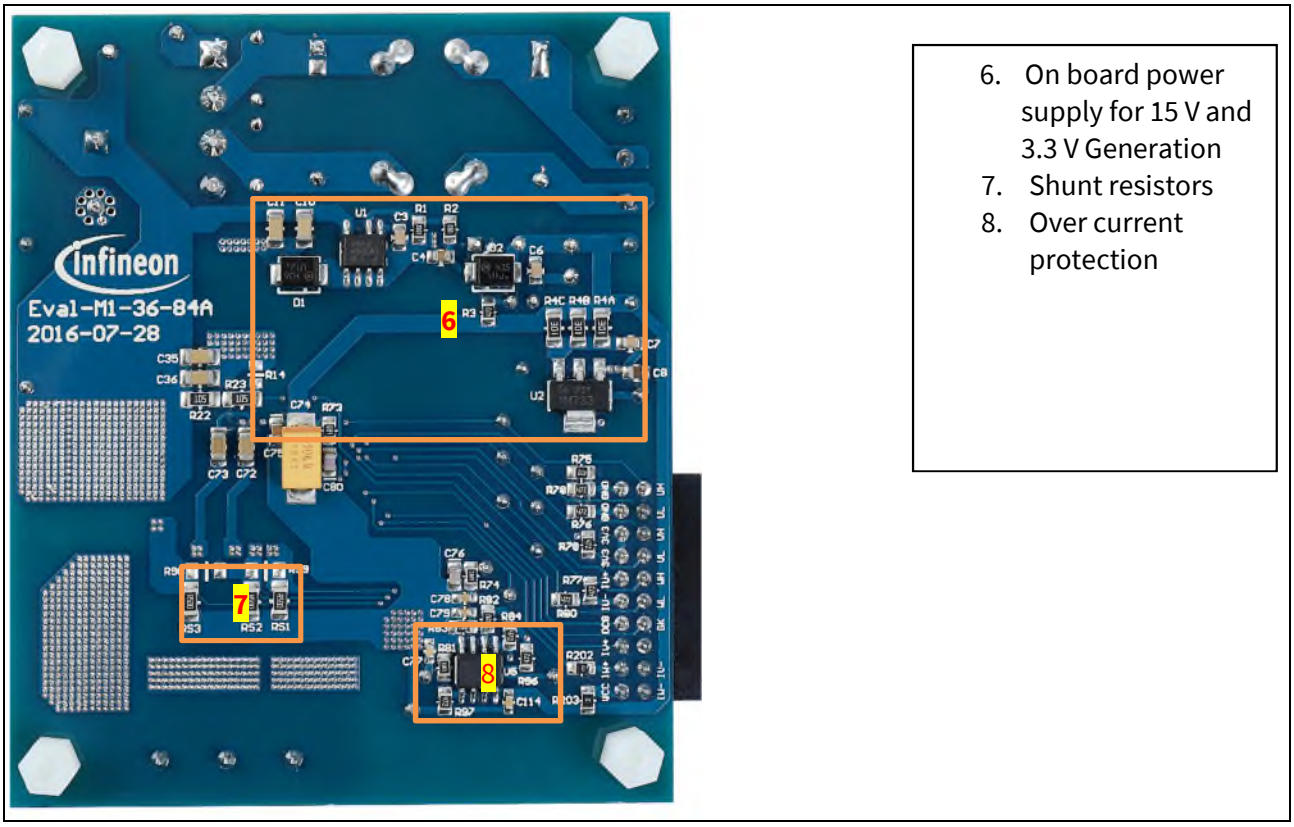

6. On board power supply for 15 V and 3.3 V Generation
7. Shunt resistors
8. Over current protection

Figure 4 Functional groups of the EVAL-M1-36-84A evaluation board's bottom side

4 Pin Assignments

General information about the connectors of the EVAL-M1-36-84A evaluation board is reported. Table 5 includes the details of the line connector J1-AC. It is possible to connect DC voltage to the AC connector. In this case a permanent DC-current will be conducted through the rectifier bridge. Maximum ratings are valid for AC as well as DC conditions. It is recommended to observe the temperature of the rectifier bridge. Due to the rectifier, DC supply's polarity at the connector is of no concern.

The evaluation board doesn't have a fuse. An external fuse is highly recommended during testing.

Table 5 J1- AC Line Connector

S. No.	Pin	Details
1	E	Earth ground
2	L	AC neutral input
3	N	AC line input

Table 6 denotes the details of the motor side connector J2.

Table 6 J2- Motor side connector

S. No.	Pin	Details
1	U	Connected to motor phase U
2	V	Connected to motor phase V
3	W	Connected to motor phase W

Pin Assignments

Table 7 registered the pin assignments of J4, iMOTION™ -M1 20 pin interface connector. This connector is the interface to the controller board.

Table 7 J4 –iMOTION™ M1 20 pin interface connector to connect Eval-M1-36-84A to controller board

Pin	Name	Connectors
1	PWMUH	3.3 V compatible logic input for high side gate driver-Phase1
2	GND	Ground
3	PWMUL	3.3 V compatible logic input for low side gate driver-Phase1
4	GND	Ground
5	PWMVH	3.3 V compatible logic input for high side gate driver-Phase2
6	+3.3V	On board 3.3 V supply
7	PWMVL	3.3 V compatible logic input for low side gate driver-Phase2
8	+3.3V	On board 3.3 V supply
9	PWMWH	3.3 V compatible logic input for high side gate driver-Phase3
10	IU+	Shunt voltage phase U
11	PWMWL	3.3 V compatible logic input for low side gate driver-Phase3
12	IU-	Ground
13	GK	Gate kill signal – active low when over current is detected
14	DCBSENSE	DC bus positive voltage, scaled in 0-3.3 V range by a voltage divider
15	VTH	Thermistor Output
16	IV+	Shunt voltage phase V
17	IV-	Ground
18	IW+	Shunt voltage phase W
19	IW-	Ground
20	VCC	15 V Supply

Input signals are active high. Pull-down resistors are not inserted on the EVAL-M1-36-84A board and need to be assembled on control cards. iMOTION™ MADK control cards are already equipped with pull-down resistors.

1. *Gate Kill signal (GK) is pulled low during over current condition. Chapter 6.3 explains the details of this circuit.*

5 Getting Started with EVAL-M1-36-84A

In order to run the motor system, a combination of the iMOTION™ MADK power board EVAL-M1-36-84A and the matching MADK control board (with M1 connector, EVAL-M1-101T for example in this chapter) is required. The iMOTION™ Software Tools MCEDesigner and MCEWizard are also required in order to initially setup the system, as well as to control and fine-tune the system performance to match users exact needs. This chapter provides more details on setting up the system and getting started with iMOTION™ MADK development platform.

5.1 Setting up the system

After downloading and installing the iMOTION™ PC Tools (MCEWizard and MCEDesigner), following steps need to be executed in order to run the motor. Refer to chapters 5.2.1 and 5.2.2 as well as MCEWizard and MCEDesigner documentation for more information.

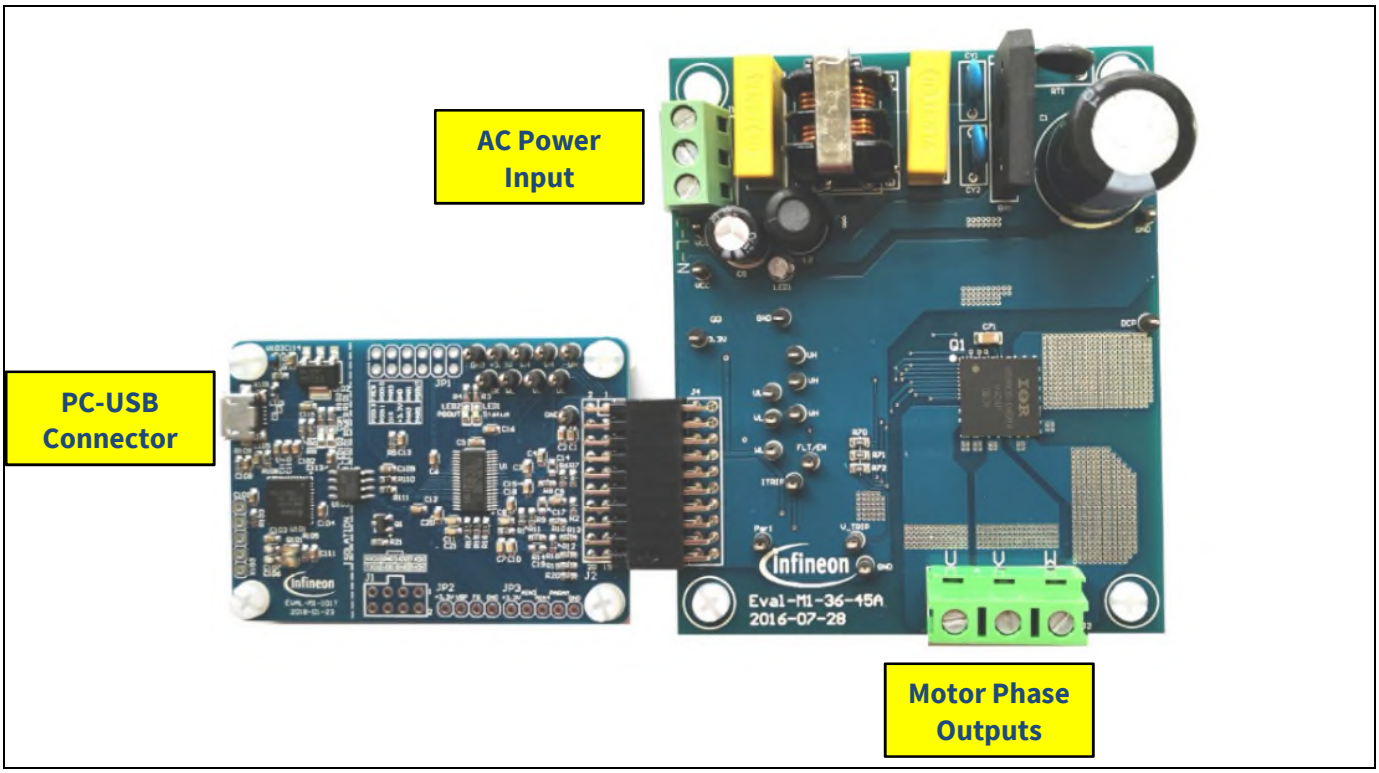

Figure 5 System connection example using EVAL-M1-101T and EVAL-M1-36-84A

1. Get the latest ”IMC101T-T038 MCE Software Package” available on www.infineon.com/imotion-software web page.
2. Connect PC-USB connector on the on-board-debugger to the PC via USB cable.
3. Connect EVAL-M1-101T’s M1 20-pin interface connector (J2) to power board (For example EVAL-M1-36-84A, see Figure 5).
4. Use MCEWizard to enter the target motor’s system and operating parameters, as well as evaluation board’s hardware parameters, which will then be used to calculate controller’s digital parameter set representing complete motor drive system. First click “Calculate” button on the “Verify & Save Page” and then save the drive parameter set into your project directory by clicking “Export to Designer file (.txt)”. Saved Drive System Parameter File will be later used by the MCEDesigner. Refer to Chapter 5.2.1 or MCEWizard User Guide for more details.
5. Connect motor phase outputs to the motor.

6. Connect AC power to power input connector and power on system.
7. Start MCEDesigner tool and open MCEDesigner default configuration file (.irc) for IMC101T-T038 controller (IMC101T_Vxxx.irc) by clicking “File” > “Open”. IMC101T_Vxxx.irc file is included in ”IMC101T-T038 MCE Software Package” downloaded in step 1.
8. MCEDesigner should automatically connect to the EVAL-M1-101T control board using default COM port (Indicated by green circle next to “COMx Up” status in the bottom frame of the MCEDesigner GUI). If it cannot establish the connection, change COM port by doing following steps: (“System” window active) > Preferences > Connection > Connect using (Chose one of the other available COM ports from the drop-down menu).
9. Use following steps to program the system parameters into the internal SRAM of iMOTION™ IC: Click “Tools” > “Programmer” and select “Program Parameters”. Browse and select the System Drive Parameters .txt file created in step 4. See chapter MCEDesigner setup overview 5.2.2 for more details.
10. Start the motor by clicking the green traffic light button in the control bar.

5.2 iMOTION™ development tools and software

The iMOTION™ Development Tool installers for MCEDesigner and MCEWizard are available for download via Infineon iMOTION™ website (http://www.infineon.com/imotion-software). All supported tools and software variants are listed there. Please visit this page periodically to check for tool/software updates.

Isolated on-board debugger provides the USB to UART bridge between the PC and the target iMOTION™ device with 1kV DC galvanic isolation between the motor drive system (hot side) and the PC/debugger (cold) side. On-board debugger uses the SEGGER J-Link driver for UART communication with IMC101T-T038. J-Link driver will be installed during the MCEDesigner installation. In case the driver is not installed properly, please go to SEGGER J-Link website to download and install the latest J-Link "Software and Documentation pack for Windows".

5.2.1 MCEWizard setup overview

After installing the MCEWizard, the shortcut for MCEWizard appears on the Windows desktop. Double click the shortcut to open the MCEWizard and configure the parameters for evaluation boards or motor. Figure 6 shows the "Welcome Page" for MCEWizard, where the MADK control board or power board can be selected through the pull-down list. Infineon keeps releasing new MADK controller and power boards. Therefore, it could happen that some of the newest power boards are not pre-configured in the MCEWizard tool and cannot be selected through the pull-down menu. In that case, the user should select any other power board (as similar as possible) and follow the MCEWizard setup steps by entering the parameter values which are specific to the chosen board. Make sure both "I have modified the circuit board" and "Enable advanced question" checkmarks are selected. Please refer to the Application Note of the corresponding power board for additional information.

After selecting the MADK control and the power board, start the MCEWizard system setup procedure by clicking the "Next" button in the right bottom corner as shown in Figure 6.

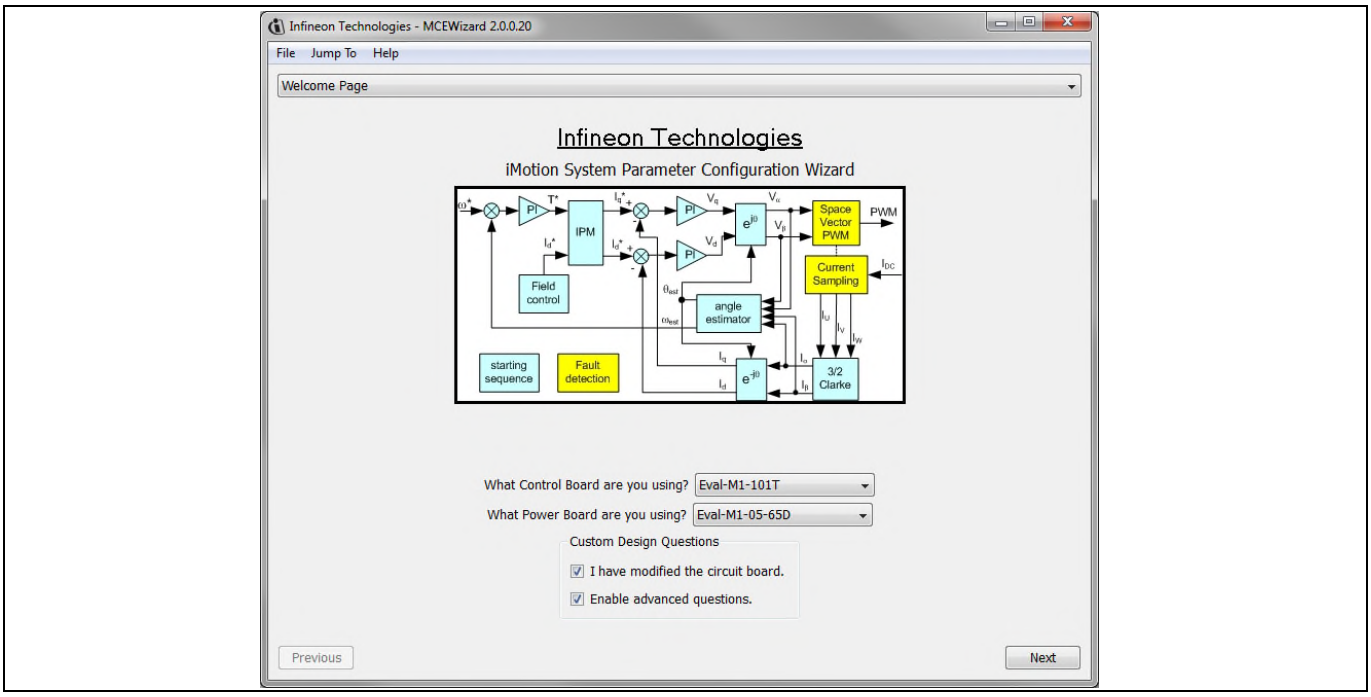

Figure 6 Welcome Page of MCEWizard

iMOTION™ MADK system enables users to easily test different combination of control and power board with their motors. User should be familiar with the system level parameters which are related to the motor used. There is a very limited number of parameters which are specific to the control board or power board hardware.

Table 8 provides the MCEWizard setup overview for hardware related parameters specific to EVAL-M1-36-84A power board. Similar tables will be available in each control board's Application Note. Combination of this table and the corresponding table of the control board provides enough information to setup the MADK-based motor drive system in shortest time.

Table 8 MCEWizard setup overview table

Page	Parameter	Value	Comment
Welcome Page	Control Board selecting	EVAL-M1-101T for example	
Welcome Page	Power Board selecting	EVAL-M1-36-84A	If no, select similar power board to modify
Options Page	Motor 1 Shunt Configuration	Leg shunt	
Question 3	Controller Supply Voltage	+3.3V	VDD is 3.3V by default
Question 19	Max DC Bus Voltage	200V	
Question 23	DC Bus Sensing High Resistor	2000 kΩ	
Question 24	DC Bus Sensing Low Resistor	Refer to the control board user manual	
Question 54	NTC Temperature Shutdown value	Refer to the control board user manual	
Question 63	GateSense Low-Side Devices	High is true	
Question 64	GateSense High-Side Devices	High is true	
Question 69	Motor 1 Current Input	Calculated in the corresponding Section in control board user manual	

After all the MCEWizard questions are answered, the "Verify & Save Page" will be shown as in Figure 7.

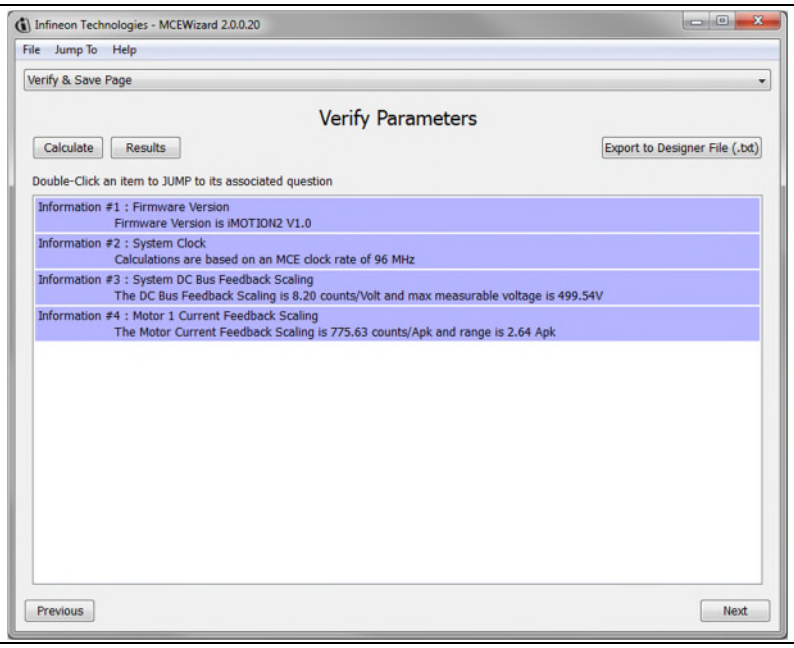

Figure 7 Verify and Save page for MCEWizard

Click "Calculate" button and "Export to Designer File (.txt)" button to save the parameter file which will be used by the MCEDesigner in the next steps.

5.2.2 MCEDesigner setup overview

After installing MCEDesigner installer, there is a shortcut for MCEDesigner on Windows desktop. Double click the shortcut to open MCEDesigner and then open “IMC101T_xx.irc” file as shown in Figure 8.

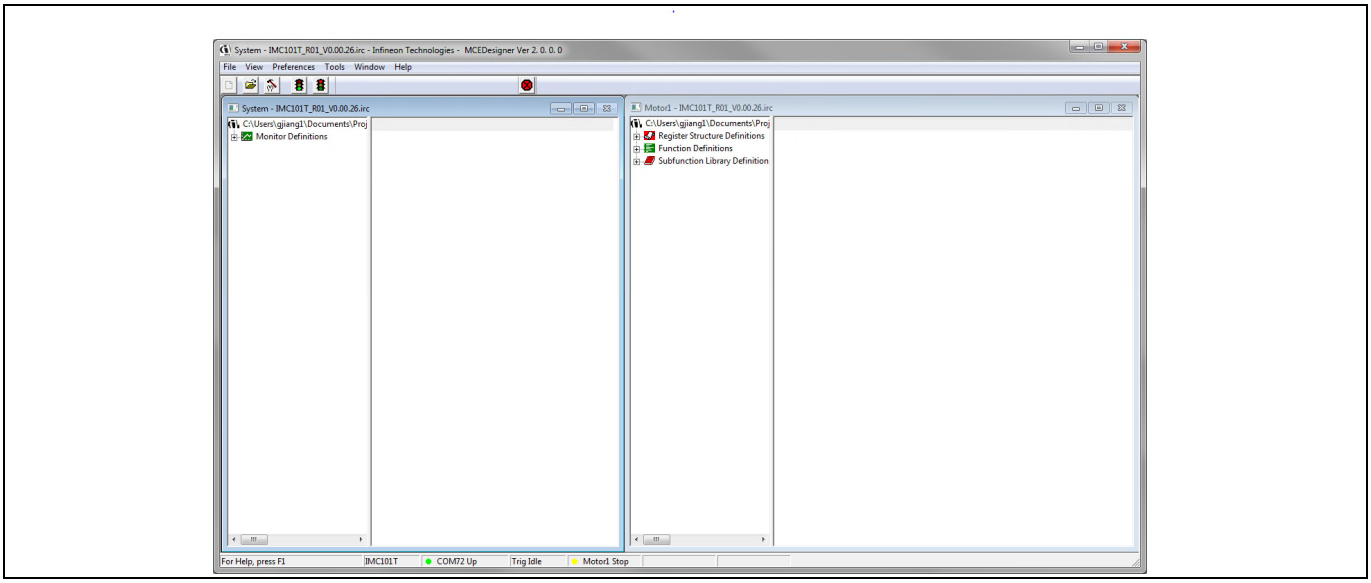

Figure 8 MCEDesigner’s Main Display for EVAL-M1-101T

To program Drive System Parameter file into IMC101T-T038, please click “Tools” menu and select “Programmer” in the pull down list. The pop-up window “Program IMC controller” will show up as in Figure 9. Click on the “Program Parameters” radio button (this is the default option), and then select the Drive System Parameter file created using MCEWizard by clicking on “Browse”. Finally, click on the “Start” button to program the parameter file into the IMC101T-T038 IC.

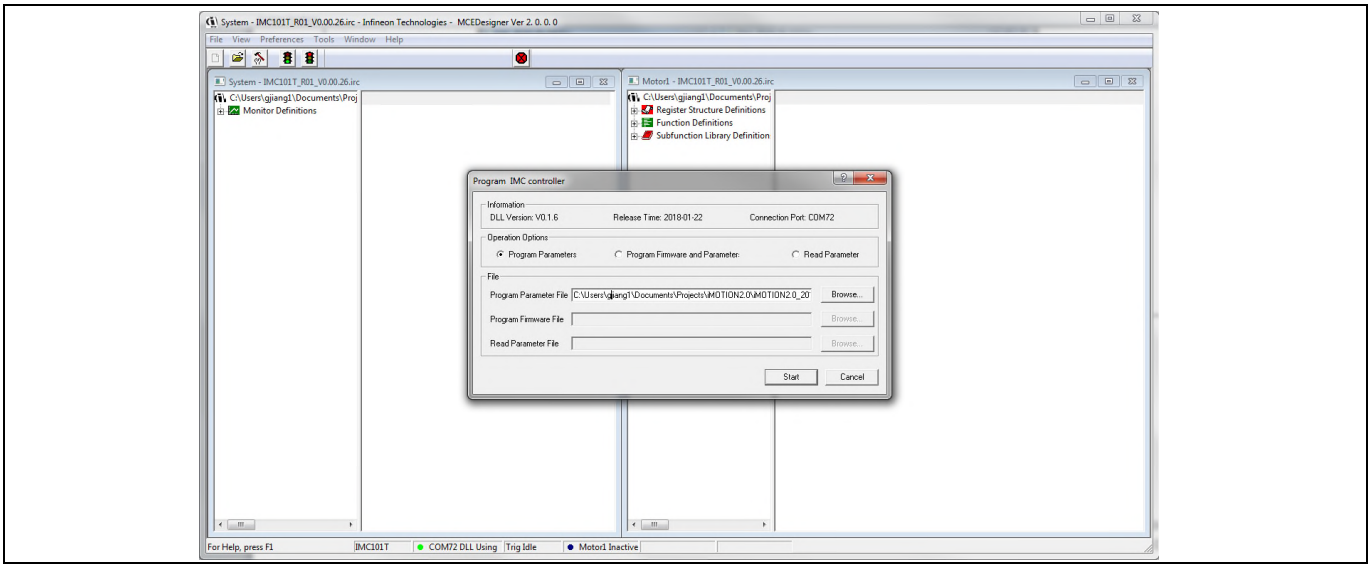

Figure 9 “Program IMC Controller” pop-up window

After Drive System Parameter file has been programmed into IMC101 controller, and the motor drive system is powered, the MCEDesigner can be used to start/stop the motor, display motor current traces, change the motor

speed, modify drive parameters and many other functions. Please refer to the MCEDesigner documentation for more details.

Note: *On-board Debugger portion of EVAL-M1-101T is galvanically isolated from the controller portion and the attached power board. In order to program the parameters or firmware to the IMC101T-T038 controller, the 3.3V DC voltage needs to be supplied to the controller portion of the EVAL-M1-101T. This voltage can either be supplied by the power board (MADK power boards are designed to supply the 3.3V to the control board through M1 or M3 connector) or by feeding the 3.3V DC voltage to the control board through some of the available 3.3V access/test points if the power board is not attached to the EVAL-M1-101T control board.*

To program new firmware and Drive System Parameter into IMC101T-T038, please click “Tools” menu and select “Programmer” in the pull down list. The pop-up window “Program IMC controller” will show up as in Figure 10. Click on the “Program Firmware and Parameter” radio button, and select the Drive System Parameter file created using MCEWizard by clicking on the “Browse” button on the row of “Program Parameter File”, and then select the firmware file by clicking on the “Browse” button on the row of “Program Firmware File”. Finally, click on the “Start” button to program the parameter file into the IMC101T-T038 IC.

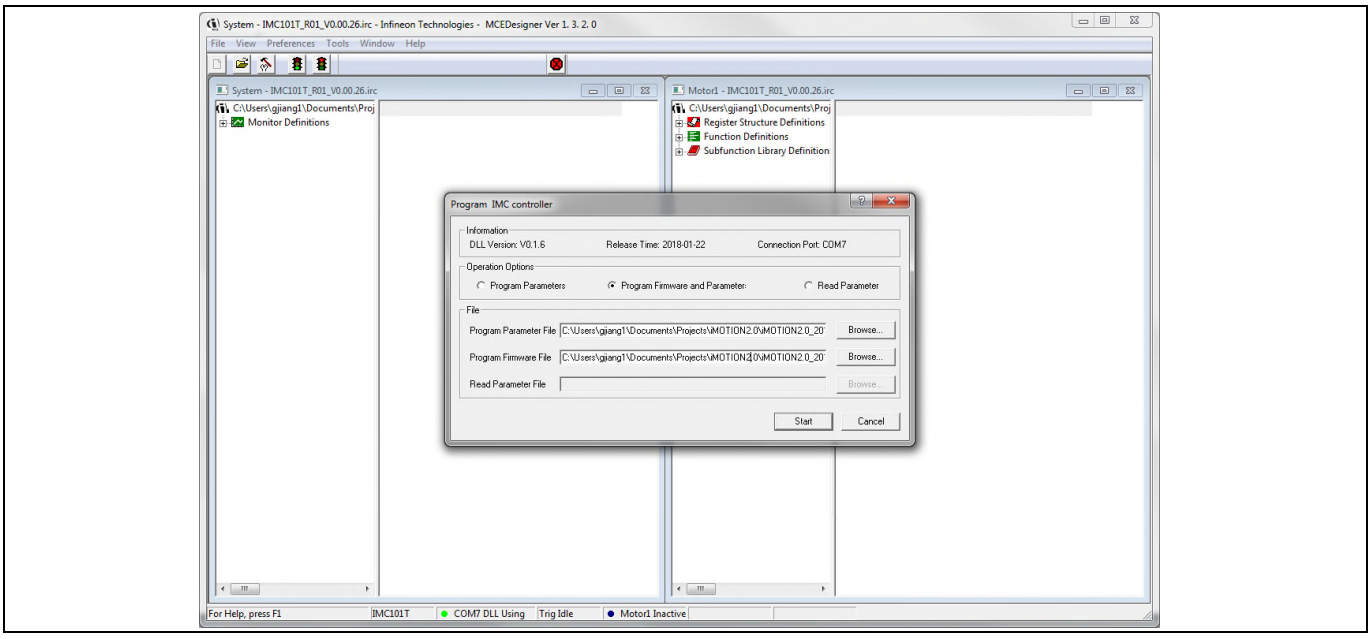

Figure 10 Program Firmware and Parameter in “Program IMC Controller” pop-up window

All the latest firmware files for different types of iMOTION™ motor control ICs are available for download via Infineon iMOTION™ website (http://www.infineon.com/imotion-software).

6 Schematics and Layout

To meet individual customer requirements and make the EVAL-M1-36-84A evaluation board a basis for development or modification, all essential technical data like schematics, layout and components are included in this chapter. Get in contact with our technical support team to get more detailed information and the latest Gerber-files.

6.1 DC-Link Voltage Measurement

Pin 14 of connector J4 provides access to the DC-link voltage. Three possible feedback cases are associated with this pin. Figure 11 provides the DC bus sense resistor details. By default, the resistor R14 is not mounted on EVAL-M1-36-84A. There must be a pull-down resistor mounted on the corresponding controller board.

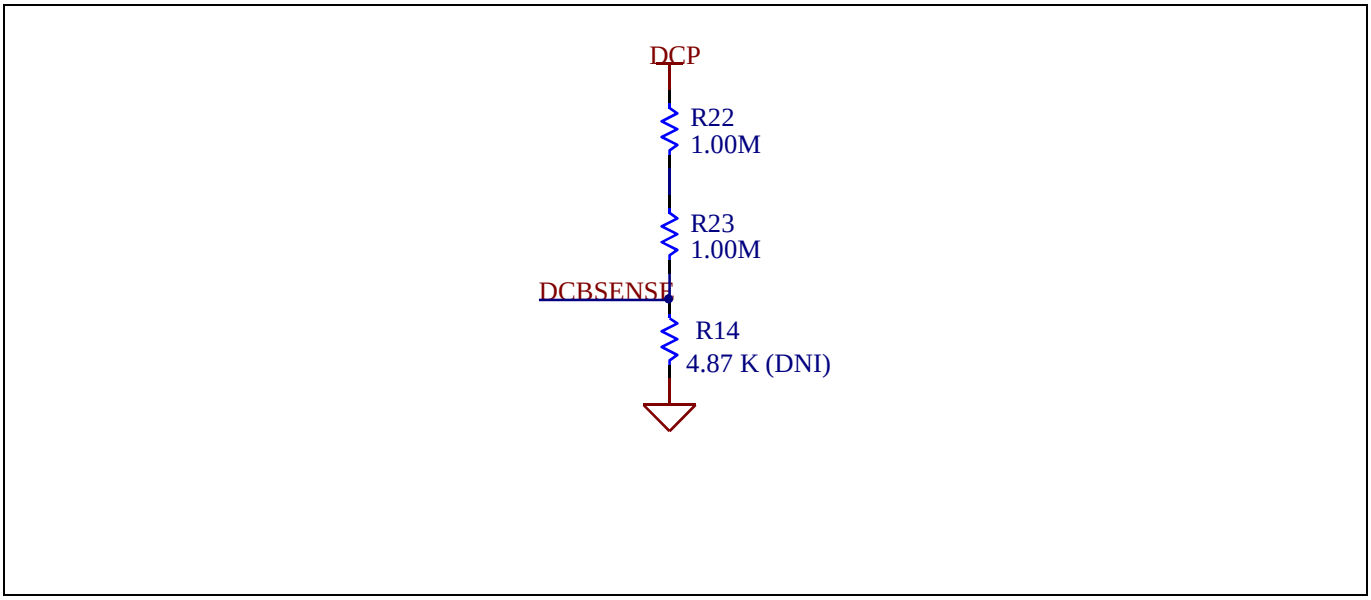

Figure 11 DC bus sense resistors in EVAL-M1-36-84A evaluation board

6.2 Inverter section using CIPOS™ Nano IPM

The inverter section is implemented using the CIPOS™ as displayed in Figure 12. The module includes six power MOSFETs and three half bridge gate drivers.

The three capacitors C71, C72 and C73 are used as bootstrap capacitors to provide the necessary floating supply voltages V_{BS1}, V_{BS2} and V_{BS3} respectively.

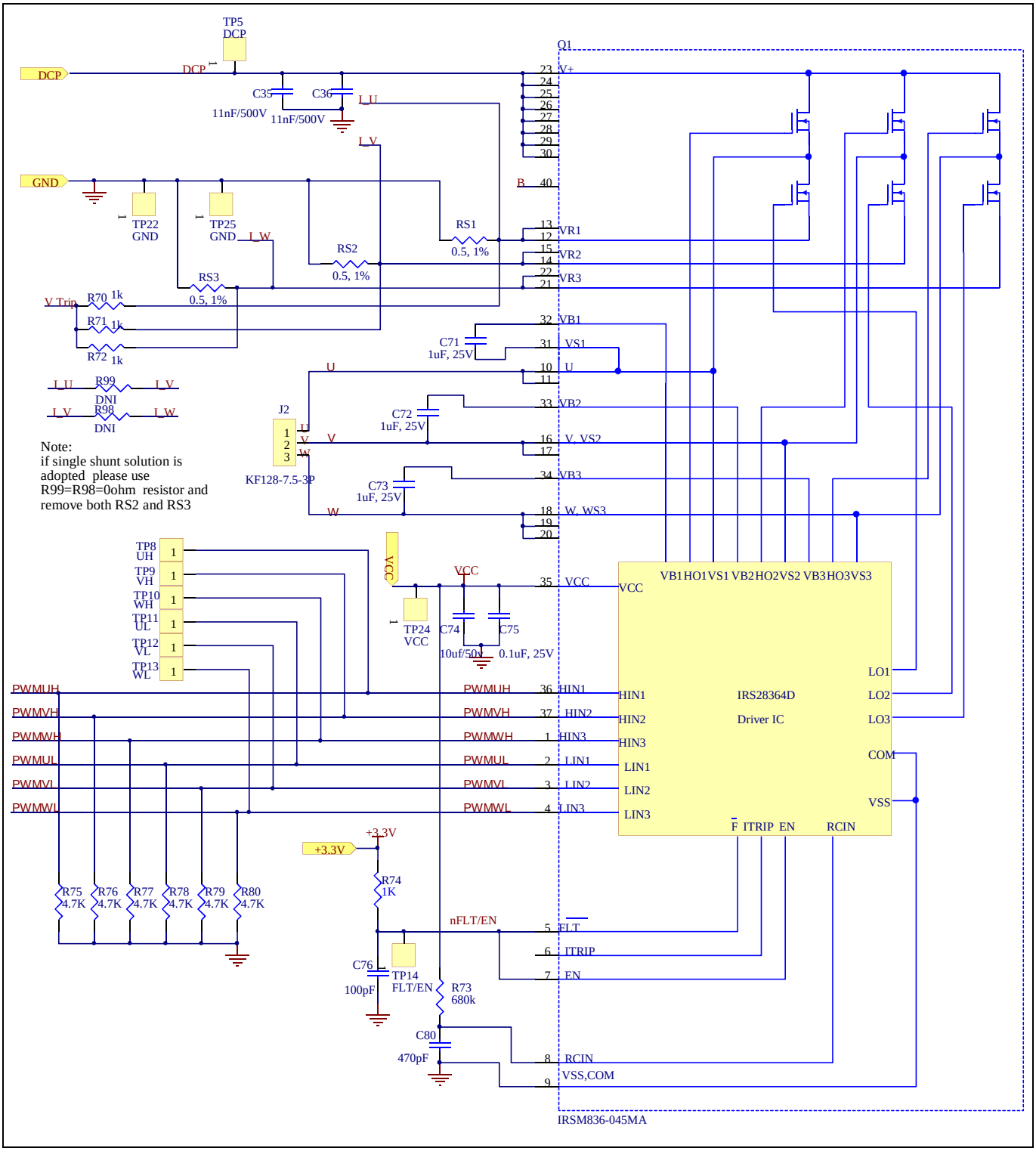

Figure 12 Schematic of the 3-phase inverter section using CIPOS™ Nano IPM on EVAL-M1-36-84A board

6.3 Current Measurement and Over Current Circuit

The resistors RS1 to RS3 are purposed to generate a voltage proportional to the emitter current. These voltages are available at 20 pin interface connector to give feedback to the controller. In combination with resistors R70 to R72 they are used to generate common current signal V_TRIP for all three phases. V_TRIP is always on highest level of all three phase current. This signal is used to generate gate-kill signal I_TRIP.

Figure 13 is the over current circuitry shown. Capacitor C77 and resistor R81 are filtering voltage spikes and noise on V_TRIP to avoid incident turn off.

The comparator threshold can be set through the voltage divider provided by resistors R82 and R83. By default for emitter-shunt trip, R7 is 1kΩ. In single shunt application R7 needs to be changed to 3.48kΩ.

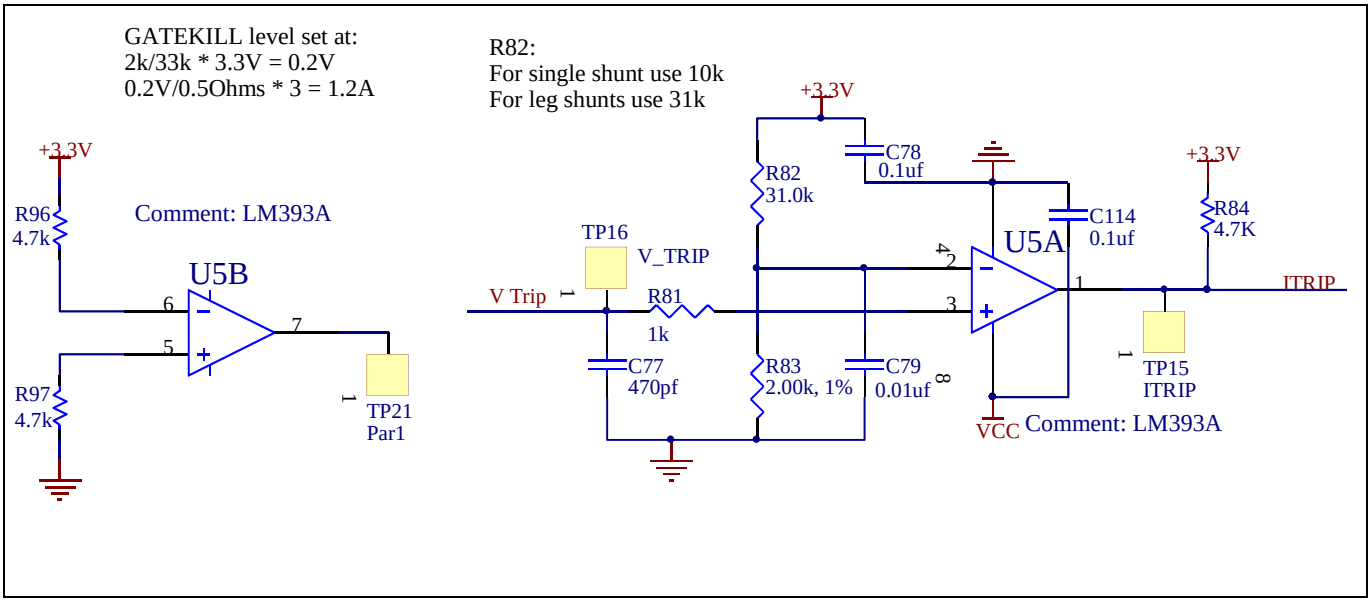

Figure 13 Over current protection circuit on the EVAL-M1-36-84A evaluation board

6.4 Auxiliary Power supply

Figure 14 reports the schematic of the power supply available on the EVAL-M1-36-84A board. The circuit includes LNK304 that is used to generate 15V (V_{CC}) directly from the DC bus. V_{CC} is connected to the gate drivers inside the CIPOS™ IPM.

The linear regulator LD1117S33 generates 3.3V from V_{CC}. The 3.3V power supply is used in the over current comparator circuit. LED1 is used to indicate whether the board is powered or not. Both V_{CC} and 3.3V are also provided on the 20 pin interface connector J4 to feed circuitry on the controller board.

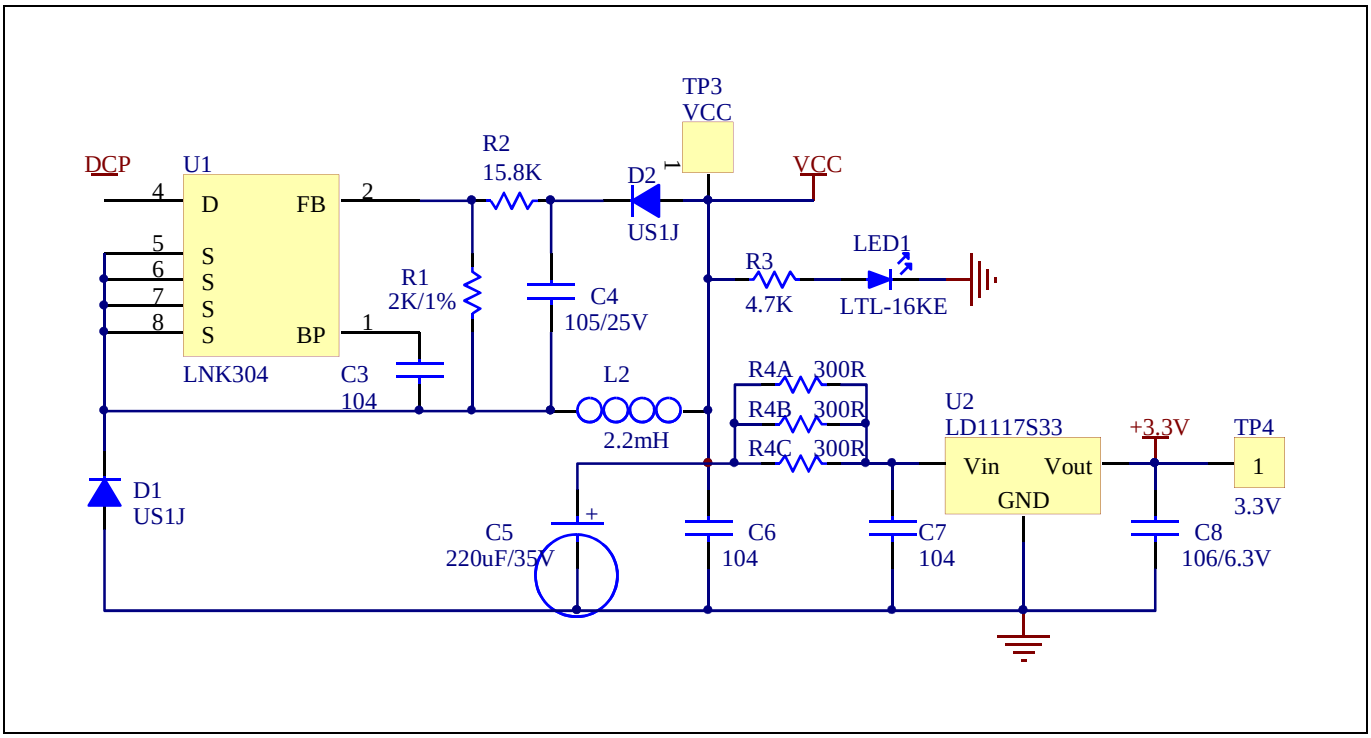

Figure 14 Power supply section of the EVAL-M1-36-84A evaluation board

6.5 PCB Layout

The layout of this board can be used for different voltage or power classes. The power PCB is a two layer PCB.

Get in contact with our technical support team to get more detailed information and the latest Gerber-files.

Figure 15 illustrates the top assembly print of the evaluation board.

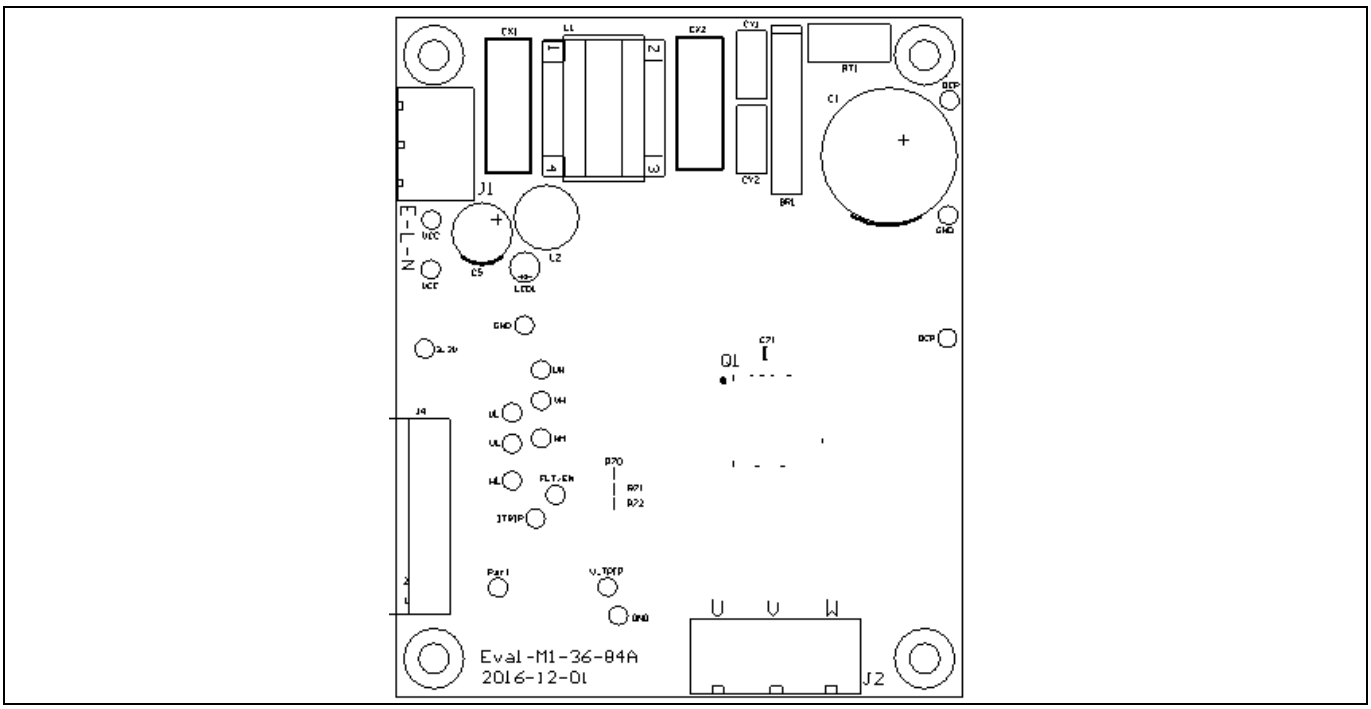

Figure 15 Top assembly print of the EVAL-M1-36-84A evaluation board

Figure 16 depicts the bottom assembly print of the evaluation board.

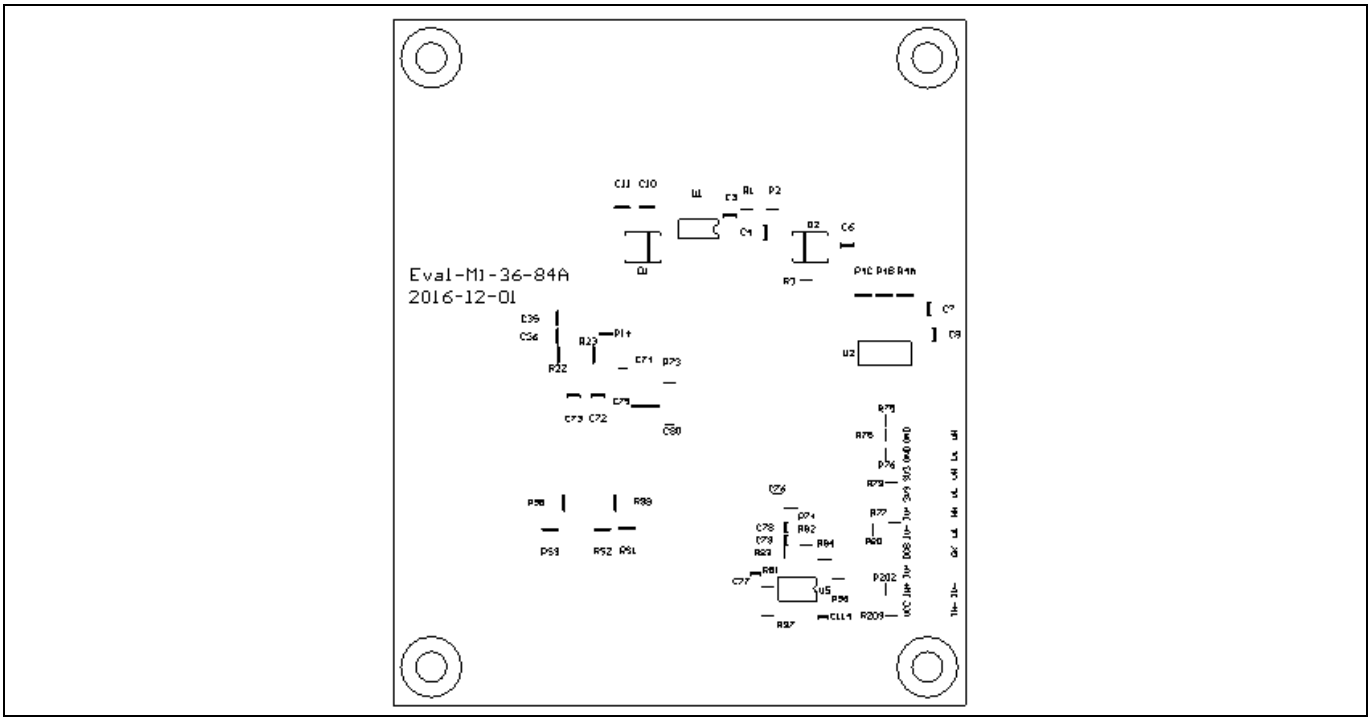

Figure 16 Bottom assembly print of the EVAL-M1-36-84A evaluation board

The top layer routing of the PCB is provided in Figure 17 .

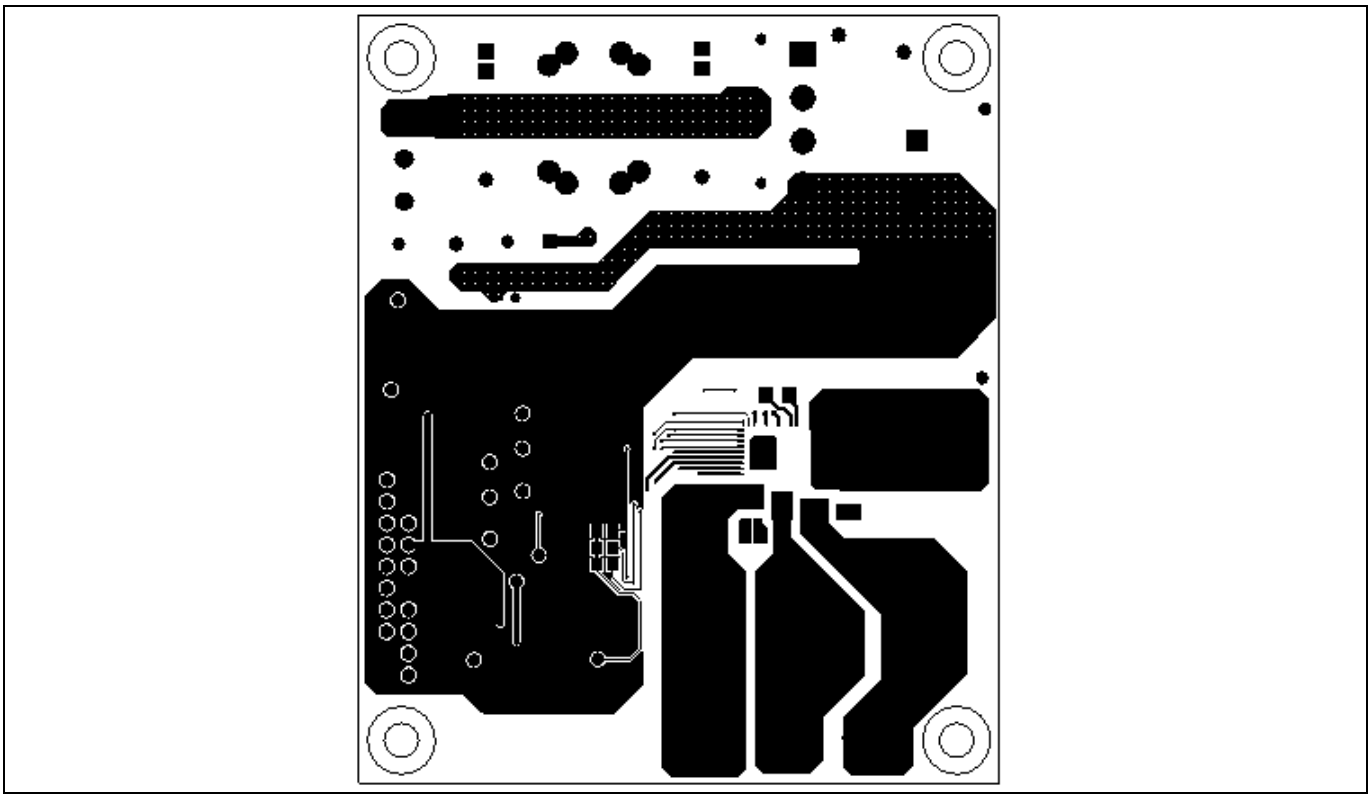

Figure 17 Top layer routing details of EVAL-M1-36-84A

Figure 18 illustrates the bottom layer routing details.

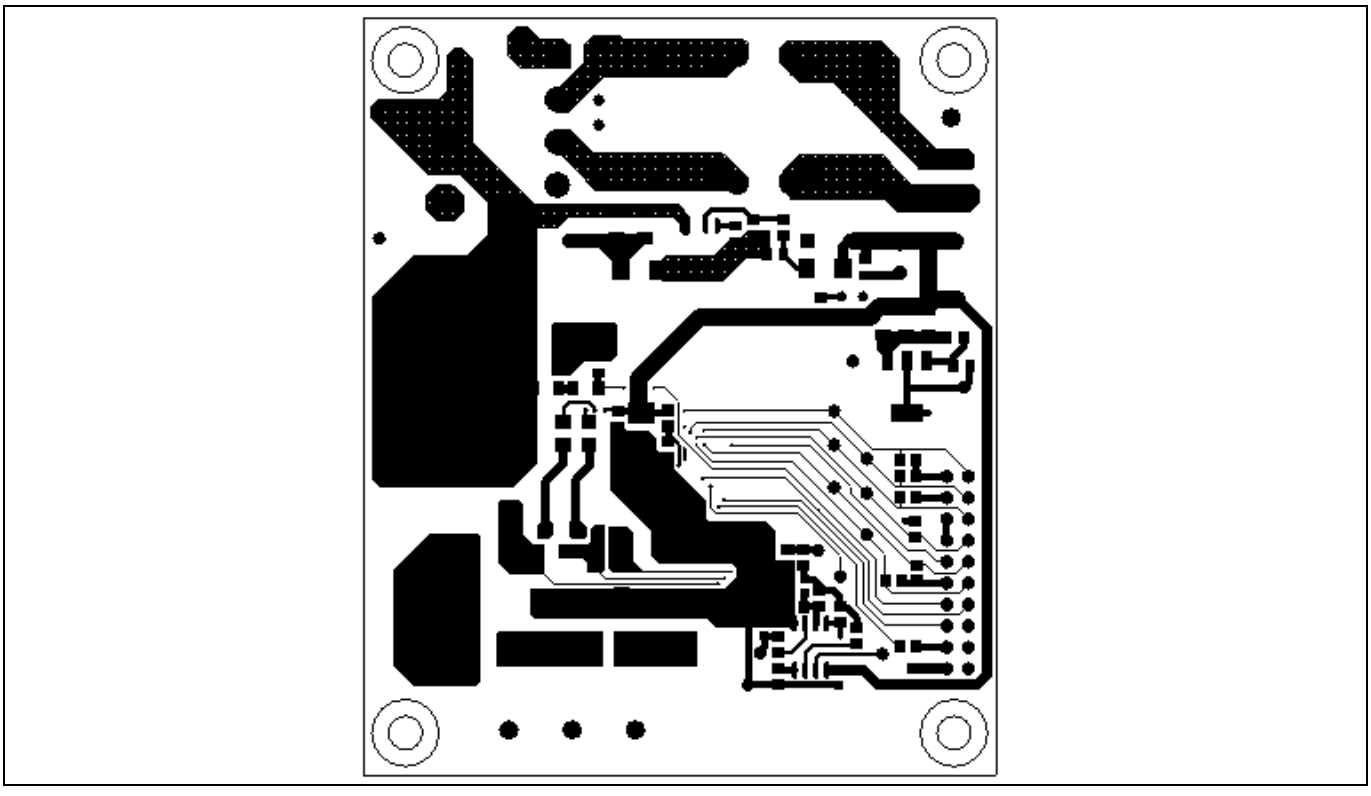

Figure 18 Bottom layer routing details of EVAL-M1-36-84A

7 Bill of Materials of EVAL-M1-36-84A

Table 9 provides the complete bill of materials of the evaluation board.

Table 9 Bill of materials

No.	Qty	Part description	Designator	Part number	Manufacturer
1	1	RECT BRIDGE GPP 4A 600V GBU	BR1	GBU406	DIODES INCORPORATED
2	1	CAP ALUM 100µF 20% 400V RADIAL	C1	860021380020	Wurth Electronics Inc.
3	1	CAP CER 1µF 25V X7R 0805	C4	885012207078	Wurth Electronics Inc.
4	1	CAP ALUM 220µF 20% 35V RADIAL	C5	860020574012	Wurth Electronics Inc.
5	1	CAP CER 10µF 6.3V X7R 0805	C8	885012107004	Wurth Electronics Inc.
6	4	CAP CER 0.012µF 500V X7R 1206	C10, C11, C35, C36	1206J5000123MDR	Knowles Syfer
7	3	CAP CER 1µF 25V X7R 1206	C71, C72, C73	885012208064	Wurth Electronics Inc.
8	1	CAP TANT 10µF 25V 10% 2917	C74	T491D106K025AT	Kemet
9	4	CAP CER 0.1µF 25V X7R 0805	C75,C3, C6, C7	885012207072	Wurth Electronics Inc.
10	1	CAP CER 100pF 50V X7R 0805	C76	885012207080	Wurth Electronics Inc.
11	1	CAP CER 470 pF 50V X7R 0603	C77	885012006061	Wurth Electronics Inc.
12	2	CAP CER 0.1µF 25V X7R 0603	C78, C114	885012206071	Wurth Electronics Inc.
13	1	CAP CER 10000 pF 25V X7R 0603	C79	885012206065	Wurth Electronics Inc.
14	1	CAP CER 470pF 50V X7R 0805	C80	885012007061	Wurth Electronics Inc.
15	2	CAP FILM 0.1µF 20% 275VAC RADIAL	CX1, CX2	890324025017CS	Wurth Electronics Inc.
16	2	CAP CER 2200pF 250VAC RADIAL	CY1, CY2	DE2E3KY222MN3AM02F	MURATA ELECTRONICS
17	2	Diode Standard 600V 1A Surface Mount SMA	D1, D2	US1J-13-F	Diodes Incorporated
18	1	SERIE 2165S - 5.08 MM - HORIZONTAL CABLE ENTRY WITH RISING CAGE CLAMP - WR-TBL	J1	691216510003S	Wurth Electronics Inc.

Bill of Materials of EVAL-M1-36-84A

No.	Qty	Part description	Designator	Part number	Manufacturer
19	1	SERIE 2169 - 7.50 MM - HORIZONTAL CABLE ENTRY WITH RISING CAGE CLAMP - WR-TBL	J2	691216910003	Wurth Electronics Inc.
20	1	2.54MM ANGLED DUAL SOCKET HEADER	J4	613020243121	Wurth Electronics Inc.
21	1	8103-RC	L1	JWMILLER_8103	Bourns, Inc.
22	1	FIXED IND 2.2mH THROUGH HOLE	L2	RLB0914-222KL	Bourns Inc.
23	1	LED RED CLEAR ROUND T/H	LED1	151034RS03000	Wurth Electronics Inc.
24	1	IC MOTOR DRIVER PAR 37-PQFN	Q1	IRSM836-084MA	Infineon Technologies
25	1	RES SMD 4.87 kΩ 1% 1/8W 0805 (DIN)	R14	RC0805FR-074K87L	Yageo
26	2	RES SMD 1 MΩ 1% 1/4W 1206	R22, R23	RCL06121M00JNEA	Yageo
27	5	RES SMD 1kΩ 1% 1/8W 0805	R70, R71, R72, R74, R81	RC0805FR-071KL	Yageo
28	1	RES SMD 680kΩ 5% 1/8W 0805	R73	RC0805JR-07680KL	Yageo
29	10	RES SMD 4.7 kΩ 1% 1/8W 0805	R3, R75, R76, R77, R78, R79, R80, R84, R96, R97	RC0805FR-074K7L	Yageo
30	1	RES THICK FILM SMD 0805 1% 31kΩ	R82	RC0805FR-0731K6L	Yageo
31	2	RES SMD 2kΩ 1% 1/8W 0805	R83,R1	RC0805FR-072KL	Yageo
32	1	RES SMD 15.8kΩ 1% 1/8W 0805	R2	RC0805FR-0715K8L	Yageo
33	3	RES SMD 300Ω 5% 1/4W 1206	R4A, R4B, R4C	RC1206JR-07300RL	Yageo
34	2	RES SMD 0 Ω JUMPER 1/8W 0805	R202, R203	0805J0000T5E	Yageo
35	3	RES SMD 0.5Ω 1% 1/4W 1206	RS1, RS2, RS3	RL1206FR-070R5L	Yageo
36	1	NTC 15Ω 9MM DIA	RT1	NTC15D-9	SHIN-HANG
37	1	IC OFFLINE SWITCHER	U1	LNK304DN-TL	POWER INTEGRATIONS
38	1	IC REG LINEAR 3.3V 1A SOT223-4	U2	IFX1117MEV33HTMA1	Infineon Technologies
39	1	IC DUAL DIFF	U5	LM393ADR	Texas Instruments

No.	Qty	Part description	Designator	Part number	Manufacturer
		COMPARATOR 8-SOIC			
40	18	TEST POINT PC MINI .040"D WHITE	TP1, TP4, TP2, TP3, TP5, TP8, TP9,TP10, TP11,TP12, TP13,TP14, TP15,TP16, TP21, TP24, TP22, TP25,	5002	Keystone Electronics

8 Reference

[1] Datasheet of Infineon IPM IRSM836-084MA, is available for download on Infineon's website

[2] Application Note AN2009-10 Using the NTC inside a power electronic module, is available for download on Infineon's website

[3] EVAL-M1-101T User Manual is available for download on Infineon's website

[4] EVAL-M1-183M User Manual is available for download on Infineon's website

Note: All listed reference materials are available for download on Infineon's website www.infineon.com/. All the iMOTION MADK evaluation board's User Manuals are available at www.infineon.com/MADK

Revision History

Major changes since the last revision

Version number	Revision Date	Revision description
1.0	2017-04-25	First release
1.1	2018-07-09	Update BOM. Add WE Part Number, and add Getting Started with EVAL-M1-36-84A
1.2	2018-09-23	Change DC input to AC input. Update photo

Trademarks of Infineon Technologies AG
µHVIC™, µIPM™, µPFC™, AU-ConvertIR™, AURIX™, C166™, CanPAK™, CIPOS™, CIPURSE™, CoolDP™, CoolGaN™, COOLiR™, CoolMOS™, CoolSET™, CoolSiC™, DAVE™, DI-POL™, DirectFET™, DrBlade™, EasyPIM™, EconoBRIDGE™, EconoDUAL™, EconoPACK™, EconoPIM™, EiceDRIVER™, eupec™, FCOS™, GaNpowIR™, HEXFET™, HITFET™, HybridPACK™, iMOTION™, IRAM™, ISOFACE™, IsoPACK™, LEDrivIR™, LITIX™, MIPAQ™, ModSTACK™, my-d™, NovalithIC™, OPTIGA™, OptiMOS™, ORIGA™, PowIRaudio™, PowIRStage™, PrimePACK™, PrimeSTACK™, PROFET™, PRO-SIL™, RASIC™, REAL3™, SmartLEWIS™, SOLID FLASH™, SPOC™, StrongIRFET™, SupIRBuck™, TEMPFET™, TRENCHSTOP™, TriCore™, UHVIC™, XHP™, XMC™

Trademarks updated November 2015

Other Trademarks
All referenced product or service names and trademarks are the property of their respective owners.

Edition 2018-09-23

Published by

Infineon Technologies AG

81726 Munich, Germany

© 2019 Infineon Technologies AG. All Rights Reserved.

Do you have a question about this document?

Email: erratum@infineon.com

Document reference
AN2016-16 EVAL-M1-36-84A User Manual

IMPORTANT NOTICE
The information contained in this application note is given as a hint for the implementation of the product only and shall in no event be regarded as a description or warranty of a certain functionality, condition or quality of the product. Before implementation of the product, the recipient of this application note must verify any function and other technical information given herein in the real application. Infineon Technologies hereby disclaims any and all warranties and liabilities of any kind (including without limitation warranties of non-infringement of intellectual property rights of any third party) with respect to any and all information given in this application note.

The data contained in this document is exclusively intended for technically trained staff. It is the responsibility of customer's technical departments to evaluate the suitability of the product for the intended application and the completeness of the product information given in this document with respect to such application.

For further information on the product, technology, delivery terms and conditions and prices please contact your nearest Infineon Technologies office (**www.infineon.com**).

Please note that this product is not qualified according to the AEC Q100 or AEC Q101 documents of the Automotive Electronics Council.

WARNINGS
Due to technical requirements products may contain dangerous substances. For information on the types in question please contact your nearest Infineon Technologies office.

Except as otherwise explicitly approved by Infineon Technologies in a written document signed by authorized representatives of Infineon Technologies, Infineon Technologies' products may not be used in any applications where a failure of the product or any consequences of the use thereof can reasonably be expected to result in personal injury.