Solve PCB thermal expansion issues with new rad hard discrete SMD-0.5e package

Authors: Michael F. Thompson, Shunhe Xiong and Jerry Dube

About this document

Scope and purpose

This application note presents the improvements inherent in International Rectifier HiRel (IR HiRel)'s new SMD-0.5e package.

Intended audience

This document is intended for applications engineers and designers looking for radiation-hardened (rad hard) power discrete solutions for space and other harsh environment applications where long-term reliability related to thermal expansion is a concern. The goal of this application note is to guide the designer in selecting the right package to suit the needs and constraints of the application.

Table of contents

About this document 1
Table of contents 2
1 Introduction 3
2 A summary of the design challenges 4
3 Existing solutions for SMD-0.5 7
4 The SMD-0.5e: a better solution 10
5 Qualification testing 15
6 Results of qualification 17
7 Application 18
8 Conclusions 19
9 References 20
Revision history 21

1 Introduction

IR HiRel would like to present this document to describe the improvements inherent in our new SMD-0.5e package (the “e” designates the enhanced version of our legacy SMD-0.5 package). The package SMD-0.5 has been an industry standard and is one of the most popular package for power discretes, owing to its optimum size and performance that fits into power electronics applications in satellites and spacecrafts. With a footprint of 10.3 x 7.7 mm^2 , the package supports a wide voltage class ranging from 20V to 650V. The fit-form-functional equivalent SMD-0.5e package addresses applications including DC-DC converters, motor drives, electric propulsion, protection circuits, active OR-ing as well as battery management systems.

Due to material differences between circuit boards and the large power devices assembled onto those boards, there is a significant challenge to maintain reliable solder joints between the two, and to preserve the sealed integrity of highly reliable, hermetically packaged devices. The new package, as described in this application note, provides a means whereby a more optimal solution can be achieved in a simpler, more cost-effective manner. Direct mounting can now be more easily implemented for high-reliability space missions with severe thermal cycling as part of the mission profile.

The new package design implements several features for our radiation hardened (rad hard) power MOSFETs to allow for relief of thermally-induced stress in the solder joint between the circuit board and the device package itself. This application note will follow this general outline:

- Briefly describe the general problem of thermal mismatch for our rad hard discretes
- Review some of the prior art that allowed for a solution to this problem
- Show the new package and describe the mechanical features of interest
- Describe the environmental qualifications of the new SMD-0.5e package as mounted on a printed circuit board (PCB)
- Summarize the benefits of the new package for rad hard devices and present an application reference of the solder pad layout used in our own qualification of the part

2 A summary of the design challenges

It is inherent property of materials to change their dimensions by expanding and contracting with temperature changes. It is the difference between materials' expansion that gives rise to the stress and strain that can cause problems in assemblies.

For example, consider only one linear dimension of a material. Metals, ceramics, and printed circuit boards (PCB, such as FR-4 & polyimide) will expand at different rates for incremental positive changes in material temperature. The change in length of a material due to a change in temperature is defined [1] by the equation

$$\Delta l = \alpha \cdot l_0 \cdot \Delta T \qquad [1]$$

where l is the material length, α is the coefficient of linear expansion in units of 10^{-6}/K (or ppm/K) and ΔT is the change in temperature in Kelvin. So, for an α of 100 ppm/K there would be a 0.01% change in the length of a material. This does not seem to be of concern by itself, until one considers this question: when is the expansion too small to cause problems for a highly reliable power connection? Even small deflections result in stress and strain that are a recipe for problems. Coefficients of thermal expansion for various materials as used in IR HiRel analyses are shown below in Table 1.

Table 1 Material properties used in analyses

Material	α (10^{-6}/K)
Copper [2]	17-18
FR-4 circuit board [3]	13-14
Polyimide circuit board [4]	17-18

A one-dimensional analysis is an oversimplification for this real-world application. Material expansion occurs in all three dimensions, and those relative movements of objects which would ideally remain fixed (and electrically attached) can integrate over area and volume to create a significant problem.

PCBs are not uniformly constructed, they are laminated. Complexity of the problem increases as the copper traces, reinforcement fiber, and epoxy or polyimide (the resins holding the layers together) are taken into consideration.

The previous discussion only considers uniform thermal expansion, although in reality expansion coefficients themselves can be a function of temperature.

IR HiRel power devices are housed in hermetic packages made mostly from a combination of metals, ceramics, and glass. Ceramic and glass have a coefficient of thermal expansion (CTE) around 6 ppm/K, and most PCBs have CTEs in the aforementioned range of 13-14 ppm/K (FR-4 board) or 17-18 ppm/K (polyimide board). The large CTE mismatch between ceramic/glass and PCB materials poses major challenges in the design of hermetic packages for power devices.

There is a fundamental difference between metal and ceramic/glass: metal is ductile and ceramic/glass are brittle. When subject to large levels of stress, metal will yield and experience large strain without breaking, whereas ceramic/glass will not yield: it will just crack. This "make-or-break" property of ceramic/glass adds another challenge to the design of hermetic packages.

Furthermore, power devices usually carry large current and dissipate a lot of heat, even with chips that have high efficiency. In order to dissipate heat, some stress relief designs such as a J-lead or a gull-wing lead cannot be used, because they do not carry large amount of heat. And in this case, power densities are increasing as IR HiRel continues to offer improved die technology, thus making heat flux and the package design more challenging. In other words, it is hard to satisfy electrical, mechanical, and thermal requirements simultaneously.

Due to the above challenges, it is extremely difficult to make large surface mount hermetic power package compatible with most common PCBs that experience an extreme range of temperatures. For years, cracks in the ceramic has been a problem when surface mount power devices are directly mounted on PCBs that see large temperature ranges and power dissipations. Figure 1 through Figure 3 show some examples of fractures in power components mounted in finished circuit card assemblies.

This has become enough of a concern in the European high reliability community that the European Space Agency (ESA) issued a technical memo “ESA-TECQTM-MO-1143 Issue 1” [5], which discusses their concerns for many packages in the industry, not just the package style discussed herein.

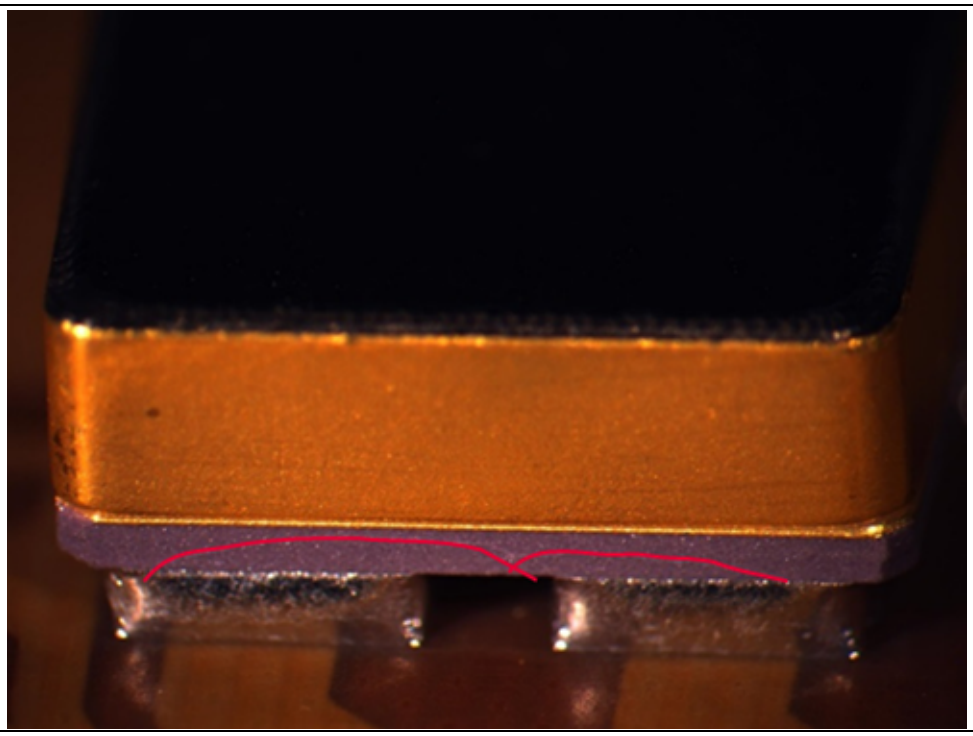

Figure 1 IR HiRel surface mount device on polyimide circuit board (cracks delineated in red)

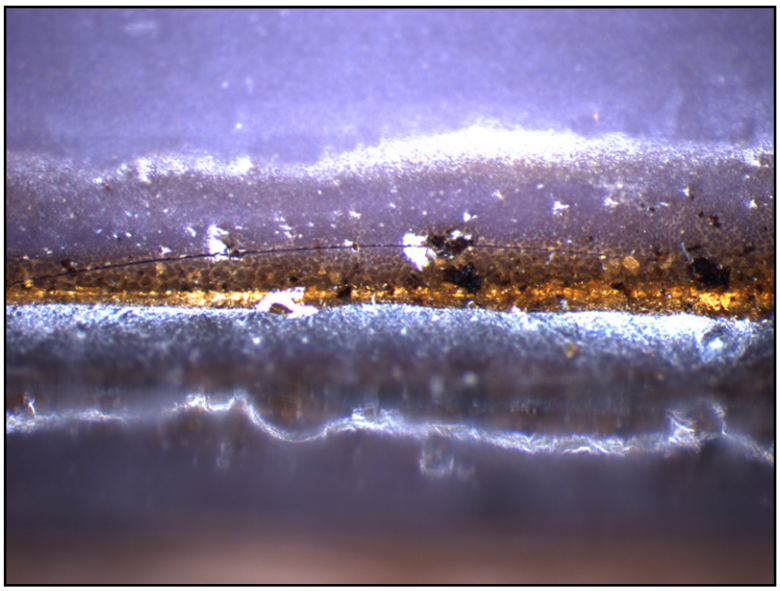

Figure 2 Stress fracture in a surface mount device on a circuit board

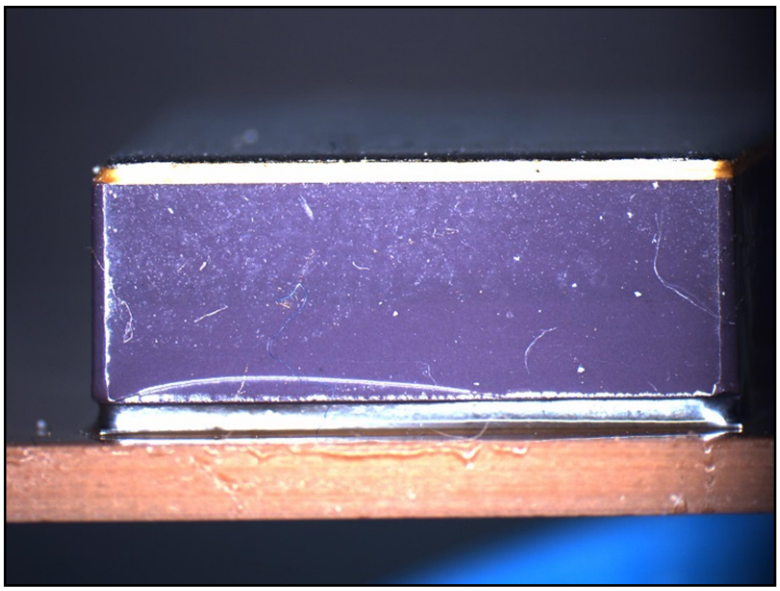

Figure 3 Stress fracture in surface mount device

IR HiRel has produced packaged power devices for decades and depending on the temperature extremes and number of thermal cycles expected those parts have seen use from the ocean's floor to beyond the orbit of Pluto. While the reliability of those packages is very high, these issues of thermal expansion can require some unique solutions for mounting larger devices, depending on the temperature extremes expected in each application. IR HiRel has effectively solved the problem for our larger SMD-2 packages with the introduction of the innovative SupIR-SMD package, as described in AN-1222 [6].

One of the smaller packages is the SMD-0.5, which is the most popular package sold (to date) for our IR HiRel rad hard power MOSFETs. While the problem may be less prevalent with the SMD-0.5, it is our intention to simplify and improve the solutions that exist with the SMD-0.5 by introducing the SMD-0.5e (enhanced).

3 Existing solutions for SMD-0.5

Different parties involved in packaging of high reliability power devices have tried to solve the problem of cracks in ceramic from different perspectives. For example, system integrators who use power devices have tried to modify the local properties of a PCB by inserting a low CTE material under the power device, and package suppliers, for their part, have tried to develop stronger ceramics. These efforts have had only limited success and have not been widely adopted by the industry.

For many years, IR HiRel has offered package lead or carrier options to its customers to overcome issues of CTE mismatch between the power device and its PCB for those applications where the thermal expansion was deemed risky. As described to some degree in AN-1016 [7], IR HiRel offers various lead options and carriers for larger surface mount devices to enable better assembly when the temperature range of the application's circuit board is large enough to cause concern.

In this section, we shall describe the SMD-0.5 packages for IR HiRel standard discrete devices. The outline drawing for the legacy SMD-0.5 [8] can be seen in Figure 4.

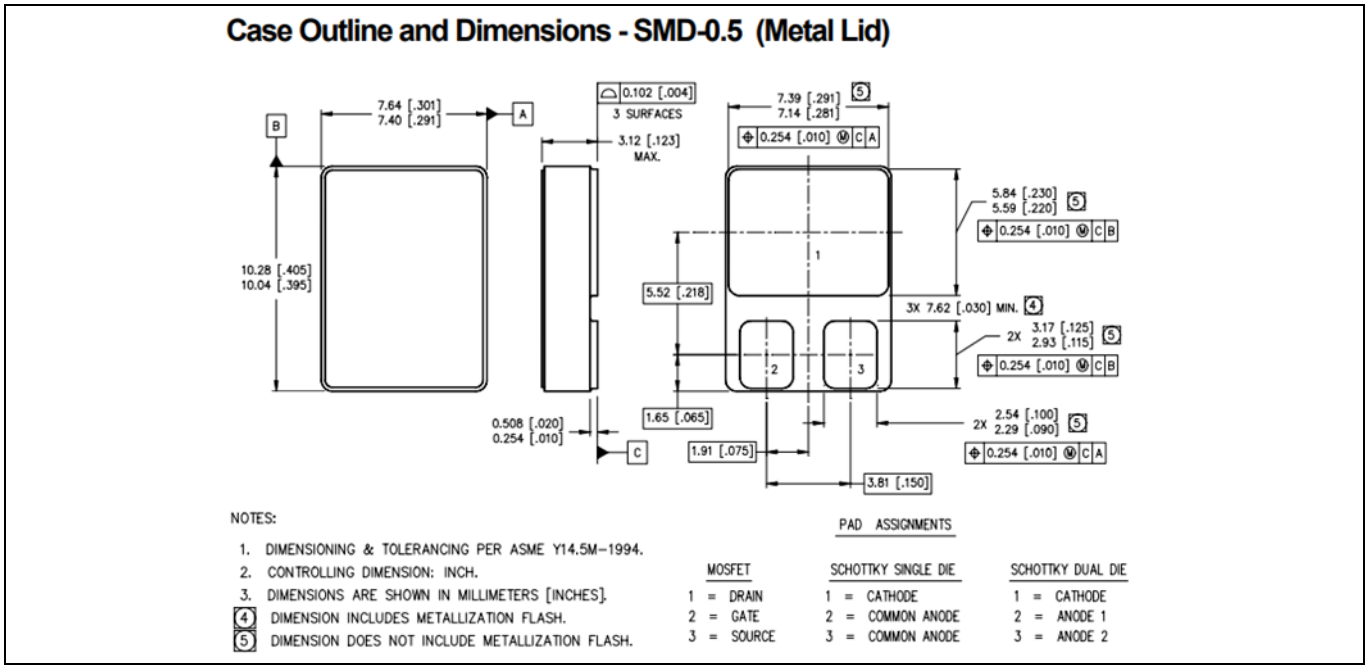

Figure 4 SMD-0.5 outline drawing (see IR HiRel website)

There are options for this package to provide stress relief in the forms of lead attachment of ribbons of copper to the SMD package. Figure 5 shows this concept with the dimensions of the lead attach option outlined [8] in Figure 7.

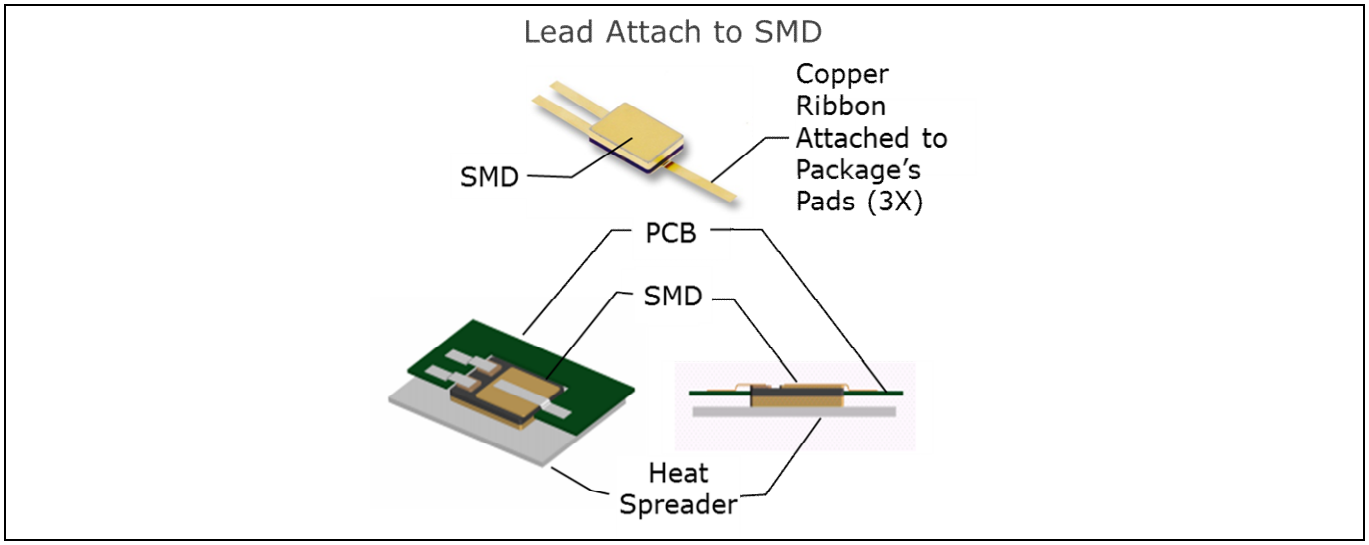

Figure 5 Lead attachment option for SMD to solve assembly thermal expansion concerns

Figure 6 shows an example of how a standard SMD part would be mounted on a board where the actual application temperature extremes would cause thermal expansion. This assembly is typical of a Space level, satellite board design for a power conversion system as delivered by IR HiRel.

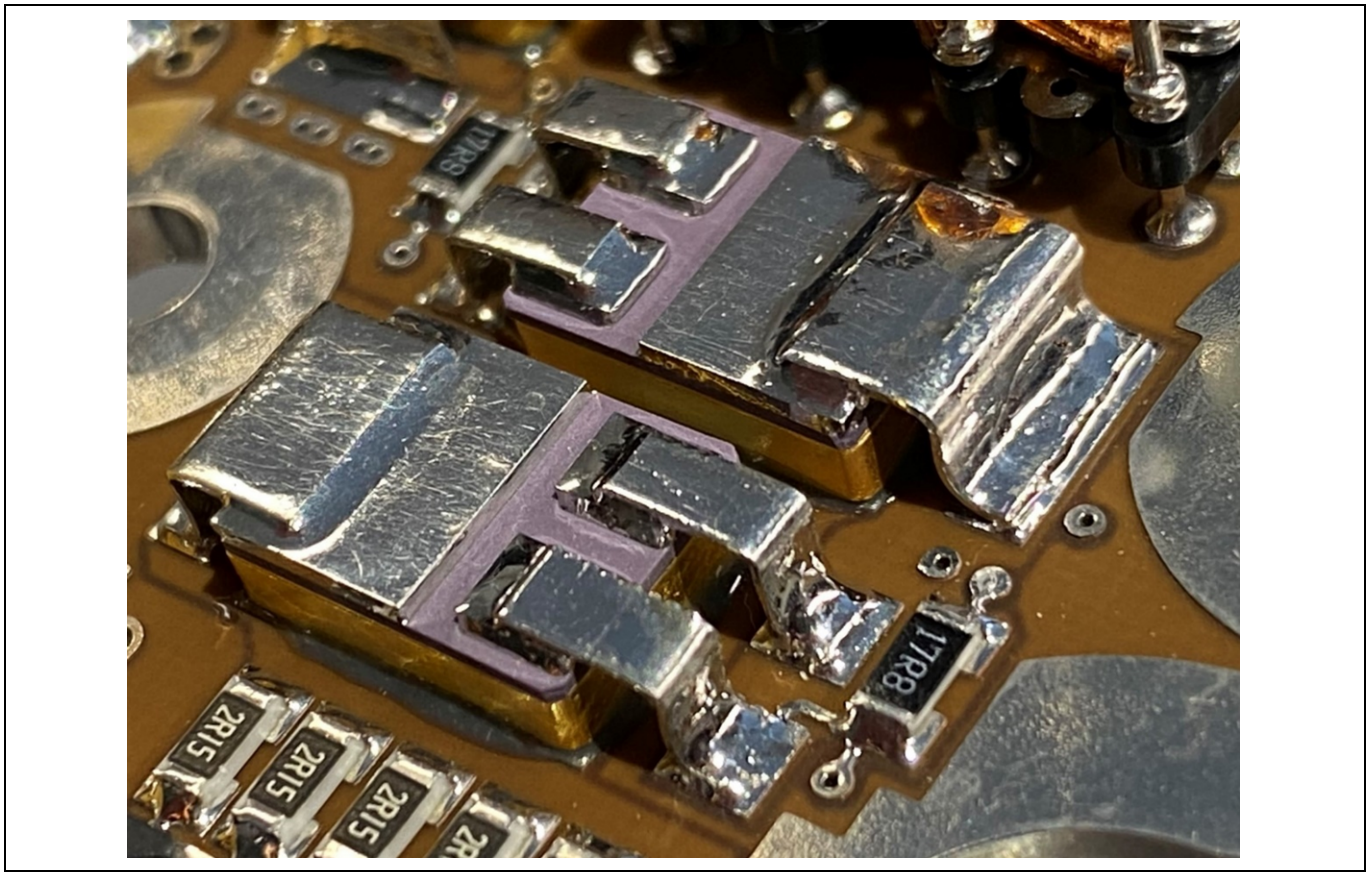

Figure 6 Example assembly with SMD-1 and ribbon leads

It is worth noting that this type of construction, while allowing for proper thermal expansion relief between the rad hard part and its circuit board, does not provide the optimal thermal path for heat removal from the device. The die is mounted on the terminals' side of the package and the heat must flow through the attached leads to the circuit board and/or through the sidewalls to the lid and down to the heat spreader. Also, the leads add parasitic resistance and inductance. Derating for Space grade components alleviates this problem, as the heat that results in a derated application can often be sufficiently conducted in this manner.

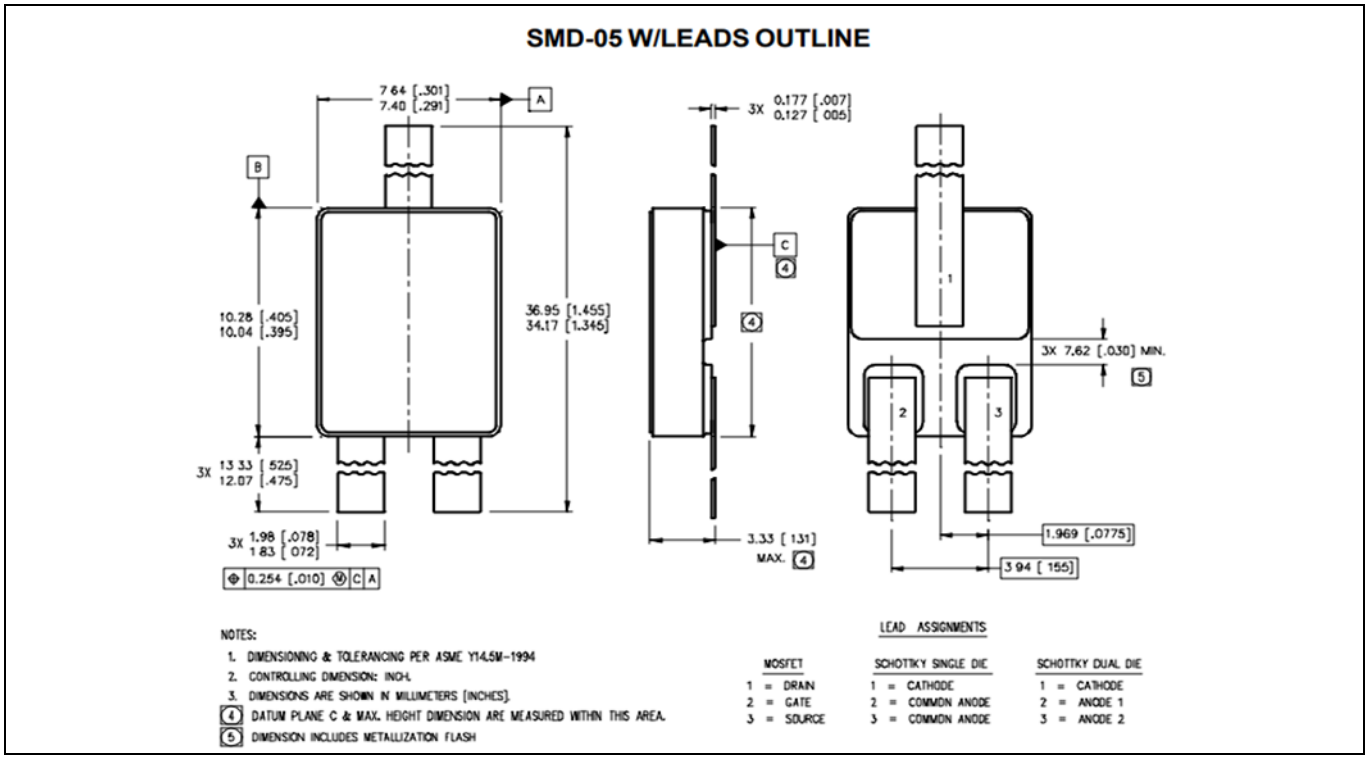

Figure 7 SMD-0.5 with leads, outline drawing (see IR HiRel website)

4 The SMD-0.5e: a better solution

Adding ribbon leads to the SMD packages solves the problem of thermal expansion mismatch, but the inherent problem lies at the terminal interface between the part and the circuit board solder pads. IR HiRel re-designed the package itself in order to achieve a better solution for thermal expansion and heat transfer.

In order to solve the stress cracking problem caused by any CTE mismatch between power package and circuit board, and to minimize the thermal and electrical resistance as well, IR HiRel invented a package design with a base to better match the CTE as shown in Figure 8. In this way, the CTE changes gradually from ceramic to PCB and thus reduces the stress from a large CTE mismatch all the way through the rad hard power discrete device. The idea was patented (US patent 9,887,143 [9]) by Infineon Technologies, IR HiRel's parent company. The new design concept and the dimensioned drawing [10] of the design are shown in Figure 9 and Figure 10, respectively. The SMD-0.5e fits in the same overall PCB footprint as the SMD-0.5, in order to provide drop-in compatibility.

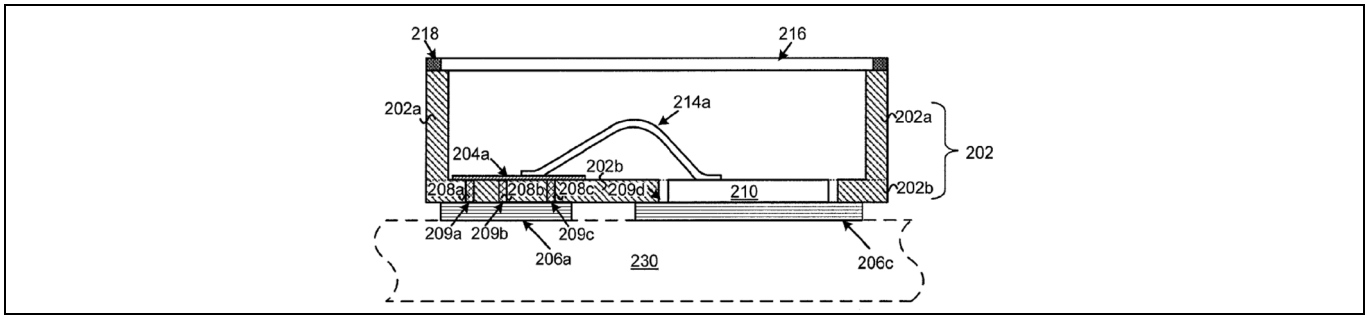

Figure 8 The SMD-0.5e, a new design concept (cutaway view showing chip and wirebond inside)

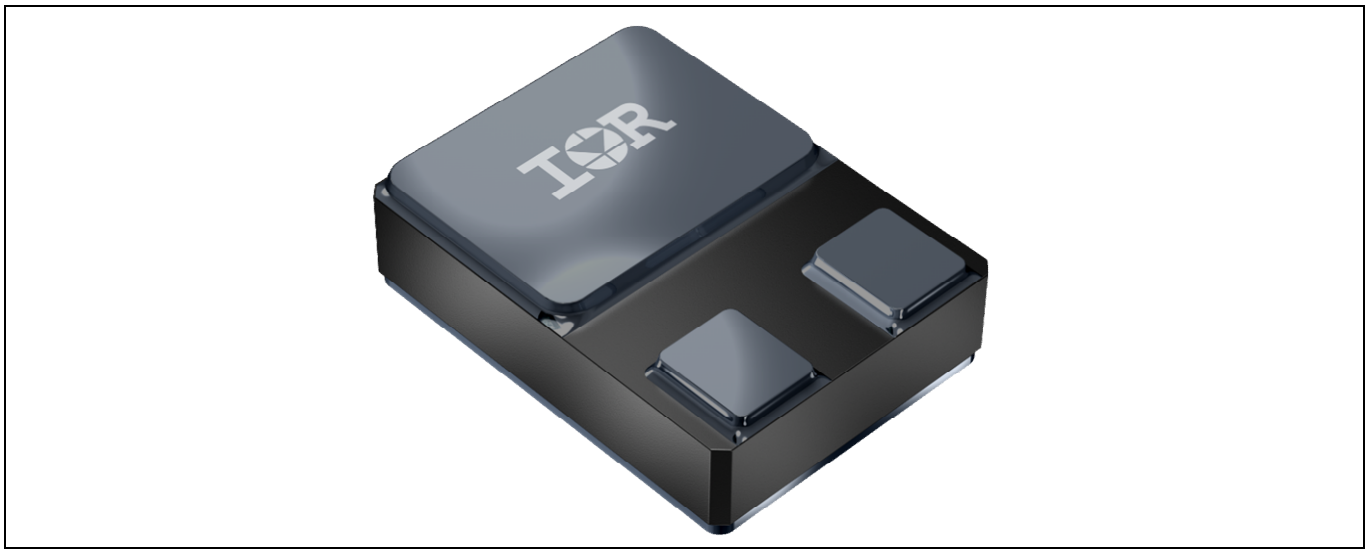

Figure 9 The SMD-0.5e package, post-solder dipped

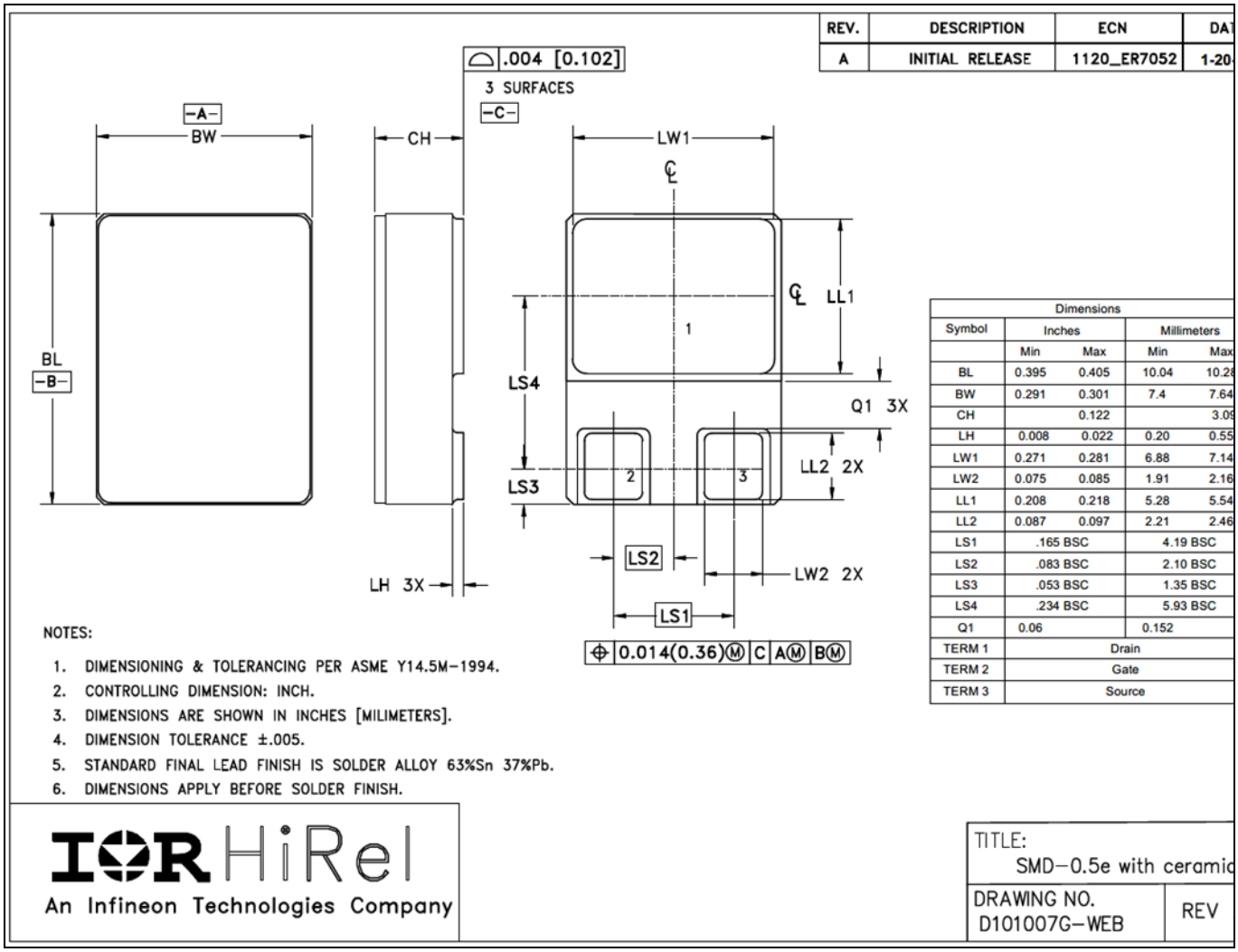

Dimensions				
Symbol	Inches		Millimeters	
	Min	Max	Min	Max
BL	0.395	0.405	10.04	10.28
BW	0.291	0.301	7.4	7.64
CH		0.122		3.09
LH	0.008	0.022	0.20	0.55
LW1	0.271	0.281	6.88	7.14
LW2	0.075	0.085	1.91	2.16
LL1	0.208	0.218	5.28	5.54
LL2	0.087	0.097	2.21	2.46
LS1	.165 BSC		4.19 BSC	
LS2	.083 BSC		2.10 BSC	
LS3	.053 BSC		1.35 BSC	
LS4	.234 BSC		5.93 BSC	
Q1	0.06		0.152	
TERM 1	Drain			
TERM 2	Gate			
TERM 3	Source			

Figure 10 SMD-0.5e, outline drawing (see IR HiRel website for current specification)

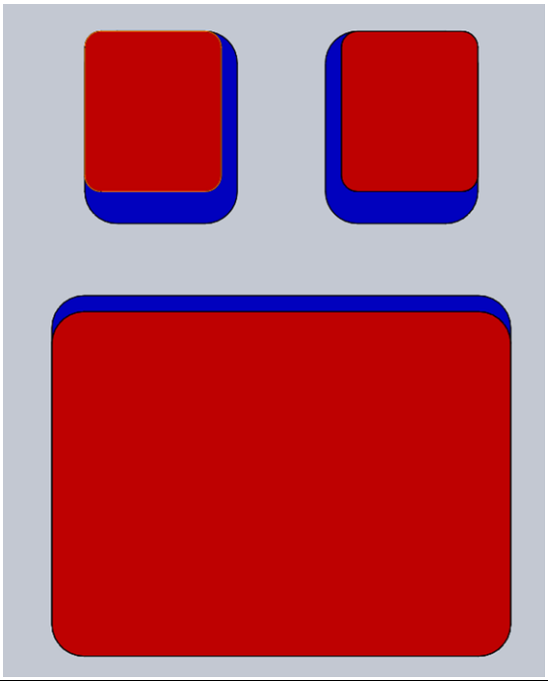

Figure 11 The increased separation between terminals side of SMD-0.5e (in red), showing relative movement from SMD-0.5 (in blue)

Figure 11 shows the general details of the new terminal sizes and separations. A detailed mechanical comparison of the differences can be performed by the reader based on the drawings available on the IR HiRel web site for the packages and their terminals. These new terminals for the SMD-0.5e maintain the same thermal impedance as the SMD-0.5, and will not affect the $R_{DS(on)}$ parameters in comparison of the SMD-0.5 to SMD-0.5e part datasheets. This package will hold devices which will be JANS qualified in accordance with MIL-PRF-19500, the quality and reliability level required (in general) for space applications. The increased separation between terminals allows for this package to be implemented in higher voltage applications.

Figure 12 shows an example of the SMD-0.5e implementation with the parts soldered to the test board in the more typical direct board mount method used for SMDs.

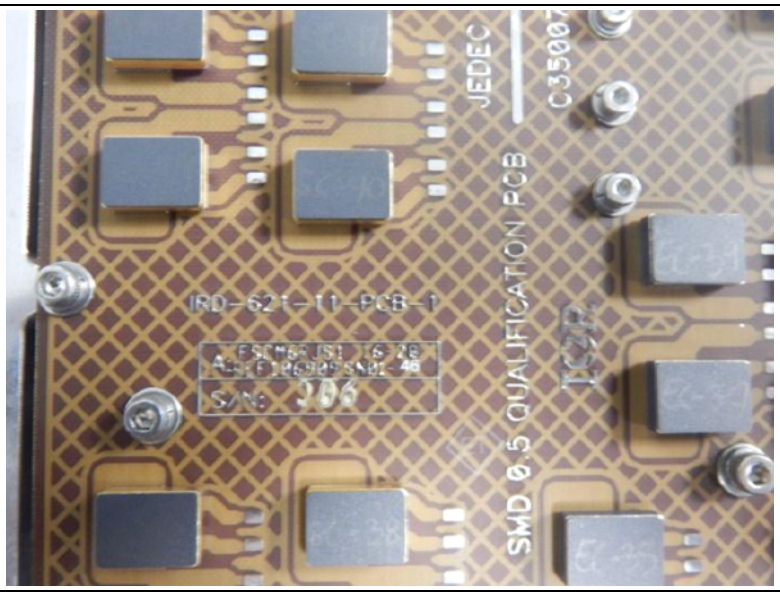

Figure 12 SMD-0.5e mounted on test board

Finite Element Analysis (FEA) was used to create and evaluate different designs and finalize the new design. The key figure of merit is the ceramic stress, which was calculated to be at a maximum level in the package of 150 MPa for the bottom and 200 MPa for the top when mounted on a PCB. This is much lower than the stress limit for flexural strength of the material at ~320 MPa. Stress levels in the FEA correlated very well with package performance in the board level test assemblies during the design iteration phase of the SMD-0.5e. Figure 13 shows an example of the FEA results.

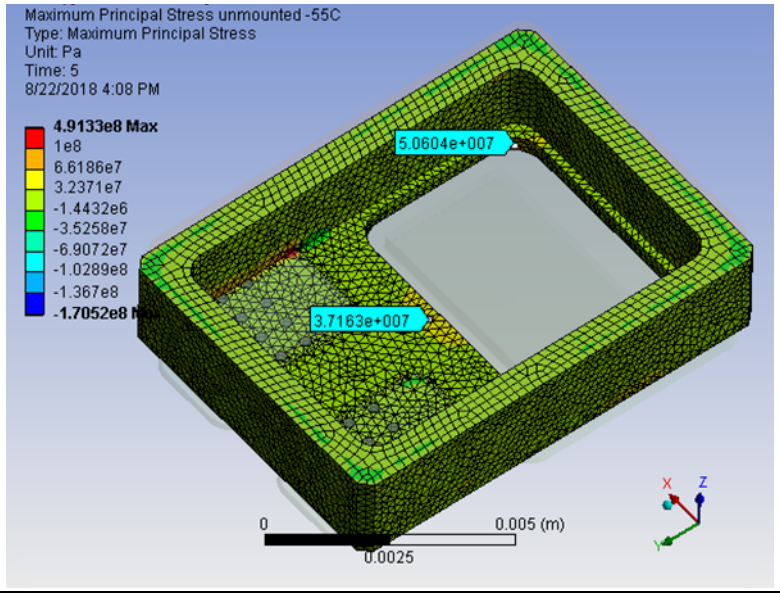

Figure 13 SMD-0.5e FEA model results, package only

Figure 13 results are for an unmounted package (meaning no PCB interface effects) at -55˚C, which was determined to be the worst case for stress. The analysis shows a maximum stress on the top of the part at 37 MPa, and on the bottom at 51 MPa, which are levels well within the required targets. Moving on to the next level of analysis, the package is further constrained by the effects of the PCB attachment. An FEA of that system level analysis is shown in Figure 14.

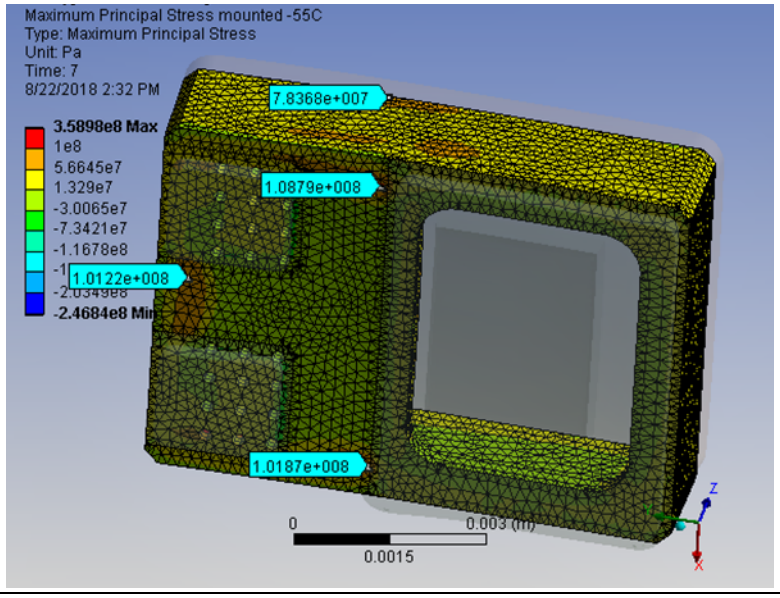

Figure 14 SMD-0.5e FEA results, package mounted on PCB

The analysis shows a maximum stress on the top of the part at 78 MPa, and on the bottom at 109 MPa. These levels are still well below maximum limits. The stress at 150°C is low and not shown here.

For reference, the current SMD-0.5 package was subjected to a similar analysis, which shows that the new package has achieved a relative decrease in the maximum stress by almost one half (396MPa vs 200MPa). That analysis is shown in Figure 15 and highlights that the maximum stress was found in the same area where cracks were observed in the actual SMD-0.5 packages that were subjected to conditions beyond their capability.

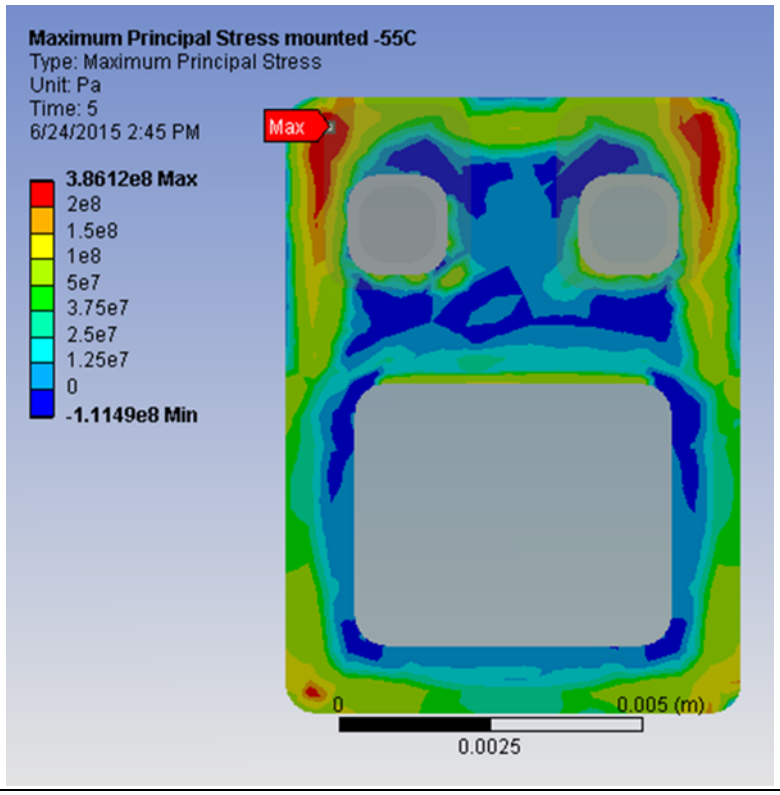

Figure 15 FEA of SMD-0.5 package, for comparision to new SMD-0.5e

5 Qualification testing

After decades of producing highly reliable rad hard power electronic devices for the Space industry, IR HiRel has achieved a very high standard for production of hermetic packages. Our approach is to follow the qualifications laid out in MIL-PRF-19500, with the result being a package capable of the JANS level DLA qualifications. The SMD-0.5e followed in its predecessor's footsteps by going through the Group A, B, C, and E Quality Conformance Inspections. The testing is too detailed to be listed here, but suffice to say it certainly included the stresses of mechanical vibration, shock, and thermal cycling. In fact, we took the new package to 1,000 thermal cycles without failure. However, as noted in the FEA, the mounting of the part to a board can induce additional factors that would affect the long-term reliability of the part, and so we continued to a higher level of power electronics assembly.

Our method for establishing tests beyond the typical package standards was to follow our own qualifications for board level DC-DC converter designs for spacecraft as used by our many customers. This method adheres to ESA ECSS-Q-ST-70-08, rev. C [11] but the random vibration test level has been increased from 30Grms (ESA guideline) to 40Grms. IR HiRel finds this level to be more in line with actual levels seen on typical equipment we have delivered. Furthermore, shock test has been included as ECSS-Q-ST-70-38C, rev. 1 [12] requires this test for shock sensitive devices.

To qualify the new package on a representative PCB, the SMD-0.5e was mounted on a printed circuit board. This board was then subjected to random vibration, mechanical shock and thermal cycling (in that order). IR HiRel has found this to be more consistent with the mission profile leading to final operation in orbit with regards to launch and the cyclical orbital temperature variations experienced during the life of a spacecraft.

The details of the test are as follows. The first step in the assembly-level qualification of the SMD-0.5e was to take the board assemblies and test them with respect to vibration as described in Table 2 and Table 3.

Table 2 Sinusoidal vibration levels

Range (Hz)	Level (peak to peak)	Sweep rate (octave/min)
25-30	13 G	1
30-100	20 G	
100-200	15 G	
Duration: 1 cycle up from 25 Hz to 200 Hz		

Table 3 Random vibration levels

Axis	Frequency range (Hz)	Level	G_{rms}	Duration (seconds)
X, Y, Z	20-100	+6 dB/octave	39.9	300
	100-1000	1 g^2/Hz		
	1000-1500	-3 dB/octave		
	1500-2000	-6 dB/octave		

The package was then tested for Mechanical Shock to 1500G/0.3ms, applied 3 times in positive and negative direction for all three axes. This is a half sine shock with peak acceleration 1500G and pulse width 0.3ms.

A picture of the fixture and setup for these tests is shown in Figure 16.

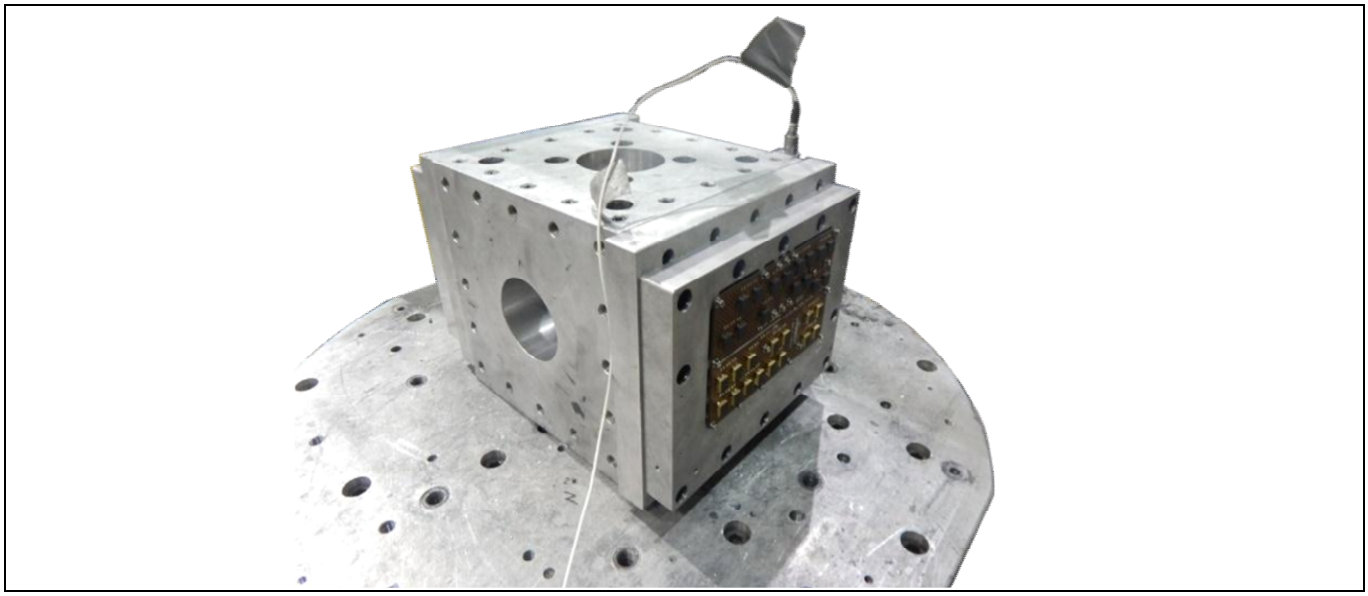

Figure 16 SMD-0.5e PCB test setup

After random vibration and mechanical shock, the board-level assemblies were subjected to thermal cycling. Temperature cycling was performed in according with MIL-STD-750F, Test Method 1051 [13], with some additional constraints in order to allow for the thermal mass of these larger parts to reach the temperature extremes. Our target was to reach 500 temp cycles from -55˚C to 100˚C with a 10˚C/minute ramp and a 15 minute dwell time as per our usual methods. External visual inspections were performed after every 100 thermal cycles as per MIL-STD-750F, Test Method 2071 [13]. However, when that test was 100% successful, we continued until 1,000 temperature cycles were completed. Still, no failures were observed. This method of temperature cycling is meant to allow for reliability calculations for the applicable in-orbit mission profile for various space missions.

6 Results of qualification

The end results of these sequential qualification tests are described in this section.

To verify the efficacy of the FEA analysis and package design, some parts were removed from the qualified PCB for fine and gross leak, and the others were for detailed examination of the solder joints and package integrity. The combination of the leak tests and the cross sections were to establish conclusive suitability of the SMD-0.5e to remain free of defects formed under these demanding thermal and mechanical conditions as specified by ECCS-Q-ST-70-38. First, fine and gross leak measurements were made in accordance with MIL-STD-750F, Test Method 1071 [13]. These measurements were taken on SMD-0.5e parts that had been removed from the board, and all of these parts passed the test, whose purpose is to verify the integrity of the package itself.

An example of one of those removed parts is shown in Figure 17 and Figure 18.

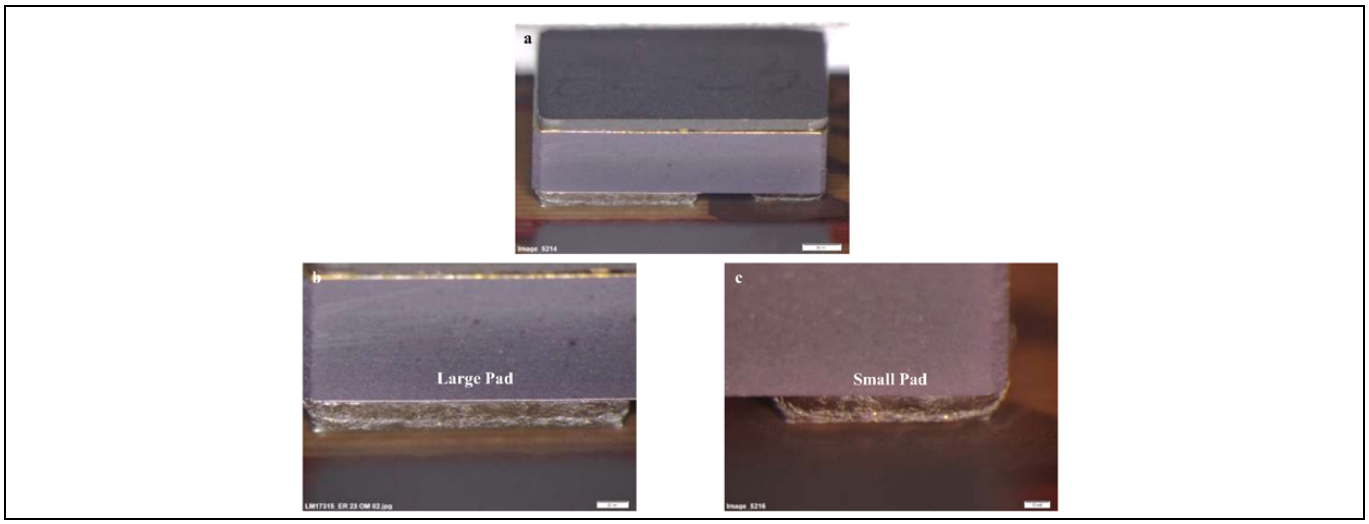

Figure 17 SMD-0.5e, side view, post-qualification external visual (no cracks)

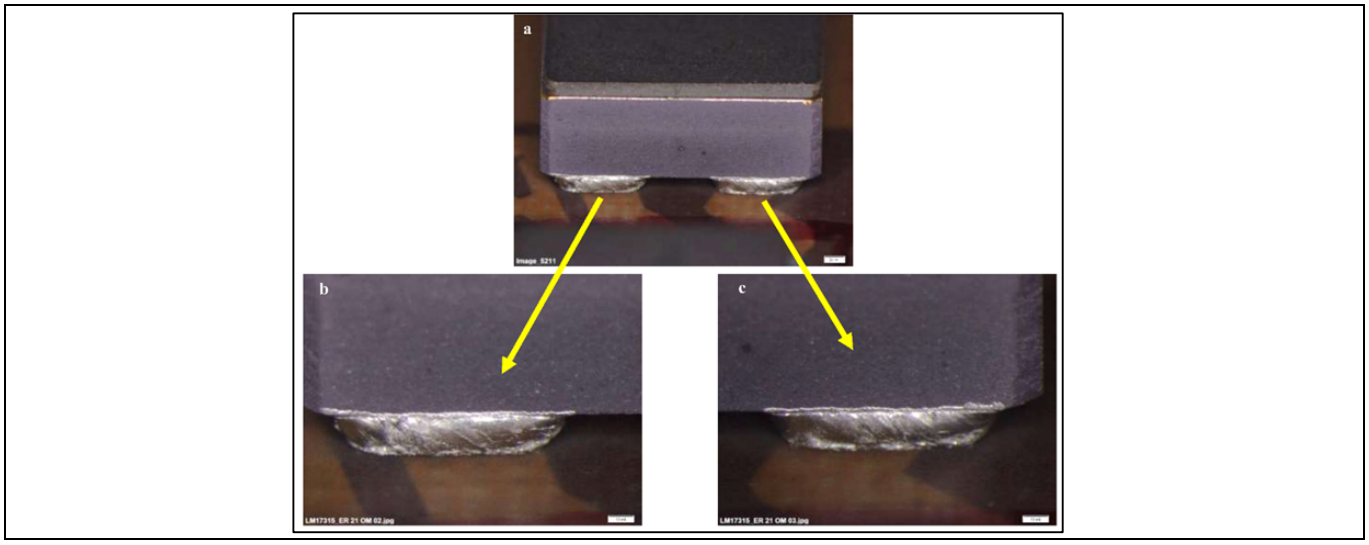

Figure 18 SMD-0.5e, end view, post-qualification external visual (no cracks)

7 Application

The application of the SMD-0.5e is fairly straightforward. It is to be assembled on a printed circuit board just as with any other surface mount device. It works well with most common PCB types in industry, for example, FR-4 and polyimide. The most common solder for surface mount of the package is lead-tin eutectic solder (Sn63Pb37). Suggested solder pads for PCB layout used are shown in Figure 20. These pad layouts worked well for us in the PCB-level qualifications, and customers are invited to use these as well. If there are special, customer-driven requirements for PCB assembly or other guidelines required for any given application, those should be considered in any layout with the SMD-0.5e.

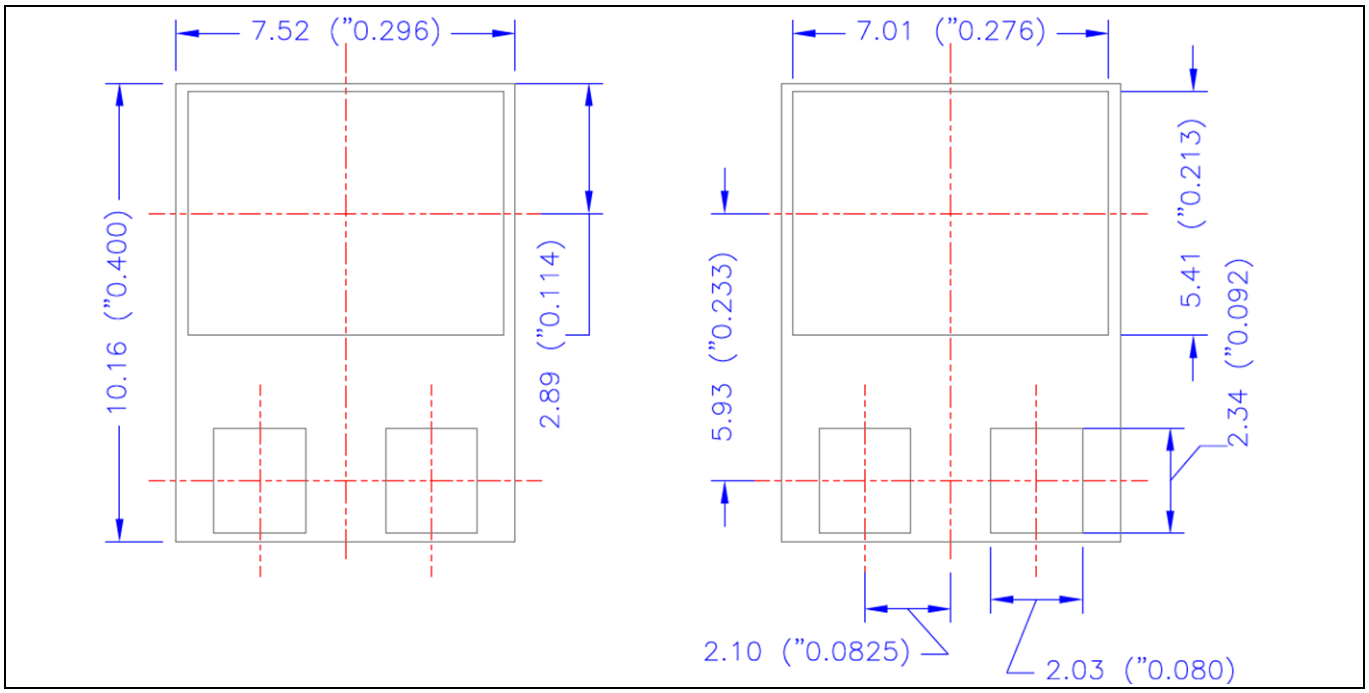

Figure 19 SMD-0.5e, nominal, suggested solder pads, dimensions in mm (inch)

The product nomenclature for SMD-0.5e power discrete devices includes the term “NKC” (please check IR HiRel’s web site for complete listing of product nomenclatures). The product nomenclature of QPL devices includes the term “U3CE” as suffix.

8 Conclusions

The extensive test results show that the new SMD-0.5e package has an excellent ability to withstand thermal expansion difference between package and printed circuit board, maintaining the hermetic integrity of the package as well as the solder joint from the part to a printed circuit board. In comparison to the prior art, this new package also allows for a significantly reduced footprint on the board, reduced weight, and a more direct thermal path for heat transfer. Specific details on each part as it is released in this package can be found in the parts' respective product datasheets on the Infineon web site for IR HiRel: www.infineon.com/irhirel.

9 References

[1] The Physics Hypertextbook, Thermal Expansion, published 1998-2017, Glenn Elert, Available https://physics.info/expansion/

[2] The Engineering Tool Box: Coefficients of Thermal Expansion, Available http://www.engineeringtoolbox.com/linear-expansion-coefficients-d_95.html

[3] FR4 PCB properties, Available http://pdf.eicom.ru/datasheets/injectorall_pdfs/fr-4_specs/fr-4_specs.pdf

[4] Chet Guiles, "Everything You Wanted To Know About Laminates", (Arlon Electronic Substrates: 2013), 10th Ed., Available https://imageserv11.team-logic.com/mediaLibrary/303/Arlon_LaminatesGuide_Full_3_1.pdf, p. 60.

[5] Carole Villette, ESA-TECQTM-MO-1143 issue 1, Subject: "Devices that have shown anomalies during assembly on laminates or during verification programme as per ECSS-Q-ST-70-38", www.escies.org

[6] Application Note 1222, Michael Thompson, IR HiRel (an Infineon Technologies Company), Available http://www.irf.com/technical-info/appnotes/an-1222.pdf

[7] Application Note 1016, Tiva Bussarakons, International Rectifier, Available http://www.irf.com/technical-info/appnotes/an-1016.pdf

[8] SMD-0.5 Outline Drawing, Available http://www.irf.com/package/hirel/smd05po.pdf

[9] Partington et al., US Patent Number 9,887,143, February 6th, 2018.

[10] SMD-0.5e Outline Drawing, http://www.irf.com/package/hirel/smd05epo.pdf

[11] ECSS-Q-ST-70-08C Manual soldering of high-reliability electrical connections, https://ecss.nl/standard/ecss-q-st-70-08c-manual-soldering-of-high-reliability-electrical-connections/

[12] ECCS-Q-ST-70-38 European Cooperation for Space Standardization, https://ecss.nl/standard/ecss-q-st-70-38c-rev-1-corrigendum1-high-reliability-soldering-for-surface-mount-and-mixed-technology-12-september-2018/

[13] MIL-STD-750F, Available http://everyspec.com/MIL-STD/MIL-STD-0700-0799/MIL-STD-750F_39654/

[14] MIL-STD-883J, Change Notice 5, Available http://everyspec.com/MIL-STD/MIL-STD-0800-0899/download.php?spec=MIL-STD-883J_CHG-5.052158.pdf

Revision history

Document version	Date of release	Description of changes
V 1.0	March 2022	Initial release
V 2.0	May 2022	Footer added

Trademarks
All referenced product or service names and trademarks are the property of their respective owners.

Edition 2022-05-04

Published by

International Rectifier HiRel Products, Inc.

An Infineon Technologies company

El Segundo, California 90245 USA

© 2022 Infineon Technologies AG.

All Rights Reserved.

Do you have a question about this document?
Email: erratum@infineon.com

Document reference

B119-I1297-V2-7600-NA-EC-P

Important notice

The information contained in this application note is given as a hint for the implementation of the product only and shall in no event be regarded as a description or warranty of a certain functionality, condition or quality of the product. Before implementation of the product, the recipient of this application note must verify any function and other technical information given herein in the real application. Infineon Technologies hereby disclaims any and all warranties and liabilities of any kind (including without limitation warranties of non-infringement of intellectual property rights of any third party) with respect to any and all information given in this application note.

The data contained in this document is exclusively intended for technically trained staff. It is the responsibility of customer's technical departments to evaluate the suitability of the product for the intended application and the completeness of the product information given in this document with respect to such application.

For further information on the product, technology, delivery terms and conditions and prices please contact your nearest Infineon Technologies office (**www.infineon.com**).

Warnings

Due to technical requirements components may contain dangerous substances. For information on the types in question please contact your nearest International Rectifier HiRel Products, Inc., an Infineon Technologies company, office.

International Rectifier HiRel Components may only be used in life-support devices or systems with the expressed written approval of International Rectifier HiRel Products, Inc., an Infineon Technologies company, if failure of such components can reasonably be expected to cause the failure of that life-support device or system, or to affect the safety and effectiveness of that device or system.

Infineon Technologies' products may not be used in any applications where a failure of the product or any consequences of the use thereof can reasonably be expected to result in personal injury.

Life support devices or systems are intended to be implanted in the human body, or to support and/or maintain and sustain and/or protect human life. If they fail, it is reasonable to assume that the health of the user or other persons may be endangered.