EiceDRIVER™ 1ED38x0Mc12M Enhanced

Reference manual

Single-channel 5.7 kV (rms) isolated gate driver IC with I2C configurability for DESAT, Soft-off, UVLO, Miller clamp and optional two-level turn-off

Features

- 650 V, 1200 V, 1700 V, 2300 V IGBTs, SiC, and Si MOSFETs
- 40 V absolute maximum output supply voltage
- ±3 A, ±6 A, and ±9 A typical sinking and sourcing peak output current
- Separate source and sink outputs for hard switching or optional two-level turn-off and with active Miller clamp
- I2C bus for parameter configuration and status register readout
- Precise, adjustable, and temperature compensated V_{CEsat} detection (DESAT) with fault output
- Adjustable IGBT soft turn-off after desaturation detection
- Operation at high ambient temperature up to 125 °C with over-temperature shut down at 160 °C (±10 °C)
- Tight IC-to-IC propagation delay matching ($t_{PDD,max}$ = 30 ns)
- Undervoltage lockout protection with hysteresis for input and output side with active shut-down
- Configurable feedback or fault-off behavior for comparator result of integrated ADC
- High common-mode transient immunity CMTI = 200 kV/µs
- Small space-saving DSO-16 fine-pitch package with large creepage distance (>8 mm)
- Safety certification
  - UL 1577 recognized (File E311313) with $V_{ISO,test}$ = 6840 V (rms) for 1 s, V_{ISO} = 5700 V (rms) for 60 s
  - IEC 60747-17 approval (Certificate no. 40055743 with V_{IORM} = 1767 V (peak, reinforced)
- Refer to the product details for electrical parameters and certification details
- Evaluation board available EVAL-1ED3890MX12M

Potential applications

- Industrial motor drives - compact, standard, premium, servo drives
- Solar inverters
- UPS systems
- Welding
- Commercial and agricultural vehicles (CAV)
- Commercial air-conditioning (CAC)
- High-voltage isolated DC-DC converters
- Isolated switch mode power supplies (SMPS)



PG-DSO-16

Product validation

Qualified for industrial applications according to the relevant tests of JEDEC47/20/22.

Device information

Product type	Output current	Isolation class	Marking	OPN
1ED3830MC12M	3 A (typ)	reinforced	3830MC12	1ED3830MC12MXUMA1
1ED3860MC12M	6 A (typ)	reinforced	3860MC12	1ED3860MC12MXUMA1
1ED3890MC12M	9 A (typ)	reinforced	3890MC12	1ED3890MC12MXUMA1
1ED3830MU12M	3 A (typ)	UL 1577	3830MU12	1ED3830MU12MXUMA1
1ED3860MU12M	6 A (typ)	UL 1577	3860MU12	1ED3860MU12MXUMA1
1ED3890MU12M	9 A (typ)	UL 1577	3890MU12	1ED3890MU12MXUMA1

Description

The 1ED38x0Mc12M family (X3 Digital) consists of galvanically isolated single channel gate driver ICs in a small PG-DSO-16 package with a large creepage and clearance of 8 mm. The gate driver ICs provide a typical peak output current of 3 A, 6 A, and 9 A.

Adjustable control and protection functions are included to simplify the design of highly reliable systems. These parameters are adjustable from the input side via the I2C interface (pin *SDA* and *SCL*).

All logic I/O pins are supply voltage dependent 3.3 V or 5 V CMOS compatible and can be directly connected to a microcontroller.

The data transfer across the galvanic isolation is realized by the integrated coreless transformer technology.

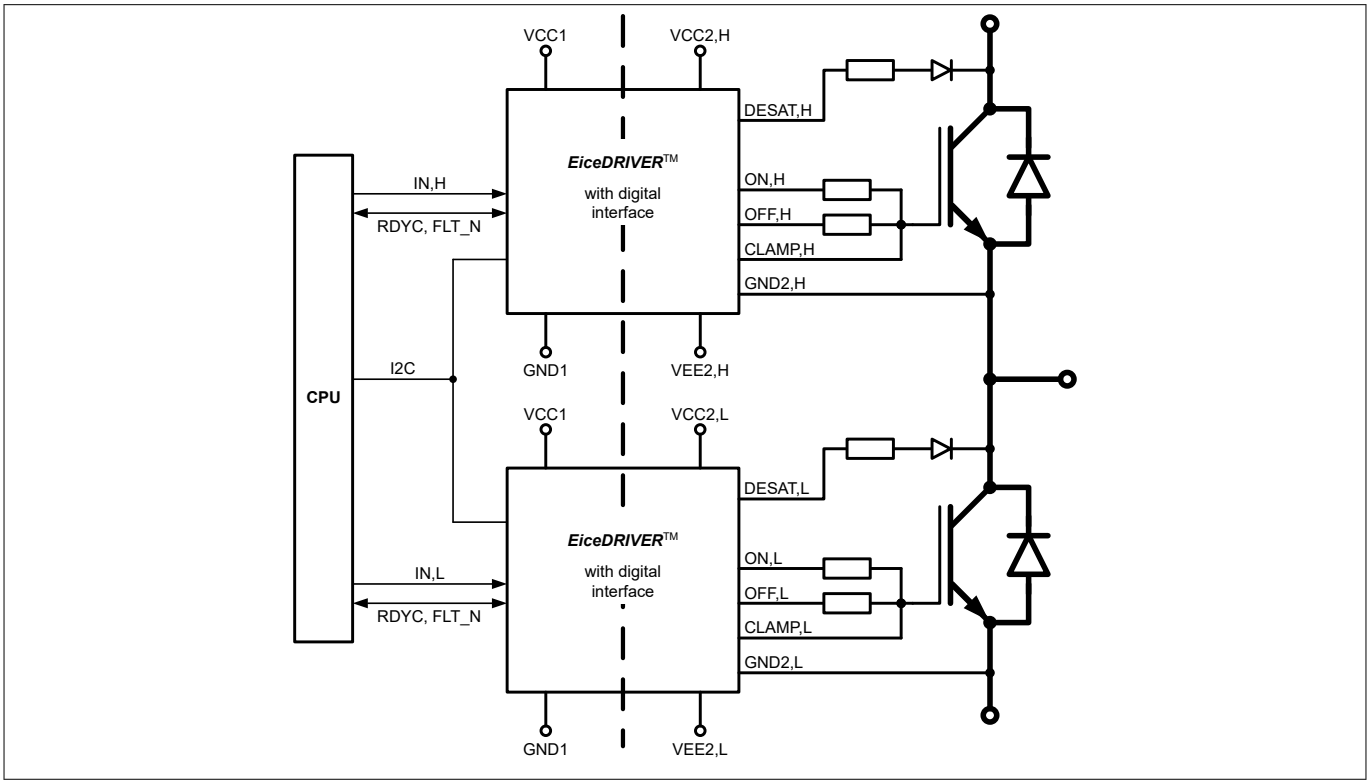

Figure 1 Typical application

Table of contents

Table of contents . . . 3
1 Block diagram . . . 6
2 Related products . . . 7
3 Functional description . . . 8
3.1 Start-up and fault clearing . . . 8
3.2 Supply . . . 9
3.2.1 Input side undervoltage lockout, *VCC1* UVLO . . . 10
3.2.2 Output side under-voltage lockout, *VCC2* UVLO . . . 11
3.2.3 Output side undervoltage lockout, *VEE2* UVLO . . . 12
3.3 Input side logic . . . 13
3.3.1 IN non-inverting driver input . . . 13
3.3.2 *RDYC* ready status output, fault-off and fault clear input . . . 13
3.3.2.1 Ready sources and configuration of not ready events . . . 13
3.3.2.2 *RDYC* fault-off input . . . 14
3.3.2.3 *RDYC* fault clear input . . . 15
3.3.3 *FLT_N* status output and fault-off input . . . 15
3.3.3.1 Fault sources and configuration of fault events . . . 16
3.3.3.2 *FLT_N* fault-off input . . . 16
3.3.4 I2C bus . . . 17
3.3.4.1 I2C bus byte format . . . 17
3.3.4.2 I2C bus read/write operation . . . 18
3.3.4.3 I2C bus address . . . 19
3.4 Operating states . . . 21
3.4.1 OFF state . . . 21
3.4.2 Address configuration state . . . 22
3.4.3 Parameter configuration state . . . 22
3.4.4 Parameter transfer state . . . 22
3.4.5 Normal operation state . . . 22
3.4.6 Not ready state . . . 23
3.4.7 Fault state . . . 23
3.4.8 Soft-reset, restore and recovery . . . 24
3.4.8.1 Soft-reset . . . 25
3.4.8.2 Automatic configuration restore from input side . . . 25
3.4.8.3 Automatic configuration recovery from output side . . . 25
3.5 Measurement . . . 26
3.6 Monitoring . . . 26
3.7 Desaturation protection . . . 28
3.7.1 DESAT behavior . . . 28
3.7.2 DESAT adjustment . . . 29

Table of contents

3.7.2.1 DESAT1 adjustment . . . 29
3.7.2.2 DESAT2 adjustment . . . 29
3.8 Gate driver output . . . 31
3.8.1 Turn-on behavior . . . 32
3.8.2 Turn-off and fault turn-off behavior . . . 32
3.8.2.1 Hard switching turn-off . . . 33
3.8.2.2 Two-level turn-off . . . 33
3.8.2.2.1 Two-level turn-off behavior at normal operating conditions . . . 34
3.8.2.2.2 Two-level turn-off behavior at overload condition . . . 35
3.8.2.2.3 Two-level turn-off short pulse behavior . . . 36
3.8.2.2.4 Two-level turn-off short pulse behavior with slow turn-on ramp speed . . . 36
3.8.2.3 Soft turn-off . . . 37
3.8.2.4 Switch-off timeout until forced switch-off . . . 37
3.8.3 Active shut-down . . . 38
3.8.4 Active Miller clamp . . . 38
3.8.4.1 CLAMP output types . . . 38
3.9 Short circuit clamping . . . 40

4 Register description . . . 41
4.1 Configuration registers . . . 43
4.1.1 I2CADD: I2C address of gate driver . . . 43
4.1.2 I2CGADD: I2C group address of gate driver . . . 43
4.1.3 I2CCFGOK: I2C address configuration access . . . 43
4.1.4 PSUPR: Input pin filter times for *IN*, *RDYC*, *FLT_N*, and I2C . . . 44
4.1.5 FCLR: *FLT_N* clear behavior by RDYC or timer . . . 45
4.1.6 RECOVER: Input and output configuration recovery modes . . . 46
4.1.7 UVTLVL: UVLO threshold level for *VCC2* and *VEE2* . . . 47
4.1.8 UVSVCC2C: *VCC2* soft UVLO enable and threshold level . . . 48
4.1.9 UVSVEE2C: *VEE2* soft UVLO enable and threshold level . . . 49
4.1.10 ADCCFG: ADC enable and compare polarity . . . 50
4.1.11 VEXTCFG: *CLAMP* pin voltage compare limit . . . 51
4.1.12 OTWCFG: Over-temperature warning level and action . . . 52
4.1.13 D1LVL: DESAT disable and DESAT1 voltage threshold level . . . 53
4.1.14 D1FILT: DESAT1 filter time and type . . . 53
4.1.15 D2LVL: DESAT2 enable during TLTOff, influence on fault off, and voltage threshold level . . . 55
4.1.16 D2FILT: DESAT2 filter time and type . . . 56
4.1.17 D2CNTLIM: DESAT2 event counter limit . . . 57
4.1.18 D2CNTDEC: DESAT2 event count down . . . 58
4.1.19 DLEBT: DESAT leading edge blanking time . . . 59
4.1.20 F2ODLY: Delay from fault event to gate driver off . . . 60
4.1.21 DTECOR: DESAT temperature compensation . . . 60
4.1.22 DRVFOFF: Type of fault switch-off . . . 62
4.1.23 DRVCFG: Type of normal switch-off and TLTOff gate charge range . . . 63

Table of contents

4.1.24 TLTOC1: TLTOff level and ramp A . . . 64
4.1.25 TLTOC2: TLTOff duration and ramp B . . . 65
4.1.26 CSSOFCFG: Soft turn-off current . . . 65
4.1.27 CLCFG: *CLAMP* and pin monitoring filter time and type, *CLAMP* output types and disable . . . 66
4.1.28 SOTOUT: Switch-off timeout time and fault signaling . . . 67
4.1.29 CFGOK: Register configuration lock . . . 68
4.1.30 CLEARREG: Clear event counter registers for DESAT2, *VCC1* UVLO, *VCC2* UVLO, event flags, and soft-reset . . . 69
4.2 Status registers . . . 71
4.2.1 Sticky bits . . . 71
4.2.2 RDYSTAT: Status of input side, output side, and gate driver IC . . . 71
4.2.3 SECUVEVT: Output side UVLO events causing a not ready state (sticky bits) . . . 72
4.2.4 GFLTEVT: Indicator of active fault handling . . . 73
4.2.5 FLTEVT: Fault status and events of input side and output side . . . 74
4.2.6 PINSTAT: Status of pins . . . 76
4.2.7 COMERRST: Status of input to output communication . . . 77
4.2.8 CHIPSTAT: Logic status of gate driver . . . 78
4.2.9 EVTSTICK: Event indicator (sticky bits) . . . 78
4.2.10 UV1FCNT: Counter of unfiltered *VCC1* UVLO events . . . 80
4.2.11 UV2FCNT: Counter of unfiltered *VCC2* UVLO events . . . 80
4.2.12 D2ECNT: Counter of DESAT2 events . . . 80
4.2.13 ADCMVDIF: Filtered ADC calculation result of *VCC2* to *GND2* . . . 81
4.2.14 ADCMGND2: Filtered ADC result of *GND2* to *VEE2* . . . 81
4.2.15 ADCMVCC2: Filtered ADC result of *VCC2* to *VEE2* . . . 82
4.2.16 ADCMTEMP: Filtered ADC result of gate driver temperature . . . 82
4.2.17 ADCMVEXT: Filtered ADC result of *CLAMP* to *VEE2* . . . 83

5 Application notes . . . 85
5.1 Reference layout for thermal data . . . 85
5.2 Printed circuit board guidelines . . . 85

Revision history . . . 85

Disclaimer . . . 86

1 Block diagram

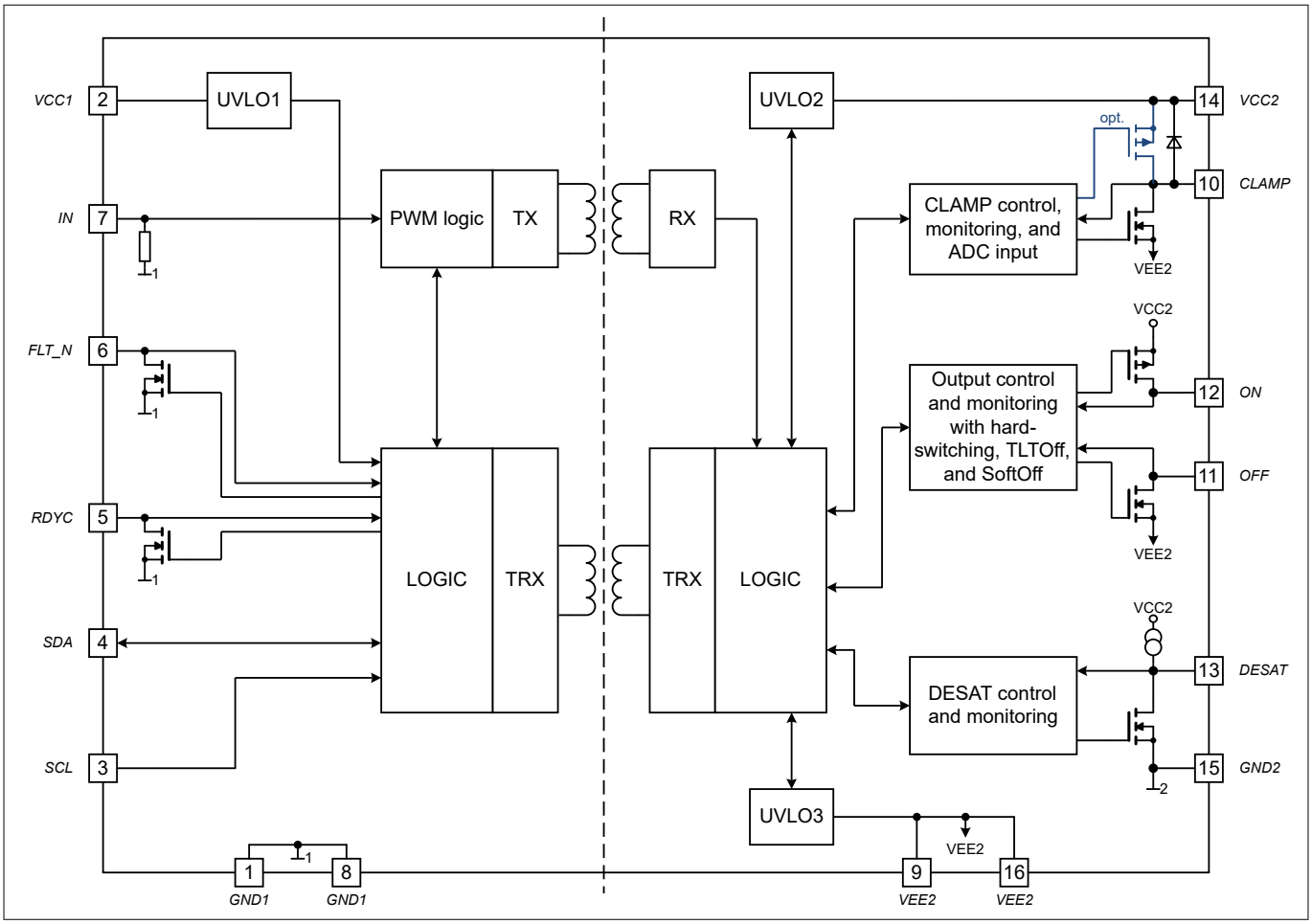

Figure 2 Block diagram

2 Related products

***Note**: Please consider the gate driver IC power dissipation and insulation requirements for the selected power switch and operating condition.*

Product group	Product name	Description
TRENCHSTOP™ IGBT Discrete	IKWH40N67PR7	670 V, 40 A IGBT with anti-parallel diode in TO-247-3-HCC
	IHW30N160R5	1600 V, 30 A IGBT Discrete with anti-parallel diode in TO-247
	IKW15N120CS7	1200 V IGBT7 S7, 15 A IGBT with anti-parallel diode in TO247
	IKQ75N120CS7	1200 V IGBT7 S7, 75 A IGBT with anti-parallel diode in TO247PLUS-3
CoolSiC™ SiC MOSFET Discrete	IMBF170R1K0M1	1700 V, 1000 mΩ SiC MOSFET in TO-263-7 with extended creepage
	IMZC120R040M2H	1200 V, 40 mΩ SiC MOSFET G2 in TO247-4 package with high creepage
	IMZA120R012M2H	1200 V, 12 mΩ SiC MOSFET G2 in TO247-4 package
	IMBG120R026M2H	1200 V, 26 mΩ SiC MOSFET G2 in TO-263-7 package
	IMYH200R012M1H	2000 V, 12 mΩ SiC MOSFET in TO-247-PLUS with high creepage and clearance
CoolSiC™ SiC MOSFET Module	FS33MR12W1M1H_B11	EasyPACK™ 1B 1200 V, 33 mΩ sixpack module
	FF17MR12W1M1H_B11	EasyDUAL™ 1B 1200 V, 17 mΩ half-bridge module
	FF4MR12W2M1H_B11	EasyDUAL™ 2B 1200 V, 4 mΩ half-bridge module
	F4-17MR12W1M1H_B76	EasyPACK™ 1B 1200 V, 17 mΩ fourpack module
TRENCHSTOP™ IGBT Modules	F4-100R17N3E4	EconoPACK™ 3 1700 V, 100 A fourpack IGBT module
	F4-200R17N3E4	EconoPACK™ 3 1700 V, 200 A fourpack IGBT module
	FP10R12W1T7_B11	EasyPIM™ 1B 1200 V, 10 A three phase input rectifier PIM IGBT module
	FS100R12W2T7_B11	EasyPACK™ 2B 1200 V, 100 A sixpack IGBT module
	FP150R12KT4_B11	EconoPIM™ 3 1200V three-phase PIM IGBT module
	FS200R12KT4R_B11	EconoPACK™ 3 1200 V, 200 A sixpack IGBT module

3 Functional description

The 1ED38x0Mc12M family (X3 Digital) consists of galvanically isolated single channel gate driver ICs with an extensive digital adjustable feature parameter set. All adjustments are done from low voltage input side during start up via I2C bus. The configuration is stored into registers.

To start-up the gate driver IC for normal operation both input and output sides of the gate driver IC need to be powered.

The 1ED38x0Mc12M family (X3 Digital) is designed to support various supply configurations on the input and output side. On the output side unipolar and bipolar supply is possible.

The output stage is realized as rail-to-rail. There the gate driver voltage follows the supply voltage without an additional voltage drop. In addition it provides an easy clamping of the gate voltage during short circuit of an external IGBT.

The *RDYC* status output reports correct operation of the gate driver IC like sufficient voltage supply. The *FLT_N* status output reports failures in the application like desaturation detection.

To ensure safe operation the gate driver IC is equipped with an input and output side under-voltage lockout circuit. The UVLO levels are optimized for IGBTs and MOSFETs, and are adjustable.

The desaturation detection circuit protects the external IGBT from destruction at a short circuit. The gate driver IC reacts on a DESAT fault by turning off the IGBT with one of the following configurable turn-off methods:

- two-level turn-off
- adjustable soft-off
- hard switch-off

The two-level turn-off (TLTOff) is a voltage controlled turn-off function.

The soft turn-off function is used to switch-off the external IGBT in overcurrent conditions in a soft-controlled manner to protect the IGBT against collector emitter over-voltages.

An adjustable active Miller clamp function protects the IGBT from parasitic turn-on in fast switching applications.

The 1ED38x0 family also offers several measurement and monitoring functions. The monitoring functions can be divided into:

- hardware based functions and
- ADC measurement based functions.

3.1 Start-up and fault clearing

For normal operation both input and output sides of the gate driver IC need to be powered. A low level at the *FLT_N* pin always indicates a fault condition. In this case the IC starts internal mechanisms for fault clearing.

Input side start-up

1. Voltage at *VCC1* reaches the input UVLO threshold: input side of gate driver IC starts operating
2. *FLT_N* follows input supply voltage
3. Input side is ready to communicate across I2C bus, awaiting user gate driver parameter configuration
4. Records parameters received across the I2C bus
5. Waits until output side is powered
6. Initiates internal start-up: Transfers configured values to output side
7. Performs internal self-test

The complete start-up time t_{START1} depends on the duration of the user parameter configuration.

Output side start-up

1. Voltage at *VCC2* reaches the output UVLO threshold: output side of gate driver IC starts operating
2. Activates OFF gate driver output: connected gate stays discharged
3. Waits until input side is powered

4. Initiates internal start-up: Receives configured values from input side
5. Performs internal self-test

The complete start-up time t_{START2} depends on the duration of the user parameter configuration.

The gate driver IC releases *RDYC* to high to signal a successful start-up and its readiness to operate. The gate driver IC will follow the status of the *IN* signal.

Clearing a fault with *RDYC* to low cycle

1. Set *IN* to low
2. Set *RDYC* to low for a duration longer than the fault clear time t_{CLRMIN}
3. Release *RDYC* to high
   a. If the source of the fault is no longer present, *FLT_N* is released to high
   b. If another fault source is active, *FLT_N* stays low and the cycle needs to be repeated
4. Continue PWM operation

Clearing a fault by self clear timer

1. Set *IN* to low
2. Self clear timer starts counting
3. Self clear timer reaches self clear time
   a. If the source of the fault is no longer present, *FLT_N* is released to high
   b. If another fault source is active, *FLT_N* stays low and the timer restarts
4. Continue PWM operation

3.2 Supply

The 1ED38x0Mc12M family (X3 Digital) is designed to support various supply configurations. The input side can be used with a 3.3 V or 5 V supply.

The output side requires either an unipolar supply (*VEE2* = *GND2*) or a bipolar supply.

- Individual supply voltages between *VCC2* and *GND2* or *GND2* and *VEE2* shall not exceed 25 V.
- The total supply voltage between *VCC2* and *VEE2* shall not exceed 35 V.

To ensure safe operation of the gate driver IC, it is equipped with an input and output side undervoltage lockout circuit.

Unipolar supply

In unipolar supply configuration the gate driver IC is typically supplied with a positive voltage of 15 V at *VCC2*. *GND2* and *VEE2* are connected together and this common potential is connected to the IGBT emitter.

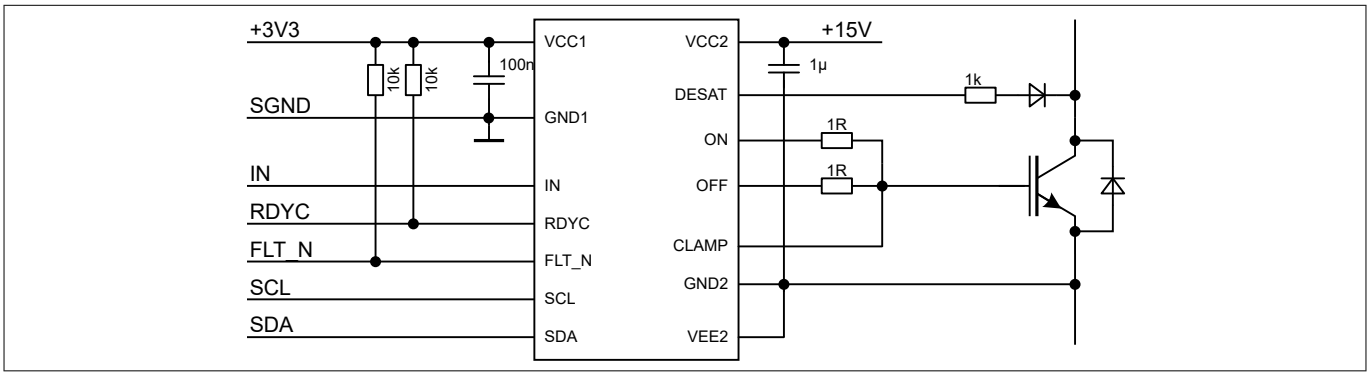

Figure 3 Application example with unipolar supply

Bipolar supply

For bipolar supply the gate driver IC is typically supplied with a positive voltage of 15 V at *VCC2* and a negative voltage of -8 V or -15 V at *VEE2* relative to *GND2*.

Between *VCC2* and *VEE2* the maximum potential difference is 35 V.

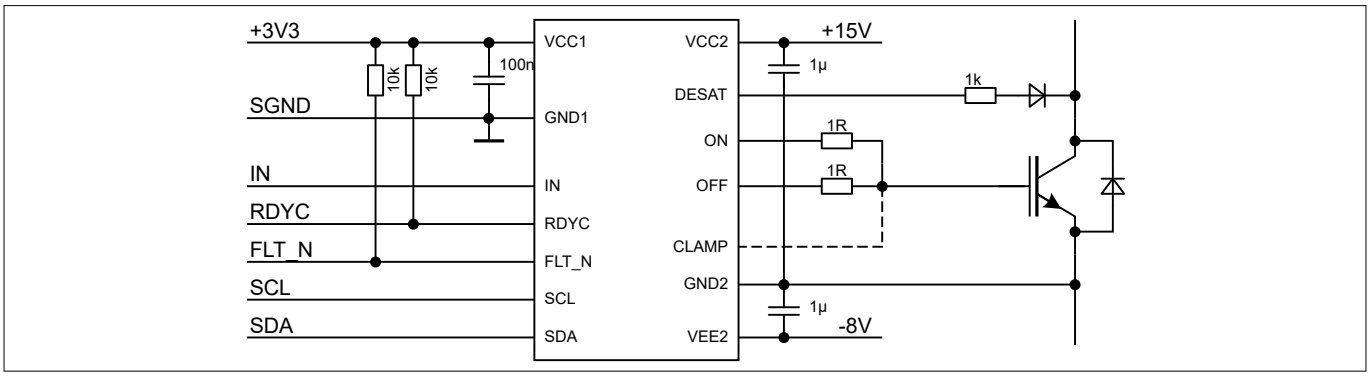

Figure 4 Application example with bipolar supply

Negative supply prevents a parasitic turn-on due to the additional voltage margin to the gate turn-on threshold.

VEE2 over GND2 supply connection check

The gate driver IC has a built-in connection check for *VEE2*. A loss of *VEE2* connection will be detected and signaled via *RDYC*.

3.2.1 Input side undervoltage lockout, *VCC1* UVLO

To ensure correct operation of the input side and safe operation of the application the gate driver IC is equipped with an input supply undervoltage lockout for *VCC1*.

UVLO behavior during start-up:

1. The voltage at the supply terminal *VCC1* reaches the V_{UVLO1H} threshold
2. The gate driver IC waits on the address and parameter configuration and synchronizes it with the output side
3. The IC releases the *RDYC* output to **high** and is ready to operate.

The complete start-up time t_{START1} depends on the duration of the user parameter configuration.

UVLO behavior during shut-down:

- If the supply voltage V_{VCC1} of the input side drops below V_{UVLO1L} the *RDYC* signal is switched to **low** and the output will be switched off.

The fault signal *FLT_N* follows the input supply voltage.

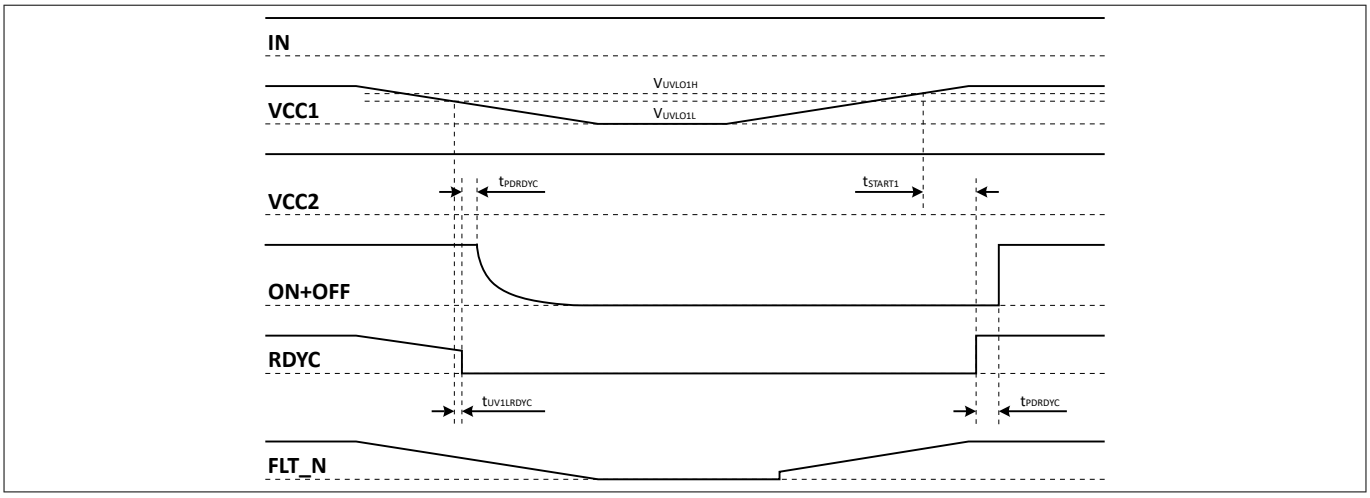

Figure 5 UVLO *VCC1* behavior

The gate driver IC supports an alternative UVLO detection in order to provide the means of analyzing the quality of the *VCC1* power supply. The number of unfiltered UVLO comparator output transitions is stored in the register **UV1FCNT**.UV1F_CNT and can be read out via I2C bus.

3.2.2 Output side under-voltage lockout, *VCC2* UVLO

To ensure correct operation of the output side and safe operation of the IGBT in the application, the gate driver IC is equipped with an output supply undervoltage lockout for *VCC2* versus *GND2*.

UVLO behavior during start-up:

- If the voltage at the supply terminal *VCC2* reaches the V_{UVLO2H} threshold the gate driver first needs to transfer the input side configuration to the output side before the *RDYC* output is released to **high**.
- The rising voltage at the output side triggers a soft-reset at the input side unless
  - a new set of parameters has been written while the output side was off or
  - the **RECOVER**.RESTORE bit was already set to 1_B.

  In that cases, the gate driver transfers the configuration to the output side and releases the *RDYC* output to **high**.

The complete start-up time t_{START2} depends on the duration of the user parameter configuration.

UVLO behavior during shut-down:

- If the supply voltage V_{VCC2} of the output side drops below V_{UVLO2L} the *RDYC* signal is switched to **low** and the output will be switched off.

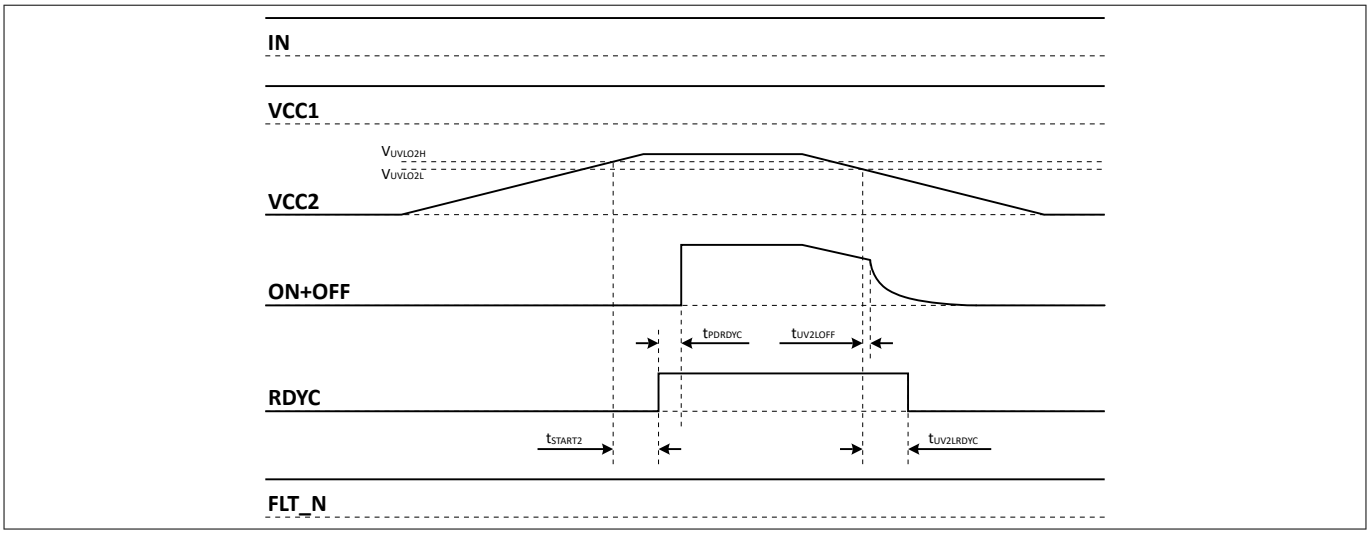

Figure 6 UVLO *VCC2* behavior

Any V_{UVLO2L} event will lead to a fault-off and a *RDYC* low level. The actual UVLO threshold selection is done in register **UVTLVL**.UVVCC2TL. Going below this threshold will set the UVLO event register bit **SECUVEVT**.UV_VCC2. If the supply voltage drops further the output side resets and needs a restart to configure its parameters again. If the supply voltage recovers immediately without triggering a reset the gate driver IC will also release *RDYC* to high.

The gate driver IC is supporting an alternative UVLO detection in order to provide the means of analyzing the quality of the *VCC2* power supply. The number of unfiltered UVLO2 comparator output transitions is stored in the register **UV2FCNT**.UV2F_CNT and can be read out via I2C bus.

In addition the 1ED38x0 family offers the feature to measure, monitor and readout the *VCC2* voltage through an integrated ADC to tune the system behavior and adjust according to system/IGBT requirements.

3.2.3 Output side undervoltage lockout, *VEE2* UVLO

The 1ED38x0 family offers three adjustable UVLO thresholds for the negative *VEE2* supply rail tailored for the typical operation conditions like -5 V or -8 V or -15 V supply versus *GND2*. Start up/shut down behavior is identical to a *VCC2* UVLO event assuming the *VEE2* UVLO is configured.

VEE2 UVLO is handled in the undervoltage event register **SECUVEVT**.UV_VEE2, an V_{UVLO3L} event will lead to a fault off and a *RDYC* low level. Configure the negative UVLO level in register **UVTLVL**.UVVEE2TL. A 00_B in this register disables the *VEE2* UVLO, e.g. for unipolar supply.

In addition the 1ED38x0 family offers the feature to measure, monitor, and readout the *VEE2* voltage through an integrated ADC to tune the system behavior and adjust according to system/IGBT requirements.

3.3 Input side logic

The input threshold levels are always CMOS compliant. The threshold levels are 30% of *VCC1* for low level and 70% of *VCC1* for high level.

The pins *IN* and *SCL* are for input only, and the pins *SDA*, *FLT_N*, and *RDYC* are input/output pins.

3.3.1 IN non-inverting driver input

The input pin has a positive logic. To turn on the associated IGBT apply a logic high signal at the *IN* pin. The 1ED38x0 family offers the adjustment of the *IN* input filter time with two trimmed values of typical 103 ns and 183 ns, as described in register **PSUPR**. The selected filter time directly influences the propagation delay.

3.3.2 *RDYC* ready status output, fault-off and fault clear input

The *RDYC* pin is a logic input and open drain output and has three different functions:

- *RDYC* as ready status output of all ready sources
- *RDYC* as fault-off input
- *RDYC* as fault clear input

In a typical application the *RDYC* pins of all gate driver ICs in the inverter are connected together and form a single wire *RDYC* signal.

An external pull-up resistor is required to ensure *RDYC* status output during operation.

3.3.2.1 Ready sources and configuration of not ready events

Not ready events are signaled at *RDYC* pin by switching the pin voltage to *GND1*. The gate driver offers configurable and non configurable not ready events.

Table 1 Ready sources and configuration registers

Ready source	Status register bit(s)	Configuration register bit(s)	Configuration description
Internal signal transmission	**COMERRST** .CRC_PRI, .CRC_SEC, .PCT_COM, .CRC_COM, .DCT_COM	n.a.	non-configurable, always enabled
VEE2 over *GND2*	n.a. - gate driver in reset	n.a.	non-configurable, always enabled
VCC1 supply UVLO	n.a. - gate driver in reset	n.a.	non-configurable, always enabled

(table continues...)

Table 1 (continued) Ready sources and configuration registers

Ready source	Status register bit(s)	Configuration register bit(s)	Configuration description
VCC2 supply UVLO[1]	**SECUVEVT**.UV_VCC2	n.a.	non-configurable, always enabled
VCC2 supply soft UVLO[2]	**SECUVEVT**.UVSVCC2	**UVSVCC2C**.UVSVCC2E	1_B enables soft UVLO monitoring
		UVSVCC2C.UVSVCC2L	configures soft UVLO level
		ADCCFG.VINT_EN	1_B enables ADC for internal voltages
VEE2 supply UVLO[1]	**SECUVEVT**.UV_VEE2	**UVTLVL**.UVVEE2TL	$>0_D$ enables UVLO monitoring
VEE2 supply soft UVLO[2]	**SECUVEVT**.UVSVEE2	**UVSVEE2C**.UVSVEE2E	1_B enables soft UVLO monitoring
		UVSVEE2C.UVSVEE2L	configures soft UVLO level
		ADCCFG.VINT_EN	1_B enables ADC for internal voltages
Gate driver configuration	**CHIPSTAT**.CONFIG, **CHIPSTAT**.ACTIVE	**I2CCFGOK**.I2CCFGOK	1_B locks user address configuration
		CFGOK.USER_OK	1_B locks user configuration

1) A complete loss of secondary supply voltage followed by a power-up can result in a soft-reset on the input side requiring a parameter re-configuration.
2) If soft UVLO is enabled, but ADC measurement is not enabled a soft UVLO event will be signaled due to ADC output value of 00_H.

3.3.2.2 *RDYC* fault-off input

Pulling *RDYC* to low disables the operation of the gate driver IC. The gate driver IC ignores *IN* signals as long as the *RDYC* pin stays low and the IC uses its fault-off function to switch-off the IGBT.

The defined minimum adjustable pulse width (**PSUPR**.IN_SUPR) makes the IC robust against glitches at *RDYC*. The gate driver ignores pulses with a shorter duration.

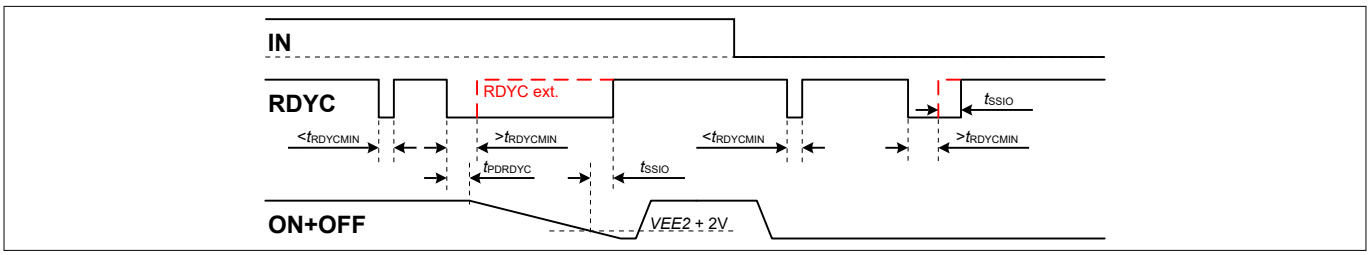

Figure 7 *RDYC* short pulse behavior of external manipulation of the *RDYC* pin

After an external *RDYC* low signal the IC is actively pulling *RDYC* to low until the voltage at *ON* pin falls below the *VEE2*+2 V threshold.

The *RDYC* fault-off input is active low.

3.3.2.3 *RDYC* fault clear input

To use the *RDYC* as fault clear input, the register bit **FCLR**.FCLR_CFG needs to be 0_B. Setting *RDYC* to low for longer than the fault clear time t_{CLRMIN} will reset the stored fault signal at pin *FLT_N* with the rising edge of *RDYC*. Additionally the following conditions have to be met as well:

- PWM *IN* pin level needs to be low,
- voltage at *ON* pin has dropped below the *VEE2*+2 V threshold, and
- triggering fault condition is no longer present.

The typical fault clear time t_{CLRMIN} is 1.0 µs.

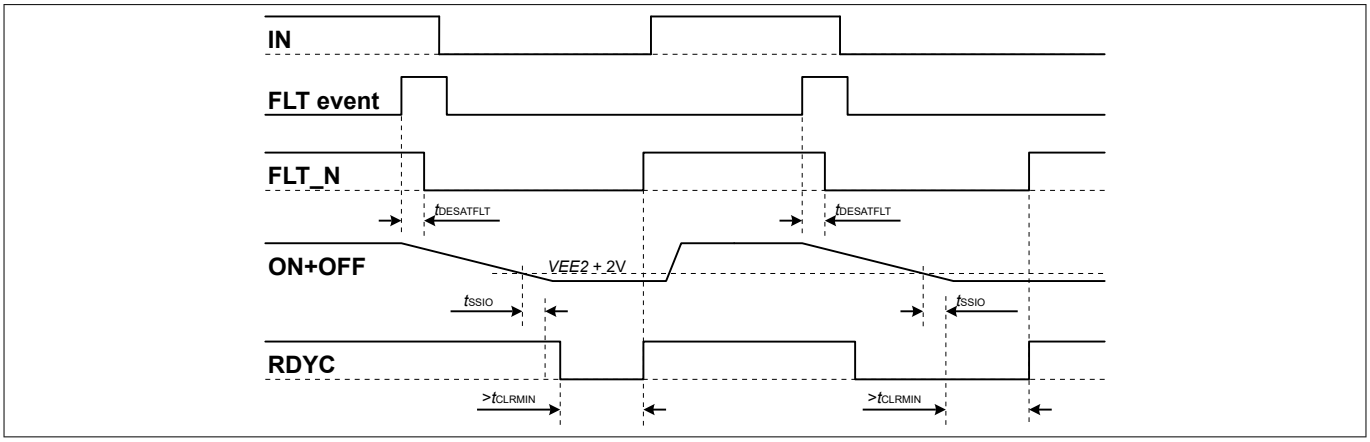

Figure 8 ***RDYC* fault clear timing**

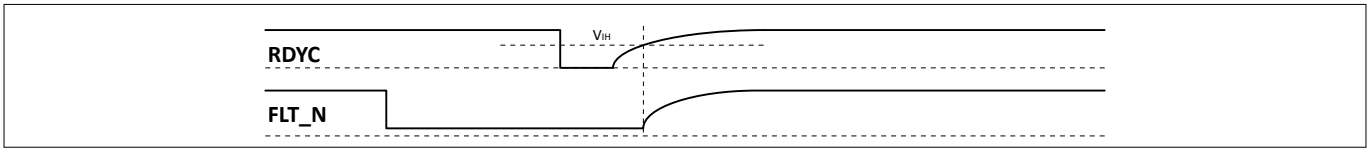

Figure 9 ***RDYC* fault clear rising edge to *FLT_N***

3.3.3 *FLT_N* status output and fault-off input

The *FLT_N* pin is a logic input and open drain output and has two different functions:

- *FLT_N* as fault-status output for fault sources
- *FLT_N* as fault-off input

In a typical application the *FLT_N* pins of all gate driver ICs in the inverter are connected together and form a single wire *FLT_N* signal.

An external pull-up-resistor is required to ensure *FLT_N* status output during operation.

3.3.3.1 Fault sources and configuration of fault events

Fault events are signaled at *FLT_N* pin by switching the pin voltage level to *GND1*. The gate driver offers configurable and non-configurable fault events.

Table 2 Fault sources and configuration registers

Fault source	Status register bit(s)	Configuration register bit	Configuration description
Over temperature protection	**FLTEVT** .OTP_EVT	n.a.	non-configurable, always enabled
Over temperature warning	**FLTEVT**.OTW_EVT	**OTWCFG**.OTW_ACFG	0_B disables OTW event
Desaturation detection of IGBT	**FLTEVT** .D1_EVT, .D2_EVT	**D1LVL**.D_DIS	1_B disables DESAT completely, no event monitoring
Secondary desaturation detection of IGBT	**FLTEVT**.D2_EVT	**D2LVL**.D2_ACFG	0_B disables DESAT2 event
Switch-off timeout	**FLTEVT**.SOTO_EVT	**SOTOUT**.SOTOUT_F	0_B disables timeout event
CLAMP pin voltage limit	**FLTEVT**.VEXTFLT	**ADCCFG**.VEXTL_EN	0_B disables limit event

The status register bits still highlight a possible fault event even if their configuration register disables the triggering of *FLT_N*. The desaturation detection configuration with register bit **D1LVL**.D_DIS however disables this part of the integrated circuit and therefore disables also both DESAT events.

3.3.3.2 *FLT_N* fault-off input

Pulling *FLT_N* to low disables the operation of the gate driver IC. The gate driver IC ignores *IN* signals as long as the *FLT_N* pin stays low and the IC uses its fault-off function to switch-off the IGBT.

The defined minimum adjustable pulse width (**PSUPR**.IN_SUPR) makes the gate driver IC robust against glitches at *FLT_N*.

After a low at the *FLT_N* pin either internally or externally applied, the fault event is latched until cleared.

The *FLT_N* fault-off input is active low.

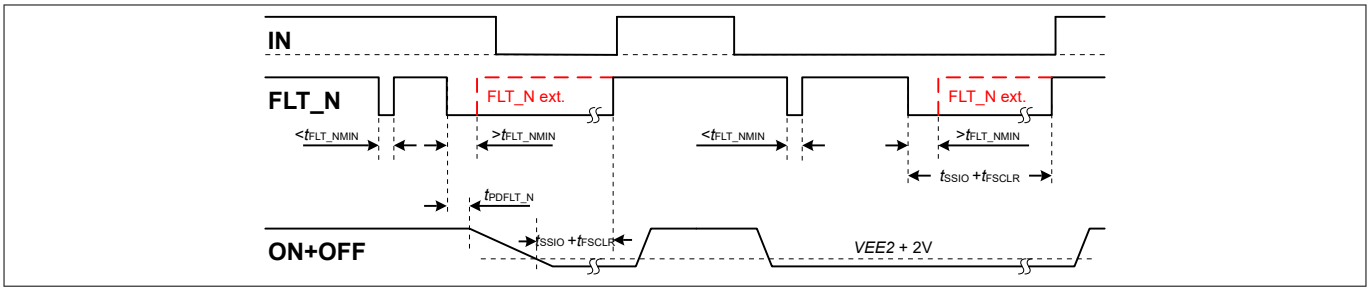

Figure 10 *FLT_N* short pulse behavior of external manipulation of the *FLT_N* pin with self clear

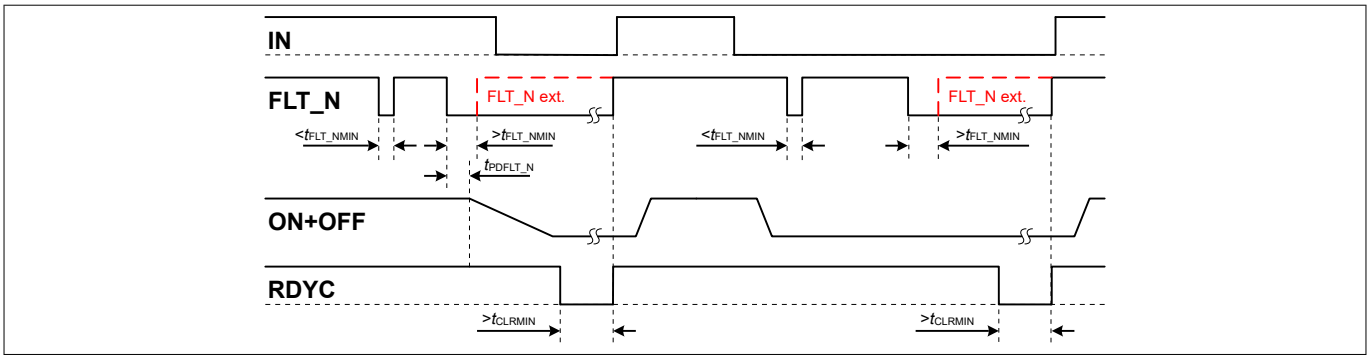

Figure 11 ***FLT_N* short pulse behavior of external manipulation of the *FLT_N* pin cleared by *RDYC***

3.3.4 I2C bus

The 1ED38x0 family is equipped with a standard I2C bus interface to configure various parameters of the gate driver IC and read out measurement and monitoring registers.

Key I2C features include:

- I2C bus target device implementing all mandatory bus protocols for the specification UM10204 rev. 7
- 7 bit device addresses for individual and group addressing
- Initial I2C device address: $1A_H$ (MSB aligned, bits 7:1)
- Signal voltage level compatible to 3.3 V and 5 V
- Supported bus speeds at gate driver data pin (*SDA*) and clock pin (*SCL*):
  - standard-mode (Sm), with bit rates up to 100 kbit/s
  - fast-mode (Fm), with bit rates up to 400 kbit/s
  - fast-mode plus (FM+), with bit rates up to 1 Mbit/s

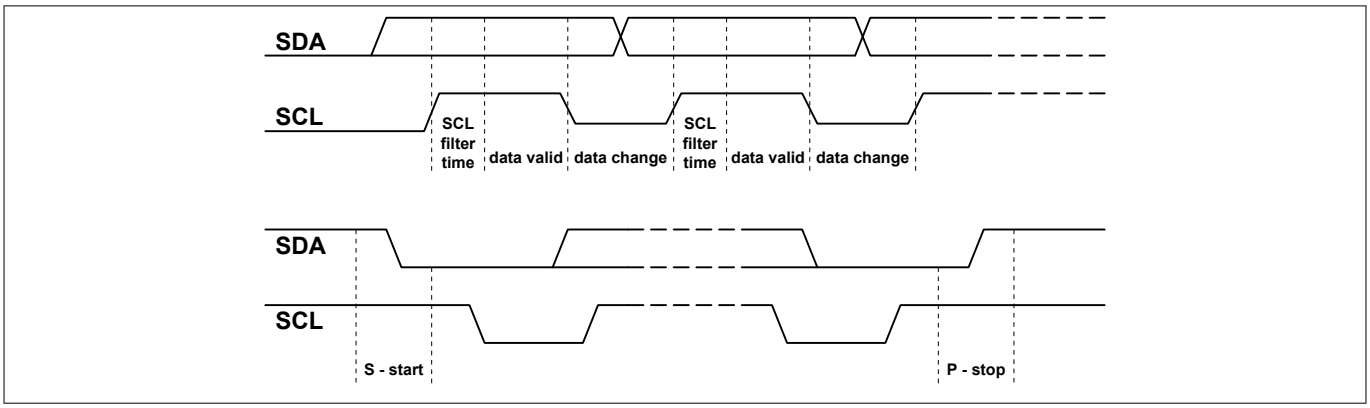

Figure 12 **Start, stop and data conditions**

All I2C bus commands start with a start condition and stops with a stop condition. The data at the *SDA* pin gets valid if *SCL* level is above the CMOS level threshold and the filter time has elapsed.

3.3.4.1 I2C bus byte format

All register addresses and data bytes of the 1ED38x0 family are 8 bit values. The serial data line (*SDA*) transmits and receives with the most significant bit (MSB) first.

There are two register areas implemented:

- register addresses from 00_H to 25_H are used for configuration and
- register addresses from 26_H to 37_H are used as status registers.

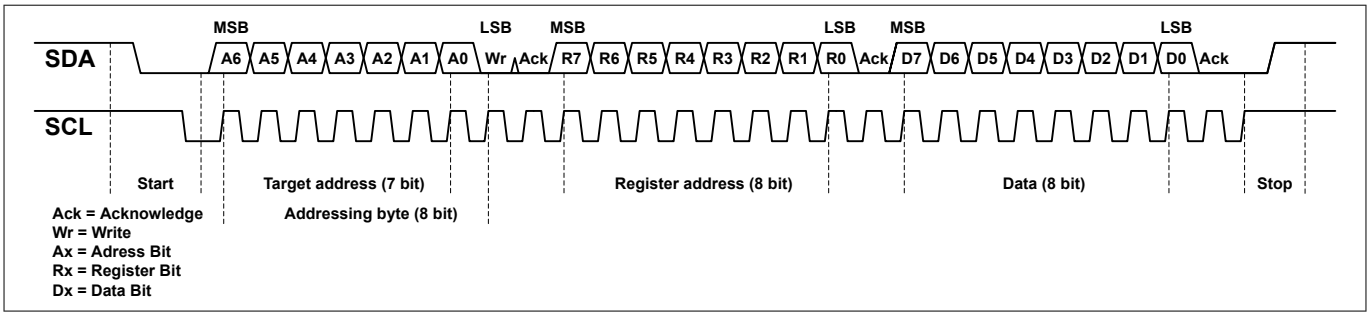

Figure 13 Write byte format (starting at register address)

The addressing byte is transmitted MSB first and includes the 7 bit I2C address followed by the $\overline{Wr}$/Rd bit at LSB position. Throughout this documentation, the hexadecimal device addresses are always written in this 8 bit format. In the configuration registers the 7 bit I2C addresses are aligned to LSB without the $\overline{Wr}$/Rd bit.

Bit	MSB 7	6	5	4	3	2	1	LSB 0
Address register byte	res	A6	A5	A4	A3	A2	A1	A0
SDA addressing byte	A6	A5	A4	A3	A2	A1	A0	W/R
Default address: $1A_H$	0	0	0	1	1	0	1	0

Figure 14 I2C address alignment in register and during transmission

All registers have a data size of 8 bit, but not all bits are implemented in all registers. Not implemented data bits read as 0_B unless specified otherwise.

3.3.4.2 I2C bus read/write operation

Read and write operations are initiated by the I2C controller (microcontroller).

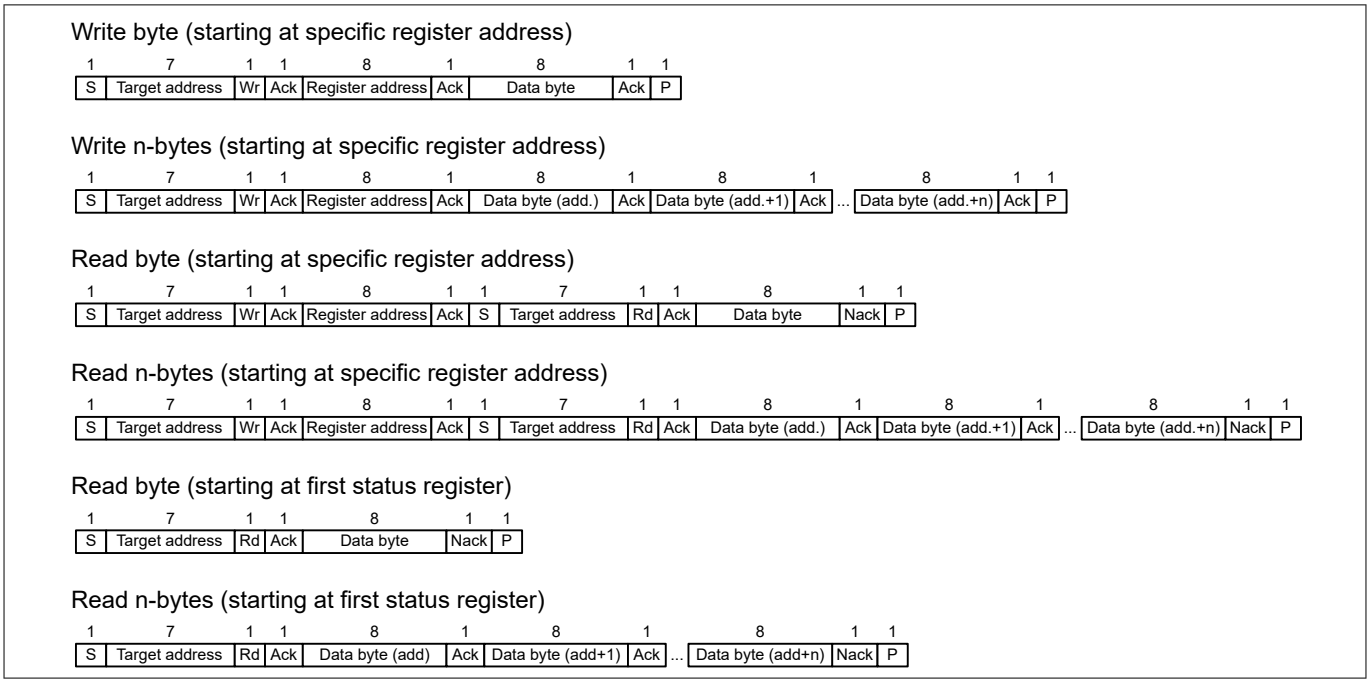

Figure 15 Read/write operation

Write byte and write n-bytes to register

1. I2C controller (microcontroller) to initiate write with start bit followed by 7 bit target address (gate driver) and write bit
2. Target gate driver answers with acknowledge (ACK)
3. Controller to send 8 bit target register address
4. Target gate driver answers with ACK and sets internal register address
5. Controller to send the data byte for current register
6. Target gate driver answers with ACK if target register is writable and increases internal register address by 1_H
7. Steps 5 and 6 can be repeated to send multiple bytes to consecutive registers
8. Controller finalizes data write by sending a stop bit

Read byte and read n-bytes from specific register

1. I2C controller (microcontroller) to initiate write with start bit followed by 7 bit target address (gate driver) and write bit
2. Target gate driver answers with acknowledge (ACK)
3. Controller to send 8 bit target register address
4. Target gate driver answers with ACK and sets internal register address
5. Controller begins new read session with start bit followed by 7 bit target address (gate driver) and read bit
6. Target gate driver answers with acknowledge (ACK)
7. Target gate driver sends 8 bit data byte from current register and increases internal register address by 1_H
8. Controller is responsible for ACK/NACK to control read of consecutive registers
   a. When responding with ACK, the controller is waiting for another data byte and the sequence continues at number 7
   b. When responding with NACK, the controller terminates the read session
9. Controller finalized data read by sending a stop bit

Read byte and read n-bytes from status register

1. I2C controller (microcontroller) to initiate read with start bit followed by 7 bit target address (gate driver) and read bit
2. Without a preceding register write the gate driver sets the internal register address to the first status register
3. Target gate driver answers with acknowledge (ACK)
4. Target gate driver sends 8 bit data byte from current register and increases internal register address by 1_H
5. Controller is responsible for ACK/NACK to control read of consecutive registers
   a. When responding with ACK, the controller is waiting for another data byte and the sequence continues at number 4
   b. When responding with NACK, the controller terminates the read session
6. Controller finalized data read by sending a stop bit

3.3.4.3 I2C bus address

The gate driver IC has two configurable 7 bit addresses:

- device address **I2CADD**, e.g. for dedicated read out or configuration
- group address **I2CGADD** to configure all gate driver ICs in the same group within one write cycle

Both addresses have to be set at start up. Configured addresses have to differ from the initial LSB aligned I2C device address $0D_H$.

Address configuration after power up

The gate driver IC is configured to start up with the initial I2C device address. To set the device addresses the input side has to be powered up and *VCC1* is stable above the turn-on undervoltage lockout level. At this point, the gate driver IC is still in OFF state.

Address configuration steps:

1. Set *RDYC* to low to deactivate the gate driver IC
2. Set *IN* to high to select the gate driver IC (chip select, IC enters address configuration state)
3. Send an I2C write command with 4 data bytes to the initial MSB aligned I2C device address $1A_H$
   a. Data byte 1: Target device register address 00_H (Register**I2CADD**)
   b. Data bytes 2, 3: 7 bit device address and 7 bit group address aligned from bit 6 to bit 0
   c. Data byte 4: value for **I2CCFGOK** = 01_H , to accept and lock the address registers
4. All data bytes will be acknowledged by the gate driver IC to indicate successful transmission and address acceptance, the gate driver IC enters parameter configuration state
5. Release *IN* and *RDYC*, the gate driver IC is now addressable using the addresses transferred

Address configuration during gate driver operation

To re-configure the I2C addresses while the gate driver IC is already in normal operation mode it needs to be switched to the address configuration state by executing the following steps:

1. Set *RDYC* to low, entering not ready state
2. Send an I2C write command with 2 data bytes to the current device address
   a. Data byte 1: Target device register address $1C_H$ (Register **CFGOK**)
   b. Data byte 2: Value 00_H, to enter parameter configuration state
3. Send again an I2C write command with 2 data bytes to the current device address
   a. Data byte 1: Target device register address 02_H (Register **I2CCFGOK**)
   b. Data byte 2: Value 00_H, to enter address configuration state and unlock address registers
4. Follow the steps 2 to 5 of the address configuration after power up to complete the address re-configuration

Address configuration notes

Attention**:* ***The gate driver IC does not acknowledge (NACK) a write of 01_H to I2CCFGOK if the address registers contain an invalid address.

***Note**:* *Reserved I2C bus addresses are not allowed but will be neither checked nor will the gate driver IC send a NACK (not acknowledge) in response to such an address.*

3.4 Operating states

The 1ED38x0 family of gate driver ICs can take the following states:

- OFF state, device not powered
- Address configuration state, the I2C addresses can be set, gate driver IC is not active
- Parameter configuration state, the gate driver parameters can be set and changed, gate driver IC is not active
- Parameter transfer state, the gate driver IC is transferring the parameters from input side to output side, gate driver IC is not active
- Normal operation, gate driver IC is active, ON and OFF outputs are following the IN signal, registers are read only
- Not ready state, gate driver IC is switched off according to fault off settings, status signaled by a low at *RDYC* pin
- Fault state, gate driver IC is switched off according to fault off settings, status signaled by a low at *FLT_N* pin
- See later section for additional sub states on fault clear, soft-reset, recover, and restore of parameter configuration after power loss

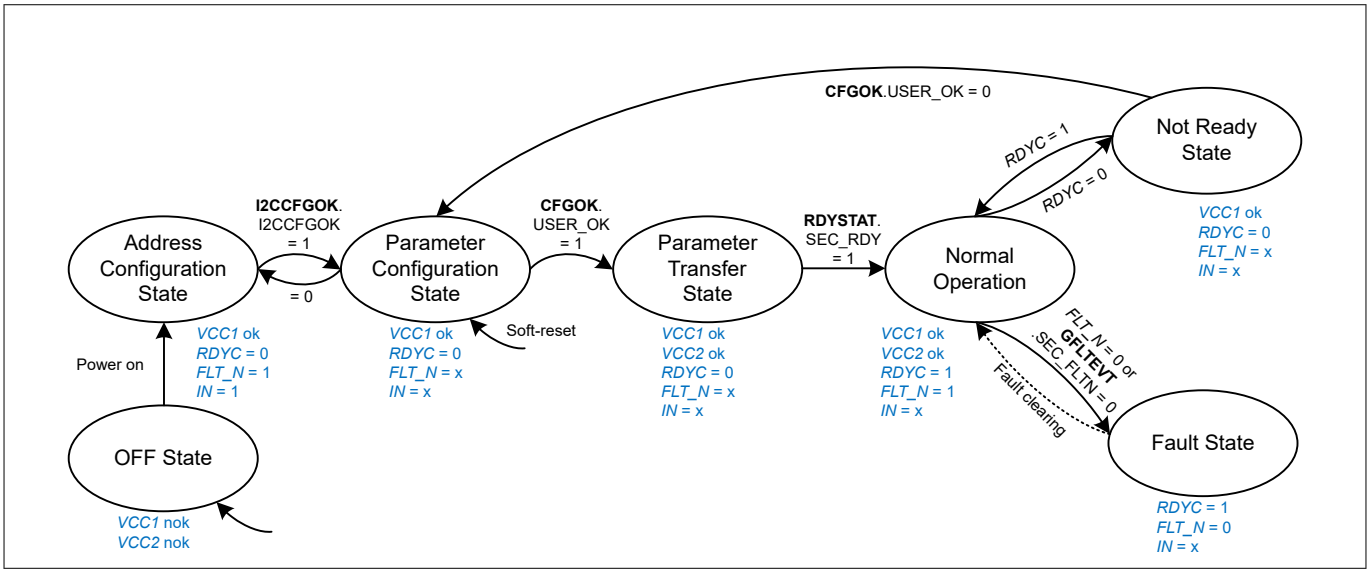

Figure 16 Operating state diagram

- Pin names in uppercase italic letters, supply pin status listed as either okay (ok) or not okay (nok) and for logic pins with low (0), high (1), or either (x)
- Register names in uppercase bold letters followed by the register bit name and value
- States in bubbles with transitions marked by arrows with conditions attached

3.4.1 OFF state

The OFF state is the default state of a non-powered gate driver IC. No operation is possible.

- Input side is not powered.
- Output side is off while powered or in active shut down while unpowered.
- All commands besides input chip power-up are ignored.

Signal condition to enter state:

- *VCC1* power down

Signal condition to leave state:

- to address configuration state: *VCC1* power ok, *VCC1* has passed upper UVLO1 threshold, *IN* is high

3.4.2 Address configuration state

The address configuration state is used to enter or change the I2C device address and is the first state after the OFF state. The gate driver IC is ready to receive the device addresses.

Register access in this state:

- **I2CADD**, I2C device address: read/write
- **I2CGADD**, group address: read/write
- **I2CCFGOK**, address configuration access lock register: read/write

Signal condition to enter state:

- from OFF state: *VCC1* power ok, *VCC1* is passing upper UVLO1 threshold, *IN* is high
- from parameter configuration state: register bit **I2CCFGOK**.I2CCFGOK set to 0_B

Signal condition to leave state:

- to parameter configuration state: registers **I2CADD** and **I2CGADD** set according to the I2C and gate driver IC address requirements, register bit **I2CCFGOK**.I2CCFGOK set to 1_B

3.4.3 Parameter configuration state

The parameter configuration state is used to configure or change device function and parameter and is the default state after address configuration state.

Register access in this state:

- address registers: read only
- **I2CCFGOK**: read/write
- configuration registers: read/write
- status register: read only

Signal condition to enter state:

- from address configuration state: register bit **I2CCFGOK**.I2CCFGOK set to 1_B
- from not ready state: register bit **CFGOK**.USER_OK set to 0_B
- from a soft-reset

Signal condition to leave state:

- to parameter transfer state: register bit **CFGOK**.USER_OK set to 1_B
- to address configuration state: register bit **I2CCFGOK**.I2CCFGOK set to 0_B

3.4.4 Parameter transfer state

The parameter transfer state is used to transfer the configuration registers from primary to secondary side.

Register access in this state:

- status, configuration and address registers: read only

Signal condition to enter state:

- from parameter configuration state: register bit **CFGOK** .USER_OK set to 1_B

Signal condition to leave state:

- to normal operation state: *VCC2*/*VEE2* power okay and register bit **RDYSTAT**.SEC_RDY set to 1_B

3.4.5 Normal operation state

The normal operation state is used for status register read and PWM operation.

Register access in this state:

- status, configuration and address registers: read only

Signal condition to enter state:

- from parameter transfer state: register bit **RDYSTAT**.SEC_RDY set to 1_B
- from fault state: intermediate states of fault clear flow
- from not ready state: *RDYC* signal released

Signal condition to leave state:

- to fault state: *FLT_N* signal externally pulled to low or register bit **GFLTEVT**.SEC_FLTN = 0_B indicating a fault source from output side
- to not ready state: *RDYC* signal pulled to low

3.4.6 Not ready state

The not ready state is used to indicate an inactive gate driver IC with PWM operation disabled.

Register access in this state:

- **CFGOK** register: read/write
- status, configuration and address registers: read only

Signal condition to enter state:

- from normal operation state: *RDYC* signal pulled to low

Signal condition to leave state:

- to normal operation state: *RDYC* signal released
- to parameter configuration state: **CFGOK**.USER_OK set to 0_B

3.4.7 Fault state

The fault state is used during and after a fault turn off until the fault condition is cleared.

Register access in this state:

- status, configuration and address registers: read only

Signal condition to enter state:

- from normal operation state: *FLT_N* signal externally pulled to low or register bit **GFLTEVT**.SEC_FLTN = 0_B indicating a fault source detected by the output side of the gate driver IC

Signal condition and flow to leave state:

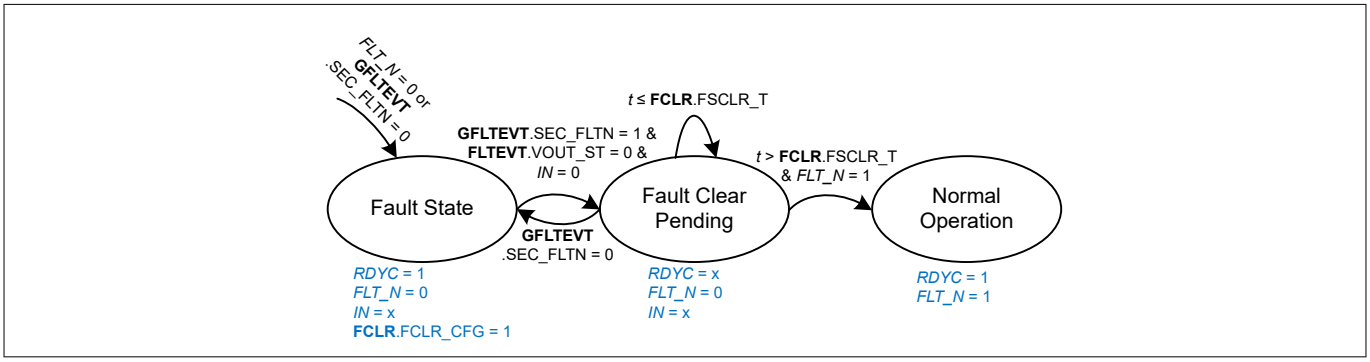

Figure 17 Fault clear using self clear timer

- Pin names in uppercase italic letters, supply pin status listed as either okay (ok) or not okay (nok) and for logic pins with low (0), high (1), or either (x)
- Register names in uppercase bold letters followed by the register bit name and value
- States in bubbles with transitions marked by arrows with conditions attached

Register bit **FCLR**.FCLR_CFG = 1_B (Fault clear using self-clear timer)

1. register bit **GFLTEVT**.SEC_FLTN = 1_B, indicating that the fault source is no longer triggering and the fault off sequence is completed
2. register bit **FLTEVT**.VOUT_ST = 0_B, indicating that the output switch-off is done
3. *IN* pin switched to low to enter the fault clear pending state
4. staying in fault clear pending for the duration of the configured self clear time **FCLR**.FSCLR_T without having a new fault trigger **GFLTEVT**.SEC_FLTN = 0_B
5. after fulfilling the above conditions the gate driver IC releases the *FLT_N* pin and returns to normal operation state

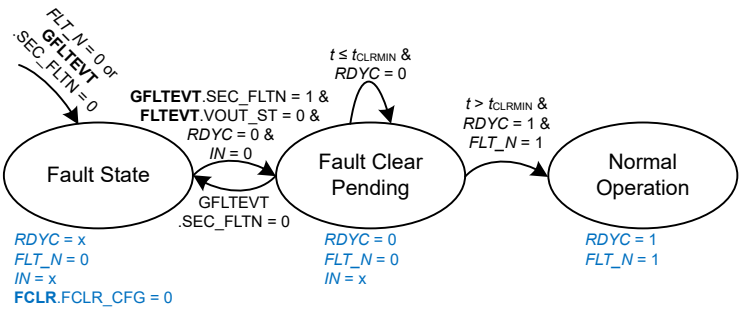

Figure 18 Fault clear using *RDYC* pin

- Pin names in uppercase italic letters, supply pin status listed as either okay (ok) or not okay (nok) and for logic pins with low (0), high (1), or either (x)
- Register names in uppercase bold letters followed by the register bit name and value
- States in bubbles with transitions marked by arrows with conditions attached

Register bit **FCLR**.FCLR_CFG = 0_B (Fault clear using *RDYC* pin)

1. register bit **GFLTEVT**.SEC_FLTN = 1_B, indicating that the fault source is no longer triggering and the fault off sequence is completed
2. register bit **FLTEVT**.VOUT_ST = 0_B, indicating that the output switch-off is done
3. *IN* pin switched to low
4. *RDYC* pin switched to low to enter the fault clear pending state
5. staying in fault clear pending for the duration of the fault clear time t_{CLRMIN} without having a new fault trigger **GFLTEVT**.SEC_FLTN = 0_B
6. *RDYC* pin released to high
7. after fulfilling the above conditions the gate driver releases the *FLT_N* pin and returns to normal operation state

3.4.8 Soft-reset, restore and recovery

The 1ED38x0 family offers three configuration related modes:

- soft-reset of all configuration registers to return to their reset values
- automatic restore of all output registers after an output not ready event
- automatic recovery of all input registers after an input not ready event

Both restore and recovery are independent and can be enabled at the same time. The automatic restore or recovery can only work if one driver side stays supplied.

3.4.8.1 Soft-reset

The soft-reset configuration register bit **CLEARREG**.SOFT_RST allows to clear all configuration registers. Unless the automatic restore of output registers is configured, a soft-reset will also be triggered after a severe output side UVLO event.

After a reset the registers will have their reset values and the gate driver IC returns to the parameter configuration state. The I2C address registers **I2CADD**, **I2CGADD**, and **I2CCFGOK** will not be affected, only the configuration registers need a new set of parameters.

3.4.8.2 Automatic configuration restore from input side

The gate driver IC is equipped with an advanced configuration restore function. If the output side lost its configuration (e.g. *VCC2* UVLO triggered soft-reset) the input side is trying to restore the data from the input side to the output side as soon as the output side is ready again.

The function is configured in register bit **RECOVER**.RESTORE

- 0_B = restore not active, the gate driver IC will
  - perform a soft-reset,
  - clear parameter configuration bit **CFGOK**.USER_OK to 0_B, and
  - stay in parameter configuration state and wait for the user to re-configure the settings
- 1_B = restore active, the gate driver IC will
  - restore the output side and
  - release *RDYC* and enter normal operation state

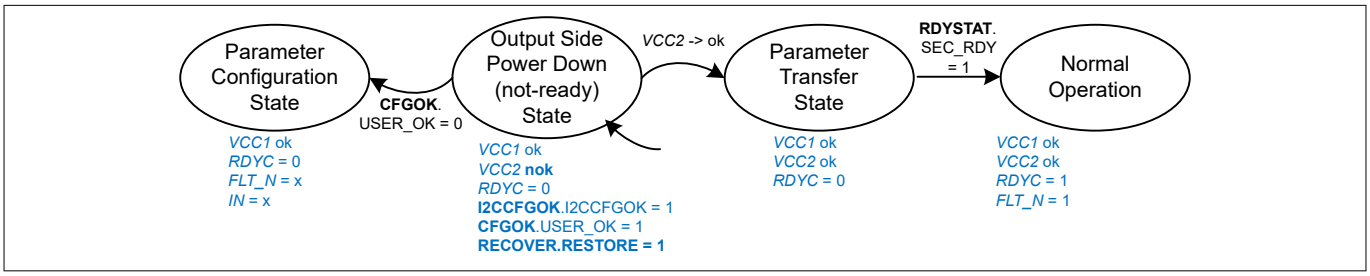

Figure 19 State diagram of output configuration restore from input side

- Pin names in uppercase italic letters, supply pin status listed as either okay (ok) or not okay (nok) and for logic pins with low (0), high (1), or either (x)
- Register names in uppercase bold letters followed by the register bit name and value
- States in bubbles with transitions marked by arrows with conditions attached

The output side power down state is a not ready state where additional conditions apply. The regular path to parameter configuration state is also possible. Otherwise the gate driver IC leaves this state to parameter transfer state after a successful output side power up. After the register transfer the status register bit **RDYSTAT**.SEC_RDY will be set to 1_B and the gate driver IC returns to normal operation state.

A successful restore will be signaled by the sticky bit in the register bit **EVTSTICK**.SRESTORE.

3.4.8.3 Automatic configuration recovery from output side

The gate driver IC is equipped with an advanced configuration recovery function. If the input side lost its configuration (e.g. UVLO event at *VCC1*) the input side is trying to recover the data from the output side as soon as the input side is ready again.

The function is configured in register **RECOVER**.RECOVER:

- 0_B recover not active, gate driver IC will
  - perform a soft-reset,

- clear parameter configuration bit **CFGOK**.USER_OK and **I2CCFGOK**.I2CCFGOK to 0_B, and
- returns to OFF state

- 1_B recover active, gate driver IC will
  - recover the configuration from the output side,
  - release *RDYC*, and
  - enter normal operation state

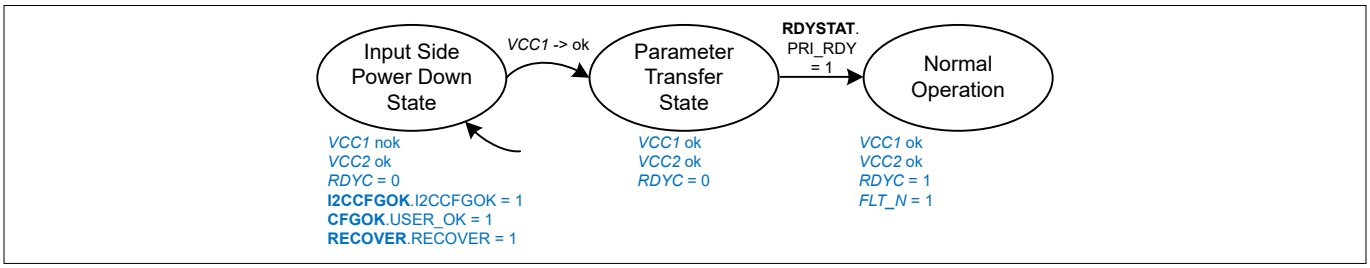

Figure 20 State diagram of input configuration recover from output side

- Pin names in uppercase italic letters, supply pin status listed as either okay (ok) or not okay (nok) and for logic pins with low (0), high (1), or either (x)
- Register names in uppercase bold letters followed by the register bit name and value
- States in bubbles with transitions marked by arrows with conditions attached

The input side power down state is an extended off state. The gate driver IC leaves this state to parameter transfer state after a successful input side power up. After the register transfer the status register **RDYSTAT**.PRI_RDY will be set to 1_B and the gate driver IC returns to normal operation state.

A successful recover will be signaled by the sticky bit in the register **EVTSTICK**.SRECOVER.

3.5 Measurement

The 1ED38x0 family offers several measurement functions and uses a free running successive-approximation-register analog-to-digital converter (SAR-ADC). The SAR-ADC has a 8 bit resolution and the results are digitally filtered with a three-point-two pass moving average filter.

Following internal and external parameter measurements are available:

- **ADCMVCC2** Measurement *VCC2* to *VEE2*
- **ADCMVDIF** Measurement and calculation *VCC2* to *GND2*
- **ADCMGND2** Measurement *GND2* to *VEE2*
- **ADCMTEMP** Measurement junction temperature T_J
- **ADCMVEXT** Measurement external voltages, e.g. NTC

Measurement result registers will be updated sequentially depending on selected sample sources. The update rate is typically below 100 µs.

The SAR-ADC configuration register **ADCCFG** is used to activate measurement channels and external voltage compare behavior. Measurement of internal junction temperature is always active. Activated SAR-ADC measurements also enable monitoring functions.

3.6 Monitoring

The 1ED38x0 family offers many monitoring functions. The monitoring functions can be divided into:

- Hardware based functions

  The hardware based monitoring functions use dedicated hardware, e.g. fast UVLO.
- ADC-based functions

The ADC-based functions gather measured values of different parameters and compare them with limit values. Enable ADC measurement to use related ADC-based monitoring functions.

Both groups contain non-configurable and configurable functions.

Non-configurable hardware monitoring:

- *VEE2* over *GND2*, e.g. *VEE2* connection failure
- Turn-off monitoring, V_{ON} > VEE2+2 V (**FLTEVT**.VOUT_ST = 1_B)
- Gate voltage monitoring below VEE2+2 V (**PINSTAT**.ON_PIN = 1_B)
- Gate voltage monitoring above VCC2-2 V (**PINSTAT**.OFF_PIN = 1_B)
- Gate voltage monitoring above V_{TLTOFF} (**PINSTAT**.TLTO_LVL = 1_B)
- Pin status monitoring of *IN* pin high (**PINSTAT**.PWM_IN = 1_B)
- Pin status monitoring of *RDYC* pin high (**PINSTAT**.RDYC = 1_B)
- Pin status monitoring of *FLT_N* pin high (**PINSTAT**.FLT_N = 1_B)
- *VCC1* supply voltage UVLO spike detection (**UV1FCNT**)
- *VCC2* supply voltage UVLO spike detection (**UV2FCNT**)

Configurable hardware monitoring:

- Normal *VCC2* supply UVLO event (**SECUVEVT**.UV_VCC2)
- Normal *VEE2* supply UVLO event (**SECUVEVT**.UV_VEE2)
- Switch-off timeout, V_{ON} > VEE2+2 V and maximal switch-off timeout time elapsed (**FLTEVT**.SOTO_EVT)

Non-configurable ADC-based monitoring:

- Over temperature protection event (**FLTEVT**.OTP_EVT)

Configurable ADC-based monitoring:

- VCC2 supply soft UVLO event (**SECUVEVT**.UVSVCC2)
- VEE2 supply soft UVLO event (**SECUVEVT**.UVSVEE2)
- External voltage compare event (**FLTEVT**.VEXTFLT)
- Over temperature warning event (**FLTEVT**.OTW_EVT)

Gate driver reaction to *VEE2* over *GND2* detected

A *VEE2* over *GND2* event triggers the following sequence:

1. IC detects *VEE2* over *GND2*
2. IC initiates an output side reset, including
   - Activation of active shutdown as a safety measure
   - Resetting all configuration registers to their reset values
   - Ignoring all PWM signals and reporting a not ready state
3. IC listens to its previously configured I2C address
   - If **RECOVER**.RESTORE = 1_B, the gate driver IC will restore the output side configuration from the input side
   - If **RECOVER**.RESTORE = 0_B, the gate driver IC performs a soft-reset and waits for a re-configuration via I2C bus
4. After the configuration of the output side is valid again, the IC continues operation

***Note**: To avoid unintended VEE2 over GND2 detection, take extra care in power supply design, routing, and capacitive blocking at these pins.*

3.7 Desaturation protection

The desaturation detection circuit protects the external IGBT from destruction at a short circuit. The desaturation protection follows the given sequence:

1. Voltage at *DESAT* pin reaches DESAT threshold level, e.g. 9.18 V, for a period of time exceeding the filter time
2. Gate driver IC output switches the external IGBT off, using the defined fault off method
3. Gate driver IC switches *FLT_N* pin to low to indicate the fault to a connected microcontroller
4. Short circuit situation is resolved
   - after the voltage at the *ON* pin has dropped below the *VEE2*+2 V threshold,
   - no other fault condition is present,
   - the input has been turned off and
   - the fault has been cleared using the defined fault clear method

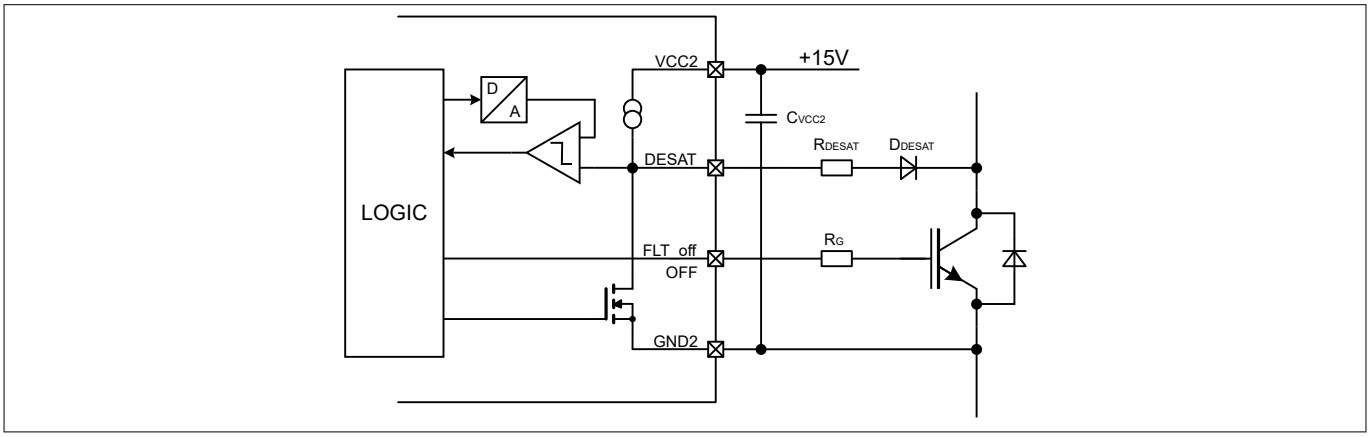

Figure 21 DESAT circuit (only relevant pins shown)

The high-precision internal current source results in a minimum impact on the DESAT detection variation.

3.7.1 DESAT behavior

The DESAT function offers a leading edge blanking time and filters to optimize the DESAT detection for application usage.

The leading edge blanking inhibits threshold detection during an IGBT turn on phase. The typical IGBT turn on behavior starts with charging of the gate, commutation of the application load current and finally V_{CE} voltage decrease to V_{CEsat} voltage levels. To prevent the gate driver IC from detecting a false DESAT event, leading edge blanking pauses the DESAT circuit until the time $t_{DESATleb}$ has elapsed.

Following the leading edge blanking time, the gate driver IC forces the DESAT current into the external DESAT circuit. The current typically flows through a protection resistor, a fast high voltage diode and the collector-emitter path of the IGBT. The resulting voltage at the *DESAT* pin is the sum of the voltage drop across this path.

During a short circuit condition, the V_{CE} voltage increases, resulting in a reverse polarity condition of the DESAT diode. The remaining DESAT current also increases the voltage level at the *DESAT* pin and triggers the DESAT threshold. If the pin voltage level stays above the threshold for the duration of the DESAT filter time $t_{DESATfilter}$, the gate driver IC registers the DESAT event and acts accordingly.

The internal processing time after DESAT threshold crossing, filtering and beginning of fault-off is defined as $t_{DESATOUT}$. The duration of the gate discharge during fault-off is defined as $t_{FLTOFFtot}$ and is depending on the defined fault off function and the gate load.

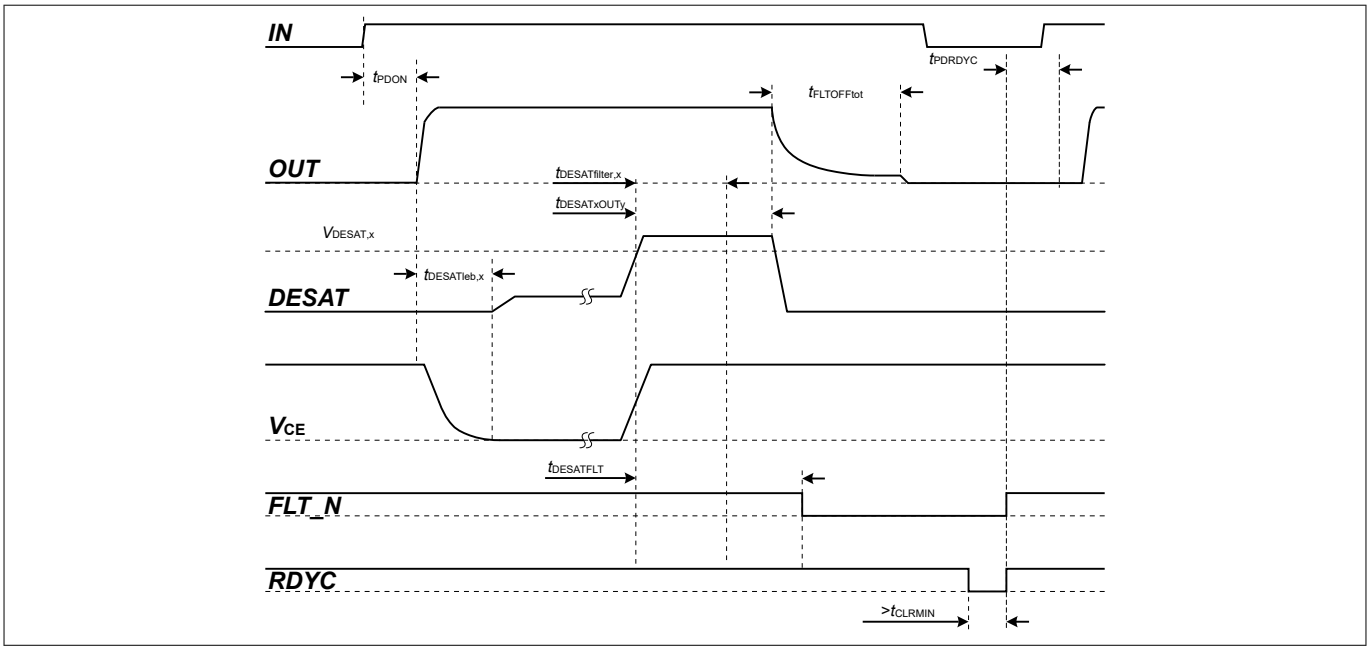

Figure 22 DESAT timing with leading edge blanking, filter and reaction times

3.7.2 DESAT adjustment

The 1ED38x0 family has two sets of DESAT sensors with individual configuration registers to tailor the gate driver IC to different requirements for overcurrent turn-off or monitoring.

3.7.2.1 DESAT1 adjustment

DESAT1 is the classical desaturation detection function, and its behavior is adjustable by the following parameters:

- DESAT1 voltage threshold level, register field **D1LVL**.D1_V_LVL
- DESAT voltage temperature compensation, register field **DTECOR**.DTE_COEF/DTE_OS
- DESAT leading edge blanking time, register field **DLEBT**.D_LEB_T
- DESAT1 filter time, register field **D1FILT**.D1FILT_T
- DESAT1 filter type, register field **D1FILT**.D1FILT_C

A DESAT1 event sets the fault status event bit D1_EVT in the register field **FLTEVT**, starts a fault turn-off sequence and signals via *FLT_N* to low a fault status event.

3.7.2.2 DESAT2 adjustment

DESAT2 is an additional and partly independent desaturation detection sensor and its behavior is configurable by the following parameters.

- DESAT2 voltage threshold level, register **D2LVL**.D2_V_LVL
- DESAT voltage temperature compensation, register **DTECOR**.DTE_COEF/DTE_OS
- DESAT leading edge blanking time, register **DLEBT**.D_LEB_T
- DESAT2 filter time, register **D2FILT**.D2FILT_T
- DESAT2 filter type, register **D2FILT**.D2FILT_C
- DESAT2 event counter limit, register **D2CNTLIM**.D2CNTLIM
- DESAT2 long time filter, IN counter decrement DESAT2 events, register **D2CNTDEC**.D2CNTDEC

- DESAT2 enable during two-level turn-off, register **D2LVL**.D2_TLCFG
- DESAT2 action configuration, register **D2LVL**.D2_ACFG

The DESAT2 detection block and its configuration suites various application use cases. Besides the DESAT voltage filter for noise and spike filtering, the 1ED38x0 family supports with two counters a long time filter setup. With this setup the DESAT2 can be tailored to different applications.

- Duplication of DESAT1 with different voltage and timing setting:

  different noise filter settings compared to DESAT1, e.g. short DESAT1 filter time and high DESAT1 threshold for fast events (low impedance short circuit) and long DESAT2 filter time and lower DESAT2 threshold for slow events (high impedance short circuit)
- Repetitive DESAT event detection:

  fast DESAT2 detection (DESAT2 filter time shorter than DESAT1 filter time) and event counter or DESAT2 event density in relation to *IN* input; density detection is used if the effect is mainly a thermal effect of short DESAT events
- Monitoring of DESAT2 events:
  - with lower voltage and filter settings than DESAT1 for margin analysis, either through counting events or through event density
  - with lower voltage and filter settings than DESAT1 for early warning
  - tuning of two-level turn-off to monitor under which operating conditions the IGBT desaturates during the TLTOff plateau.

Therefore the DESAT2 fault status bit **FLTEVT**.D2_EVT is set either at a single DESAT2 event or after multiple counted DESAT2 events.

DESAT2 action configuration is set in the register bit **D2LVL**.D2_ACFG:

Table 3 DESAT2 action configuration and status bit clearing

It determines the behavior of the gate driver IC after the configured DESAT2 fault status occurred. This bit also defines how the corresponding status register bit **FLTEVT**.D2_EVT can be cleared.

Action configuration	Behavior	Clearing status bit
D2LVL.D2_ACFG = 0_B	Monitoring only, no autonomous turn-off, no *FLT_N* signaling	Clear event counter **D2ECNT** by setting **CLEARREG**.D2E_CL = 1_B
D2LVL.D2_ACFG = 1_B	Monitoring; start fault-off sequence; *FLT_N* signaling	defined fault clear method

3.8 Gate driver output

The gate driver output side uses MOSFETs to provide a rail-to-rail output. Therefore, the gate drive voltage follows the supply voltage closely.

Due to the low internal voltage drop, the switching behavior of the IGBT is predominantly governed by the external gate resistor. The gate driver IC offers separate sink and source outputs to adapt the gate resistor for turn-on and turn-off separately without additional bypass components.

The cell value x in the following table is placeholder for high or low and indicates that this pin does not influence the resulting gate driver output state. The arrow (→) in cells indicate the transition initiated by the pin of the logic input and gate driver supply pins resulting in a transition to the gate driver output state as listed.

Table 4 Driver output state including transition behavior

Logic input and gate driver supply					**Gate driver output**	
IN	***RDYC***	***FLT_N***	***VCC1***	***VCC2***	***ON***	***OFF***
Static gate driver output state: on and off						
high	high	high	high	high	high	tri-state
low	high	high	high	high	tri-state	low
Transition to not ready and static not ready state						
x	high → low	high	high	high	→ tri-state	→ fault off
x	low	high	high	high	tri-state	low
Transition to fault and static fault state						
x	high	high → low	high	high	→ tri-state	→ fault off
x	high	low	high	high	tri-state	low
Transition with VCC1 power loss and unsupplied input side						
x	x	x	high → low	high	→ tri-state	→ fault off
x	x	x	low	high	tri-state	low
Transition with VCC2 power loss and unsupplied output side						
x	x	x	x	high → low	→ tri-state	→ fault off
x	x	x	x	low	tri-state	active shut down

3.8.1 Turn-on behavior

The 1ED38x0Mc12M family (X3 Digital) is optimized for hard switching turn-on. A turn-on command switches the *ON* pin internally to *VCC2*.

3.8.2 Turn-off and fault turn-off behavior

The gate driver IC supports different turn-off sequences to adapt to different applications and IGBT currents during normal switching operation and in the case of a fault.

Table 5 Turn-off sequences

Turn-off reason	Turn-off sequence			Remark
	Hard switching	Two-level turn-off	Soft turn-off	
normal off	X	X		adjustable
fault turn-off	X	X	X	adjustable

The gate driver turn-off behavior can be configured in register **DRVCFG**.STD_OFF.

The gate driver fault turn-off behavior can be configured in register **DRVFOFF**.DRV_FOFF.

In some topologies the fault turn-off needs to be delayed for individual switch positions. The fault turn-off delay time $t_{FAULTOFFn}$ is adjustable in the register **F2ODLY**.F2O_DLY.

The gate driver monitors the gate voltage and sets the register bit **FLTEVT**.VOUT_ST to 1_B as long as the voltage at the *ON* pin is above *VEE2* + 2 V.

Once started, the fault turn-off sequence cannot be interrupted by an *IN* = low turn-off signal.

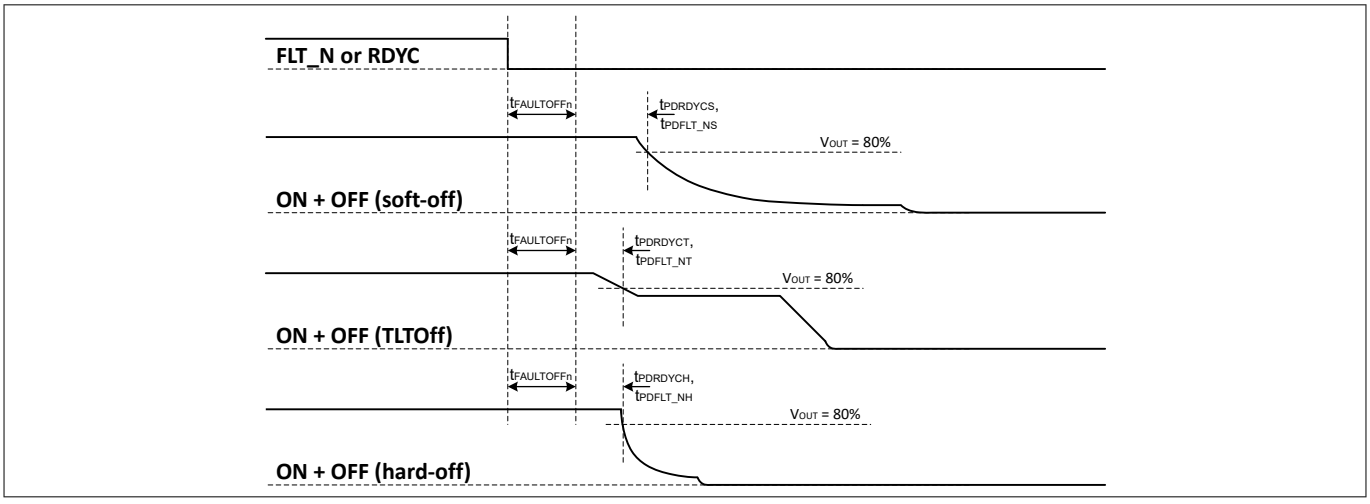

Figure 23 Fault turn-off sequence initiated by *FLT_N* or *RDYC*

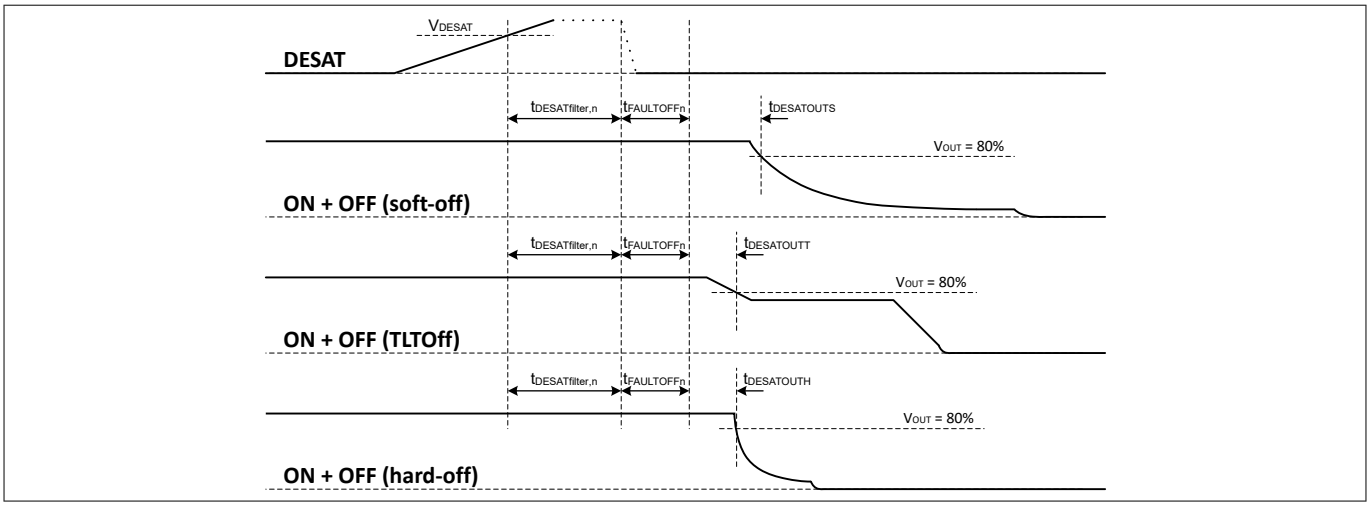

Figure 24 Fault turn-off sequence initiated by DESAT event

3.8.2.1 Hard switching turn-off

Hard switching turn-off supports fast switching applications and applications with emitter-follower booster stages. The switching behavior of the IGBT is controlled by adjusting the external gate resistance between the *OFF* pin and the IGBT gate.

3.8.2.2 Two-level turn-off

The two-level turn-off (TLTOff) is a voltage controlled turn-off function.

Two-level turn-off supports secure IGBT turn-off even under overload conditions with low V_{CE} overshoot. It also operates in applications with emitter-follower booster stages, typical for high power applications with larger d*i*/d*t*. With two-level turn-off the switching behavior of the IGBT is controlled by the plateau voltage and the ramp speed.

The gate driver IC is switching the IGBT gate off by discharging from positive supply to an intermediate voltage level plateau to reduce a collector over current and continued turn-off thereafter. In detail this includes:

1. Discharge gate from *VCC2* voltage level to intermediate voltage level with the controlled voltage ramp A.
2. At the intermediate gate voltage level the IGBT collector current is being limited at overload application conditions.
3. The configured duration of ramp A and intermediate voltage level depends on individual application requirements.
4. Finally the gate voltage is further reduced by the controlled voltage ramp B until the IGBT is completely switched off and the gate voltage reaches *VEE2*.

The gate driver two-level turn-off function can be activated in register**DRVCFG**.STD_OFF. The behavior can be adjusted with four parameters in the registers **TLTOC1** and **TLTOC2**.

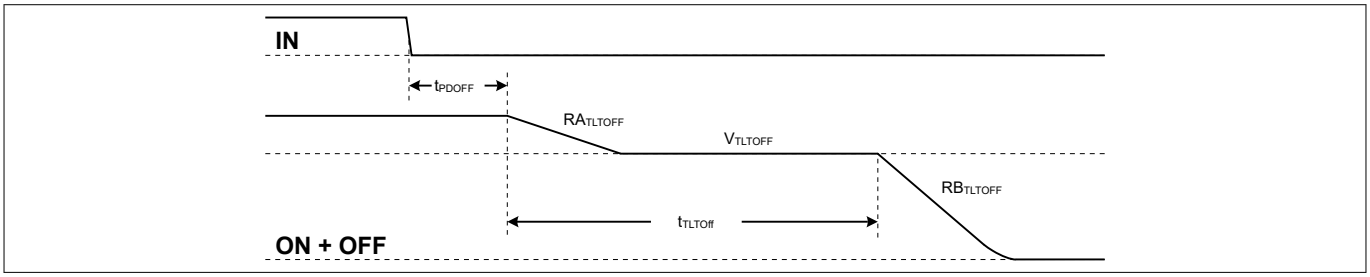

Figure 25 Two-level turn-off timing and ramp-down behavior

In the two-level turn-off mode, the turn-on propagation delay is a function of the plateau time and the gate driver propagation delay without TLTOff function t_{PDon}. This means the gate driver propagation delay will be enlarged by the plateau time for turn-on to ensure a constant on-time of the switch. The two-level turn-off does not change the on-time of an *IN* pulse. The TLTOff voltage will be controlled in a closed loop at the *OFF* output pin of the gate driver IC.

For switch-off initiated by:

- the *IN* signal, the gate driver IC is starting the TLTOff sequence after the propagation delay
- the DESAT function, the gate driver switch-off is delayed by desaturation sense to OFF delay and an optional fault-off delay
- a non-DESAT fault event or a not ready event on output side, the gate driver switch-off occurs immediately or after an optional fault-off delay

After the elapsed plateau time the gate driver IC switches from the plateau voltage down to *VEE2* voltage.

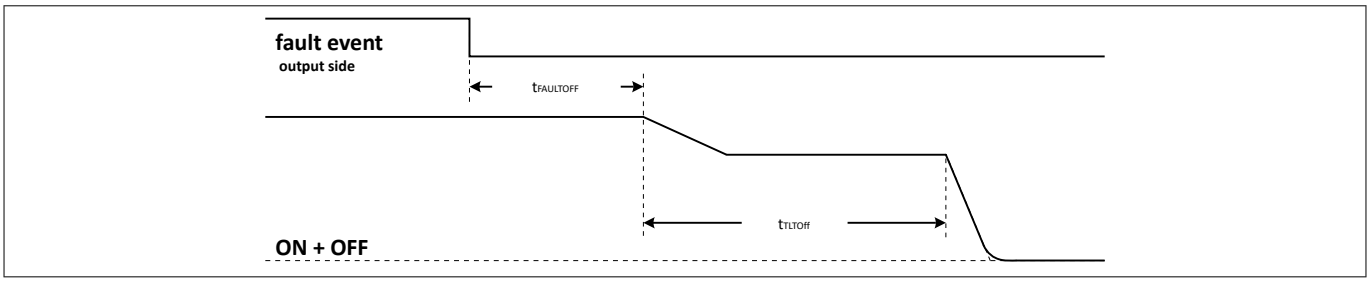

Figure 26 Two-level turn-off after fault event (output side)

For switch-off initiated by:

- *FLT_N* or *RDYC* signal or an internal fault event from input side, the output is switched off after the propagation delay with an optional fault off delay using the defined fault off function

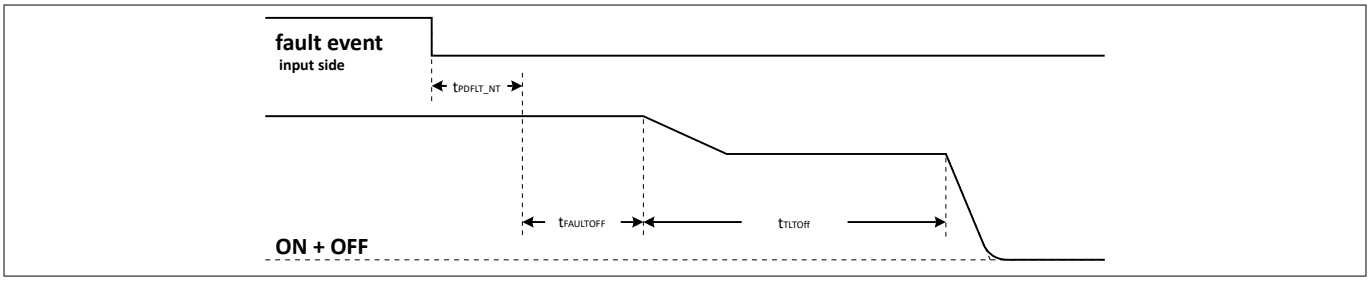

Figure 27 Two-level turn-off after fault event (input side)

3.8.2.2.1 Two-level turn-off behavior at normal operating conditions

Operating the external IGBT at or below nominal current using the two-level turn-off function has almost no influence on turn-off switching losses.

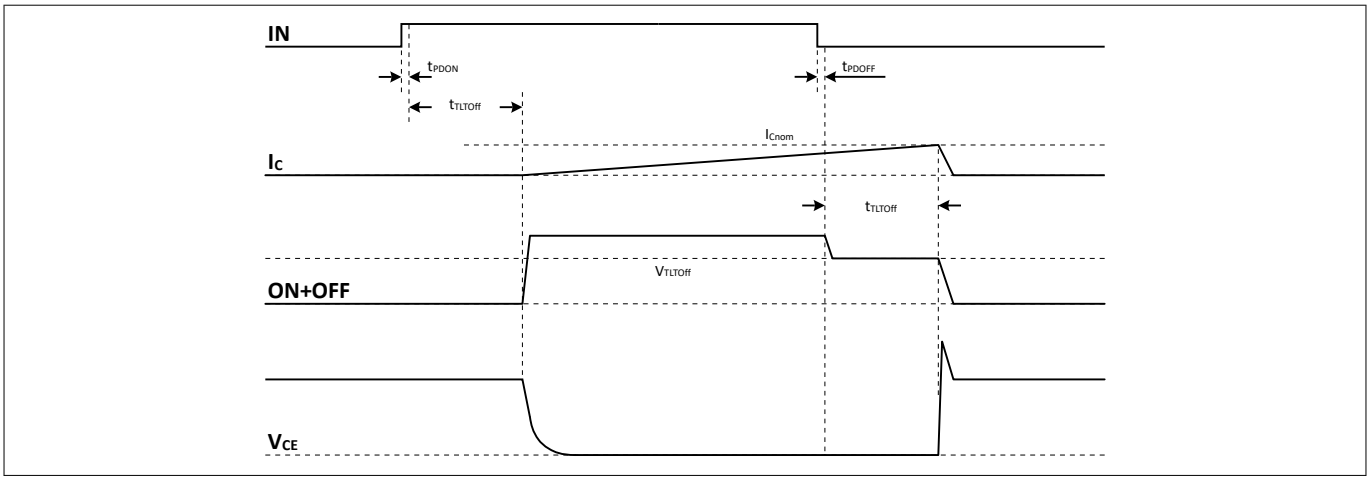

Figure 28 Two-level turn-off behavior at normal operating conditions

3.8.2.2.2 Two-level turn-off behavior at overload condition

The two-level turn-off function introduces an additional second turn-off voltage level at the gate driver IC output. This intermediate turn-off voltage level ensures lower V_{CE} overshoots at turn-off by reducing the gate emitter voltage of the external IGBT at short circuits or overcurrent events.

The lower V_{GE} level is limiting the current capability of an IGBT before turn-off. The lower collector current is reducing the collector emitter voltage overshoot induced by parasitic inductances of the high power path (module, DC-link capacitor) and high dI_C/dt.

The two-level turn-off function is designed to discharge the IGBT gate at the end of the on interval to a gate emitter voltage which forces the IGBT output characteristic into a current limiting mode. The required two-level turn-off timing depends on the used gate resistor, the gate charge, the stray inductance, and the overcurrent at the beginning of the two-level turn-off interval.

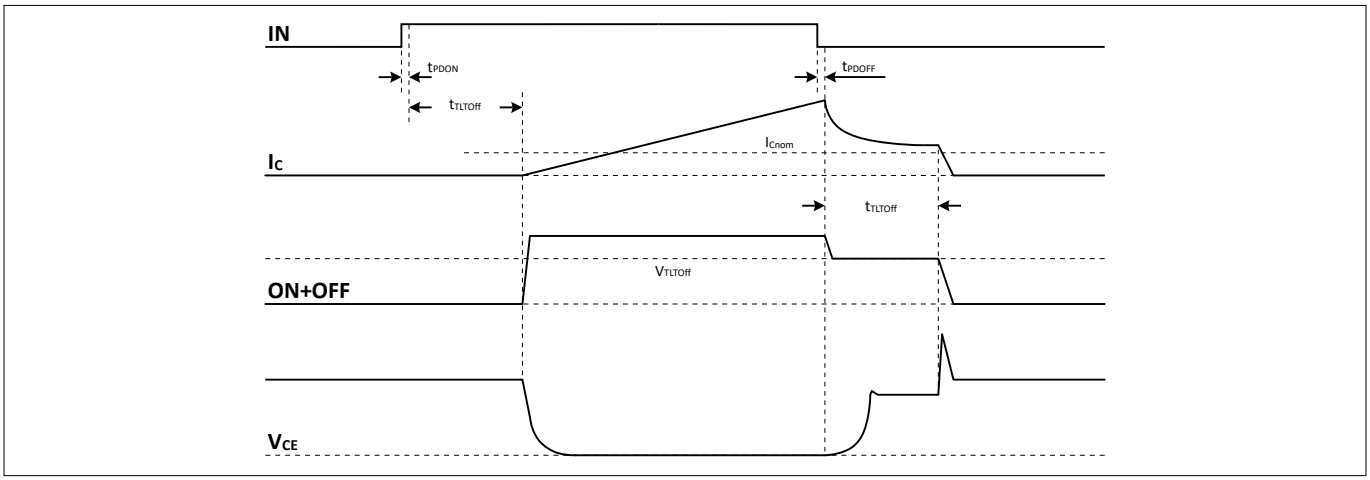

Figure 29 Two-level turn-off behavior at overload condition

3.8.2.2.3 Two-level turn-off short pulse behavior

The two-level turn-off function introduces a longer propagation delay for pulse matching. The short input pulse behavior is therefore different compared to hard switch-off.

Table 6 Two-level turn-off short pulse scenarios

Pulse duration	On pulse	Off pulse
Pulse < input pulse suppression time t_{INMIN}	suppressed	suppressed
Pulse < two level turn off time t_{TLTOFF}	suppressed	processed
Pulse > two level turn off time t_{TLTOFF}	processed	processed

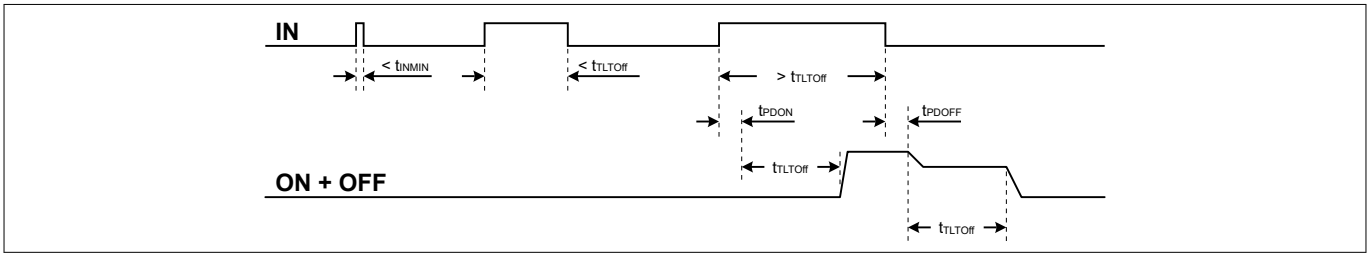

Figure 30 Two-level turn-off behavior on short on-pulse

Turn-on pulses shorter than the TLTOff plateau time but longer than the input pulse suppression time will be suppressed by the two-level turn-off function (in figure: first two turn-on pulses). The output stage stays low and the switch stays off. On pulses longer than the TLTOff plateau time will be processed by the two-level turn-off function (in figure: last turn-on pulse). The output stage will be turned on after the TLTOff time is elapsed. The gate of the switch will be charged.

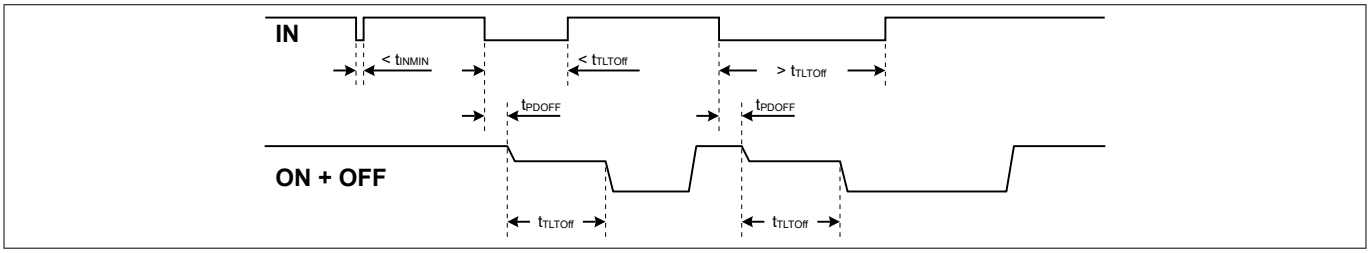

Figure 31 Two-level turn-off behavior on short off-pulse

Turn-off pulses longer than the input pulse suppression time will be processed by the two-level turn-off function (in figure: last two turn-off pulses). The output stage turns off the IGBT with the TLTOff sequence. The driver stays off for the requested off time to respect the off-time pulse matching.

The gate driver output impedance influences the two-level turn-off waveform.

3.8.2.2.4 Two-level turn-off short pulse behavior with slow turn-on ramp speed

The gate driver IC turn-on ramp speed is limited and influences the two-level turn-off short turn-on pulse behavior. The gate driver IC behaves differently depending on the gate voltage reached at the time of turn-off:

- TLTOff plateau voltage V_{TLTOFF} not reached: Skipping TLTOff duration and immediately turn-off using ramp B
- V_{TLTOFF} reached for a shorter time than the CLAMP and pin status monitoring time $t_{CLAMPfilter}$: Skipping TLTOff duration and immediately turn-off using ramp B
- V_{TLTOFF} reached and $t_{CLAMPfilter}$ (**CLCFG**.CLFILT_T) elapsed: Normal two-level turn-off using ramp A, plateau and ramp B. Input to output pulse matching is only valid for this case.

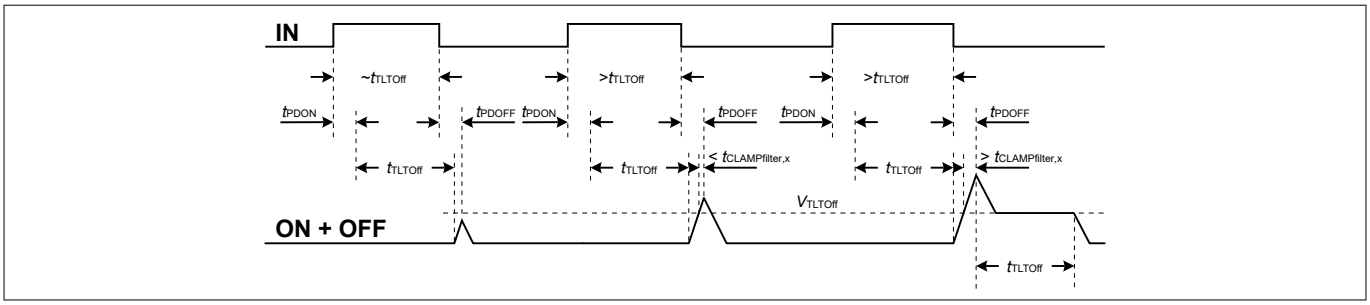

Figure 32 Two-level turn-off short on pulse and slow gate voltage rise

Short turn-off pulses do not change the general behavior. A slow turn-off ramp will be interrupted by the next turn-on request.

3.8.2.3 Soft turn-off

The soft turn-off function protects the IGBT against collector-emitter overvoltage during turn off in an overcurrent condition. It turns-off the IGBT with a reduced gate current to reduce the d*i*/d*t* induced overvoltage..

The IGBT gate is connected via *OFF* to an internal current sink circuit. The discharge current is typically lower than the hard switch-off current used for normal operation. Since soft turn-off is a single event after a failure, the gate driver IC can handle the additional power dissipation internally.

The soft turn-off function is implemented as a current source which can be adjusted with a 4 bit value in the register **CSSOFCFG**.

The adjustable range depends on the current strength of the gate driver IC:

- 1ED3830M: 15 mA - 233 mA
- 1ED3860M: 29 mA - 466 mA
- 1ED3890M: 44 mA - 699 mA

3.8.2.4 Switch-off timeout until forced switch-off

The gate driver IC is equipped with a switch-off timeout monitoring feature. In case the pin monitoring comparator has not registered an off-state within the timeout time this feature activates a forced switch-off.

In addition, the gate driver IC:

- sets the switch-off timeout event bit, and
- latches the fault and activates the *FLT_N* output, depending on the switch-off timeout function bit in register **SOTOUT**

The monitoring feature secures the IGBT switch-off in case of a connection failure between the *OFF* output and the IGBT gate or a faulty gate resistor. In a forced switch-off all available output switch-off paths (*OFF* and *CLAMP*) will be used to hard switch-off the IGBT after such an event.

The switch-off timeout is tailored to the different turn-off scenarios.

In case a very short switch-off timeout time is chosen, the *CLAMP* will activate at a higher gate voltage which results in a hard turn-off. Even with the *CLAMP* output disabled, the gate driver IC will activate the hard switch-off at the *OFF* pin.

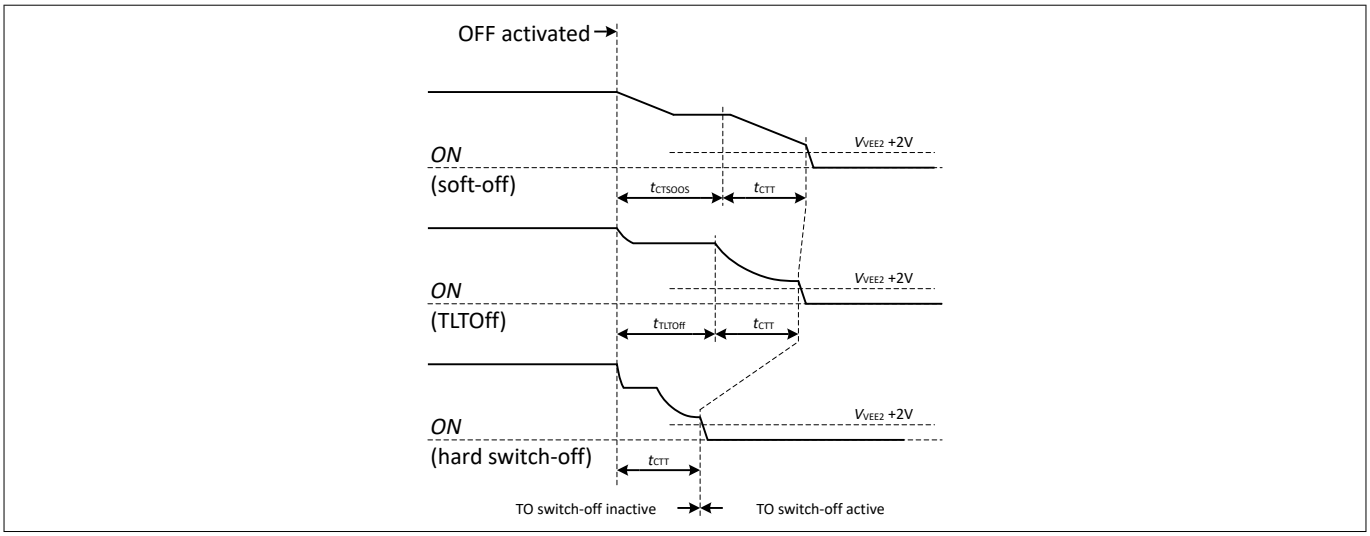

Figure 33 Switch-off timeout behavior

The timing diagram shows the switch-off timeout behavior from the moment of *OFF* output activation until the timeout has elapsed and the *CLAMP* output is activated.

3.8.3 Active shut-down

The active shut-down feature ensures a safe IGBT off-state, if the output chip is not supplied. It protects the IGBT against a floating gate. The IGBT gate is always clamped via *OFF* to *VEE2*.

3.8.4 Active Miller clamp

The 1ED38x0Mc12M family (X3 Digital) is equipped with a configurable active Miller clamp function to protect the IGBT from parasitic turn-on in fast switching applications.

After a turn-off command the gate driver IC follows the implemented sequence:

1. Discharge of the IGBT gate while monitoring the voltage level at the *ON* pin
2. Detection of a voltage at the *ON* pin less than a level of *VEE2* + 2.0 V
3. Filtering of the detection to avoid false CLAMP activation and not to influence regular turn-off behavior
4. Activating clamp function to keep IGBT gate at *VEE2* level

3.8.4.1 CLAMP output types

The CLAMP output stage offers two operating modes:

- direct gate clamping with an open drain output for medium clamping current
- pre-driver output, to clamp IGBT gate with external transistor for high clamping current

Direct gate clamping

Direct gate clamping with an open drain output is tailored for direct clamping of IGBT gate to *VEE2*. The output current capability is typically 2 A. Useful IGBT current rating for direct gate clamping is a collector current of typically smaller than 100 A. Connect the *CLAMP* pin directly to the gate with low inductive tracks.

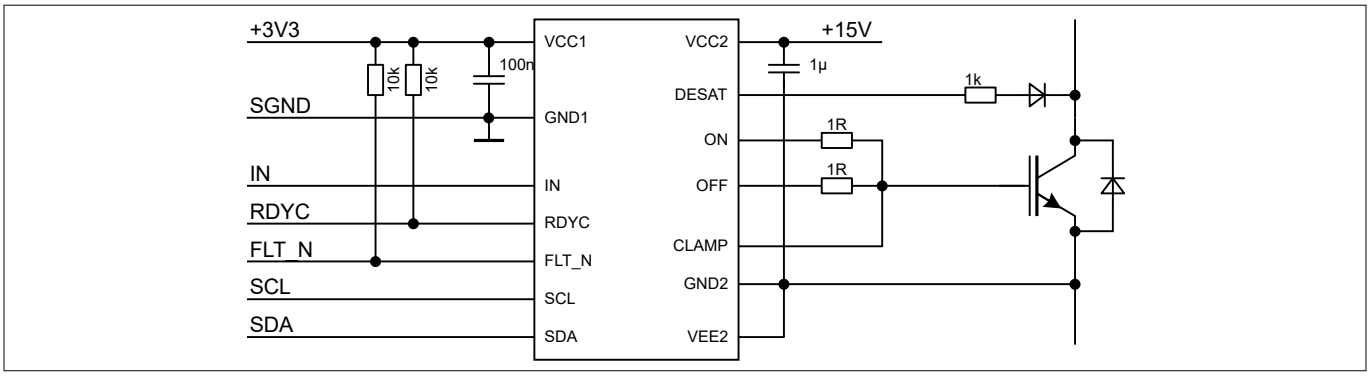

Figure 34 Application example with unipolar supply

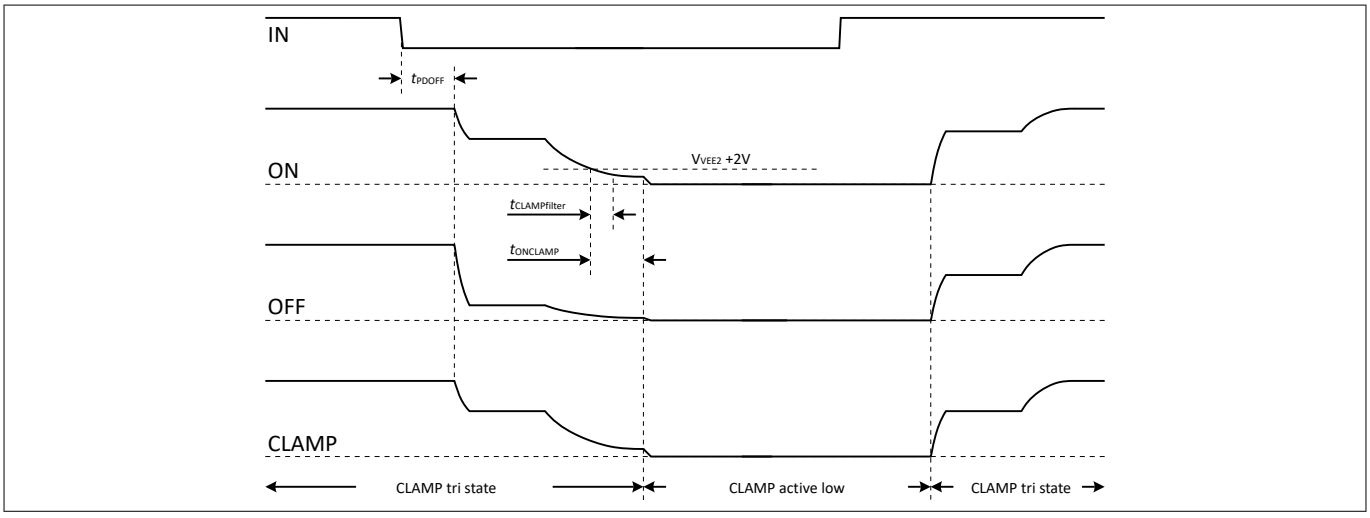

Figure 35 Direct clamp output behavior

Pre-driver output

Track inductance and clamp output resistance reduces the clamping capability for large IGBTs. In this case, select the pre-driver output configuration with an external MOSFET.

The external small signal n-channel MOSFET transistor in combination with the pre-driver output enables clamping of high gate currents. Connect the MOSFET between the *CLAMP* output, *VEE2* pin, and IGBT gate. Due to the pre-driver configuration the clamp current is only limited by the external clamp MOSFET transistor. Depending on the external MOSFET a Miller current clamping up to 20 A can be reached. The clamping MOSFET has to be placed close to the IGBT gate to minimize track resistance and inductance.

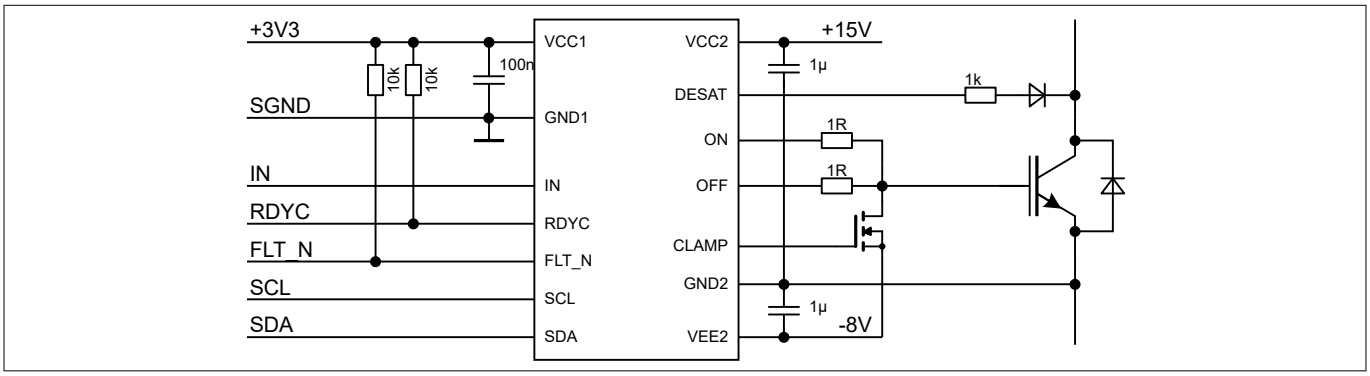

Figure 36 Application example with bipolar supply and CLAMP pre-driver output

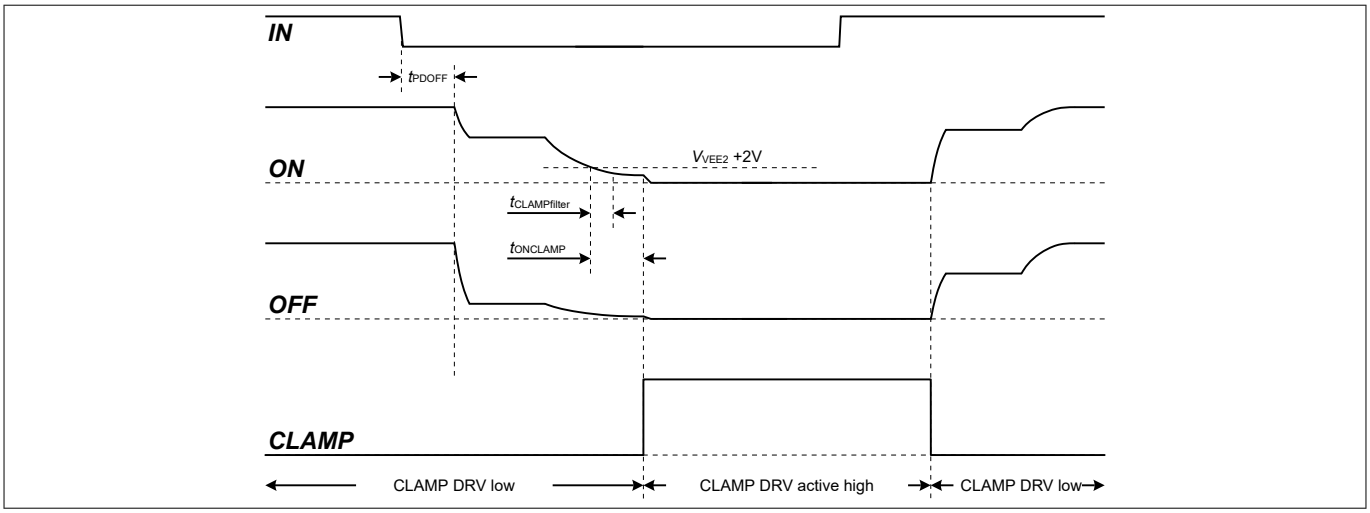

Figure 37 Clamp pre-driver output behavior

3.9 Short circuit clamping

The integrated short circuit clamping diode limits the IGBT gate over voltage during a short circuit. The over voltage is typically triggered by the capacitive feedback of the Miller capacitance.

The internal diodes from *ON* and *CLAMP* to *VCC2* limit the gate driver voltage to a value slightly higher than the supply voltage. These diode paths are rated for a maximum current of 0.75 A and the duration of 6 µs. Add an external Schottky diode if higher currents are expected or a tighter clamping is desired. Also use an external diode if the active Miller clamping circuit uses the pre-driver output configuration.

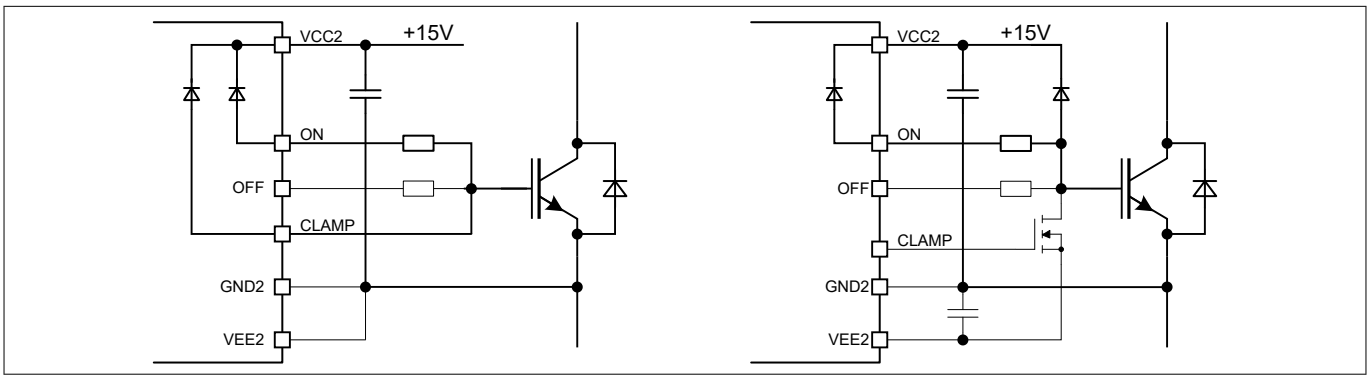

Figure 38 Short circuit clamping circuitry

4 Register description

Always use the specified reset value for reserved fields when writing to those registers.

Table 7 Register overview

Register short name	Register long name	Offset address
Address registers		
I2CADD	I2C address of gate driver	000_H
I2CGADD	I2C group address of gate driver	001_H
I2CCFGOK	I2C address configuration access lock	002_H
Configuration registers		
PSUPR	Input pin filter times for *IN*, *RDYC*, *FLT_N*, and I2C	003_H
FCLR	*FLT_N* clear behavior by *RDYC* or timer	004_H
RECOVER	Input and output configuration recovery modes	005_H
UVTLVL	UVLO threshold level for *VCC2* and *VEE2*	006_H
UVSVCC2C	*VCC2* soft UVLO enable and threshold level	007_H
UVSVEE2C	*VEE2* soft UVLO enable and threshold level	008_H
ADCCFG	ADC enable and compare polarity	009_H
VEXTCFG	*CLAMP* pin voltage compare limit (ADC)	$00A_H$
OTWCFG	Over-temperature warning level and action	$00B_H$
D1LVL	DESAT disable and DESAT1 threshold voltage level	$00C_H$
D1FILT	DESAT1 filter time and type	$00D_H$
D2LVL	DESAT2 enable during TLTOff, influence on fault-off, and threshold level	$00E_H$
D2FILT	DESAT2 filter time and type	$00F_H$
D2CNTLIM	DESAT2 event counter limit to trigger **FLTEVT**.D2_EVT	010_H
D2CNTDEC	DESAT2 event count down	011_H
DLEBT	DESAT leading edge blanking time	012_H
F2ODLY	Delay from fault event to gate driver off	013_H
DTECOR	DESAT temperature compensation	014_H
DRVFOFF	Type of fault switch-off	015_H
DRVCFG	Type of normal switch-off and TLTOff gate charge range	016_H
TLTOC1	TLTOff level and ramp A	017_H
TLTOC2	TLTOff duration and ramp B	018_H
CSSOFCFG	Soft-off current	019_H
CLCFG	*CLAMP* and pin monitoring filter time and type, *CLAMP* output types and disable	$01A_H$
SOTOUT	Switch-off timeout time and fault signaling	$01B_H$
CFGOK	Register configuration access lock	$01C_H$
CLEARREG	Clear event counter registers for DESAT2, *VCC1* UVLO, *VCC2* UVLO, event flags, and soft-reset	$01D_H$

Register short name	Register long name	Offset address
res	reserved registers are read as 0_H	$01E_H$-025_H
Status registers		
RDYSTAT	Status of input side, output side, and gate driver IC	026_H
res	reserved registers are read as 0_H	027_H
SECUVEVT	Output side UVLO events causing a not ready state (sticky bits)	028_H
GFLTEVT	Indicator of active fault handling	029_H
FLTEVT	Fault status and events of input side and output side	$02A_H$
PINSTAT	Status of pins	$02B_H$
COMERRST	Status of input to output communication	$02C_H$
CHIPSTAT	Logic status of gate driver IC	$02D_H$
EVTSTICK	Event indicator (sticky bits)	$02E_H$
UV1FCNT	Counter of unfiltered *VCC1* UVLO events	$02F_H$
UV2FCNT	Counter of unfiltered *VCC2* UVLO events	030_H
D2ECNT	Counter of DESAT2 events	031_H
ADCMVDIF	Filtered ADC calculation result of *VCC2-GND2*	032_H
ADCMGND2	Filtered ADC result of *GND2-VEE2*	033_H
ADCMVCC2	Filtered ADC result of *VCC2-VEE2*	034_H
ADCMTEMP	Filtered ADC result of gate driver temperature	035_H
ADCMVEXT	Filtered ADC result of *CLAMP-VEE2*	036_H

4.1 Configuration registers

4.1.1 I2CADD: I2C address of gate driver

The gate drivers of the 1ED38x0 family have two configurable 7 bit addresses:

- device address **I2CADD**, e.g. for dedicated read out or configuration
- group address **I2CGADD** to configure all gate drivers in the same group within one write cycle

Both addresses have to be set at start up. Configured addresses have to differ from the initial LSB aligned I2C device address $0D_H$.

I2CADD Address: 000_H

I2C address of gate driver Reset Value: $0D_H$

7	6	5	4	3	2	1	0
res	**I2C_ADD**						
none	rw						

Field	Bits	Type	Description
res	7	none	Reset: 0_B
I2C_ADD	6:0	rw	**LSB aligned 7 bit I2C address of gate driver** accessible only if **I2CCFGOK** = 0_B. Reset: $000\ 1101_B$

4.1.2 I2CGADD: I2C group address of gate driver

The gate drivers of the 1ED38x0 family have two configurable 7 bit addresses:

- device address **I2CADD** , e.g. for dedicated read out or configuration
- group address **I2CGADD** to configure all gate drivers in the same group within one write cycle

Both addresses have to be set at start up. Configured addresses have to differ from the initial LSB aligned I2C device address $0D_H$.

I2CGADD Address: 001_H

I2C group address of gate driver Reset Value: $0D_H$

7	6	5	4	3	2	1	0
res	**I2C_GADD**						
none	rw						

Field	Bits	Type	Description
res	7	none	Reset: 0_B
I2C_GADD	6:0	rw	**LSB aligned 7 bit I2C group address of gate driver** accessible only if **I2CCFGOK** = 0_B. Reset: $000\ 1101_B$

4.1.3 I2CCFGOK: I2C address configuration access

The gate driver is configured to start up with the common default address in OFF state.

The register **I2CCFGOK** is used to block the write access to the address registers **I2CADD** and **I2CGADD** after configuration.

I2CCFGOK Address: 002_H

I2C address configuration access lock Reset Value: 00_H

7	6	5	4	3	2	1	0
res							**I2CCFGOK**
none							rw

Field	Bits	Type	Description
res	7:1	none	Reset: 0000000_B
I2CCFGOK	0	rw	**Locking flag to I2CADD / I2CGADD .** 1_D Configured, write access to **I2CADD** / **I2CGADD** blocked 0_D Not configured, full access to **I2CADD** / **I2CGADD** enabled Reset: 0_B

4.1.4 PSUPR: Input pin filter times for *IN*, *RDYC*, *FLT_N*, and I2C

The register **PSUPR** allows the adjustment of input pin filter times $t_{xMIN,n}$ for *IN*, *RDYC*, *FLT_N*, *SDA* and *SCL* with either a short or a long filter time. The selected filter time influences the propagation delay.

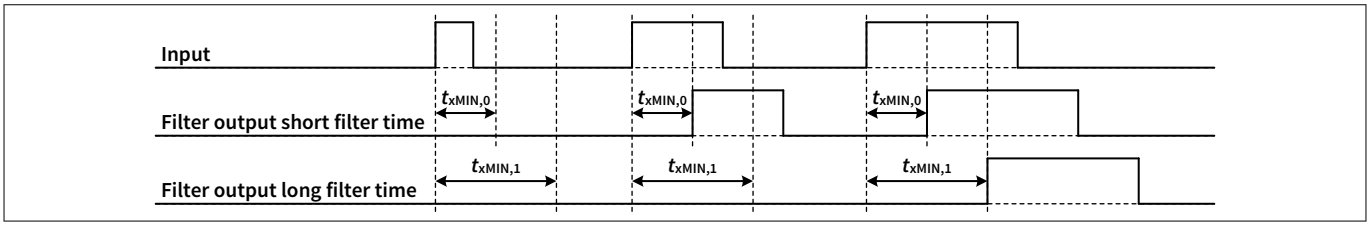

Figure 39 Adjustable filter time for *IN*, *RDYC*/*FLT_N* and I2C

PSUPR Address: 003_H

Input pin filter times for *IN*, *RDYC*, *FLT_N*, and I2C Reset Value: 00_H

7	6	5	4	3	2	1	0
res							**IN_SUPR**
none							rw

Field	Bits	Type	Description
res	7:1	none	Reset: 0000000_B
IN_SUPR	0	rw	**Input filter times** *IN*, *RDYC*, and *FLT_N*: 1_D 200 ns 0_D 100 ns I2C pins *SDA* and *SCL*: 1_D 100 ns 0_D 50 ns Reset: 0_B

4.1.5 FCLR: *FLT_N* clear behavior by RDYC or timer

Two methods are available for fault clearing, either self clear timer or clearing by RDYC to low cycle.

The register parameter **FCLR**.FCLR_CFG configures the fault clear method:

- 1_B activates the self clear timer method
- 0_B activates the *RDYC* to low cycle method

Self clear timer method

The register parameter **FCLR**.FSCLR_T configures the self clear time:

- 0_B to 400 µs
- 1_B to 1600 µs.

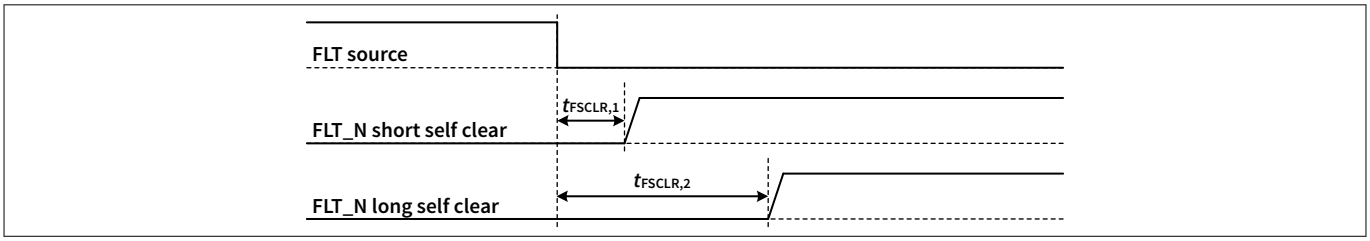

Figure 40 Self clear timer method: behavior of self clear time setting

RDYC to low cycle method

Setting *RDYC* to low for longer than the fault clear time t_{CLRMIN} will reset the stored fault signal at pin *FLT_N* with the rising edge of *RDYC*.

The typical fault clear time t_{CLRMIN} is 1.0 µs.

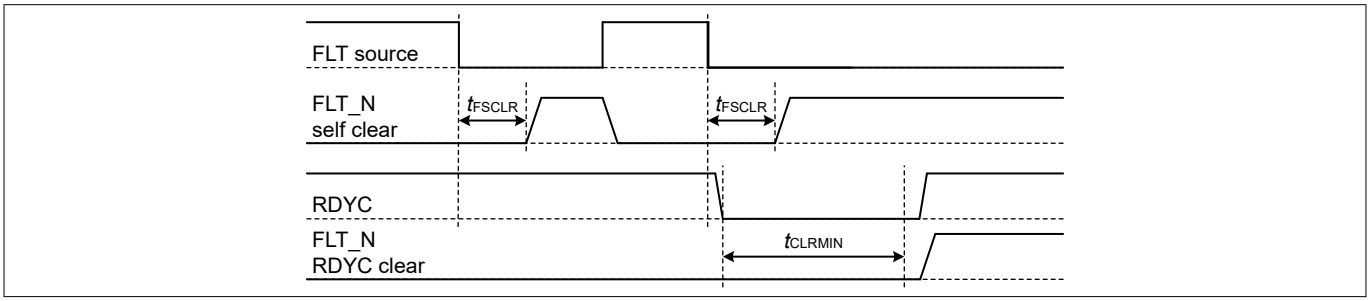

Figure 41 *FLT_N* clear method by RDYC to low cycle or self clear timer

FCLR Address: 004_H

FLT_N clear behavior by *RDYC* or timer Reset Value: 00_H

7	6	5	4	3	2	1	0
res						**FSCLR_T**	**FCLR_CFG**
none						rw	rw

Field	Bits	Type	Description
res	7:2	none	Reset: 000000_B
FSCLR_T	1	rw	**Self clear time** 1_D 1600 µs 0_D 400 µs Reset: 0_B

(table continues...)

(continued)

Field	Bits	Type	Description
FCLR_CFG	0	rw	**Clear method** 1_D Using self clear timer 0_D By RDYC pin Reset: 0_B

4.1.6 RECOVER: Input and output configuration recovery modes

The gate driver IC is equipped with an advanced configuration restore function for the input and output side.

Automatic configuration restore from input side

The function is configured in register bit **RECOVER**.RESTORE. The bit determines the actions taken after an output side configuration reset, caused for example by a preceding UVLO event. The output side supply voltage needs to be above UVLO thresholds for the actions to take place.

- 0_B = restore not active, the gate driver IC will
  - perform a soft-reset,
  - clear parameter configuration bit **CFGOK** .USER_OK to 0_B, and
  - stay in parameter configuration state and wait for the user to re-configure the settings
- 1_B = restore active, the gate driver IC will
  - restore the output side and
  - release *RDYC* and enter normal operation state

Automatic configuration recovery from output side

The function is configured in register **RECOVER**.RECOVER. The bit determines the actions taken after an input side configuration reset caused for example by a preceding UVLO event.

- 0_B recover not active, gate driver IC will
  - perform a soft-reset,
  - clear parameter configuration bit **CFGOK** .USER_OK and **I2CCFGOK** .I2CCFGOK to 0_B, and
  - returns to OFF state
- 1_B recover active, gate driver IC will
  - recover the configuration from the output side,
  - release *RDYC*, and
  - enter normal operation state

RECOVER Address: 005_H

Input and output configuration recovery modes Reset Value: 00_H

7	6	5	4	3	2	1	0
res						**RESTORE**	**RECOVER**
none						rw	rw

Field	Bits	Type	Description
res	7:2	none	Reset: 000000_B

(table continues...)

(continued)

Field	Bits	Type	Description
RESTORE	1	rw	**Output restore on power failure** 1_D Restore from input side 0_D No restore from input side, soft reset Reset: 0_B
RECOVER	0	rw	**Input recover on power failure** 1_D Recover from output side 0_D All registers return to reset values Reset: 0_B

4.1.7 UVTLVL: UVLO threshold level for *VCC2* and *VEE2*

The register **UVTLVL** allows the configuration of:

- normal *VCC2* supply UVLO
- normal *VEE2* supply UVLO

Normal *VCC2* UVLO configuration

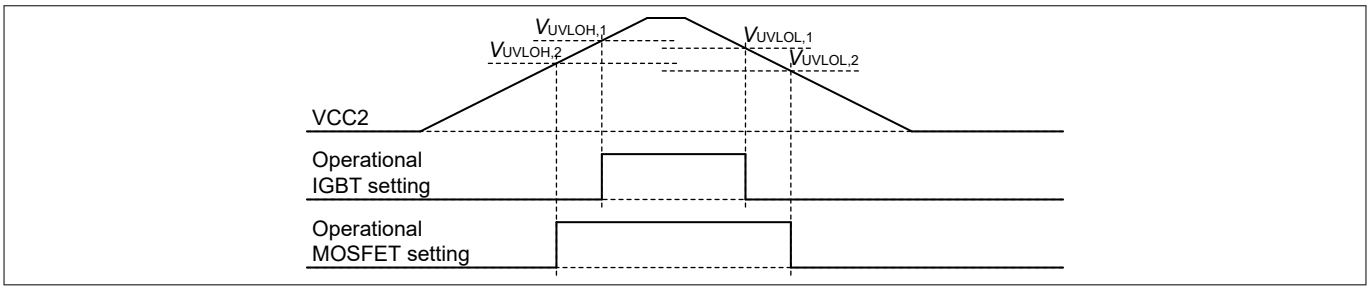

Figure 42 *VCC2* UVLO configuration for IGBT or MOSFET levels

Normal *VCC2* supply UVLO uses the filtered *VCC2* supply voltage, comparable to state of the art UVLO circuits. The normal UVLO ensures proper operating conditions for the gate driver IC itself as well as for many IGBT driving applications. There are two UVLO2 levels configurable in the register field **UVTLVL**.UVVCC2TL:

- Dedicated for MOSFET application with an UVLO lower than $V_{UVLO2H,1,max}$ = 10.0 V
- Dedicated for IGBT application with an UVLO higher than $V_{UVLO2H,0,max}$ = 12.6 V

Normal *VEE2* UVLO configuration

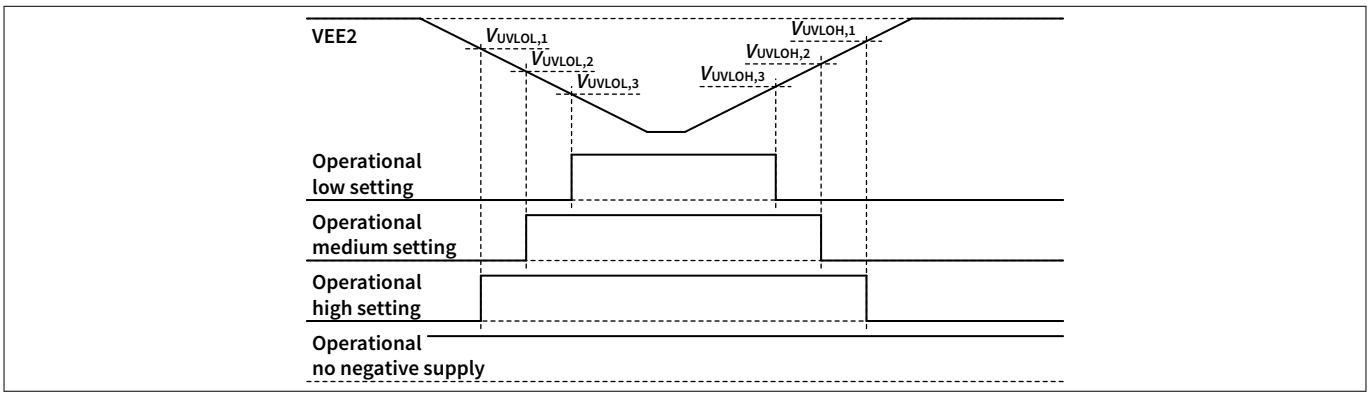

Figure 43 *VEE2* UVLO configuration for negative voltage supply levels

Normal *VEE2* supply UVLO uses the filtered VEE2 supply voltage, comparable to state of the art UVLO circuits. The register **UVTLVL**.UVVEE2TL allows the following settings:

- No negative supply UVLO monitoring
- High setting: Optimized for negative supply of -5 V, with an UVLO on level of typically -3.5 V
- Medium setting: Optimized for negative supply of -8 V, with an UVLO on level of typically -6 V
- Low setting: Optimized for negative supply of -15 V, with an UVLO on level of typically -12.0 V

UVTLVL Address: 006_H

UVLO threshold level for *VCC2* and *VEE2* Reset Value: 00_H

7	6	5	4	3	2	1	0
res					**UVVCC2TL**	**UVVEE2TL**	
none					rw	rw	

Field	Bits	Type	Description
res	7:3	none	Reset: 00000_B
UVVCC2TL	2	rw	**VCC2 UVLO threshold level** 1_D Voltage threshold levels for normal level MOSFET 0_D Voltage threshold levels for IGBT Reset: 0_B
UVVEE2TL	1:0	rw	**VEE2 UVLO enable and threshold level** 3_D Low, for -15 V negative supply 2_D Medium, for -8 V negative supply 1_D High, for -5 V negative supply 0_D no negative supply Reset: 00_B

4.1.8 UVSVCC2C: *VCC2* soft UVLO enable and threshold level

The *VCC2* supply soft UVLO uses the measured *VCC2* supply voltage from ADC. The measured value is compared against the soft UVLO levels (**UVSVCC2C**.UVSVCC2L) and the result is stored in the event register **SECUVEVT** .UVSVCC2. The ADC measurement is a strong filtered UVLO where fast changes and spikes are ignored. The function can be configured e.g. to protect the IGBT from low gate voltages during longer time of operation or tune the system behavior in conjunction with power supply.

There are two register parameters which influence the soft *VCC2* UVLO set up (besides *VCC2* ADC measurement configurations):

- **UVSVCC2C**.UVSVCC2L: Soft UVLO level is adjustable between 9.5 V and 17.0 V
- **UVSVCC2C**.UVSVCC2E: Enable soft VCC2 UVLO function

The soft *VCC2* UVLO event can influence the *RDYC* pin, depending on setting. If soft UVLO is enabled, but ADC measurement is not enabled (**ADCCFG** .VINT_EN = 0_B), a soft UVLO event will be signaled due to ADC output value of 00_H.

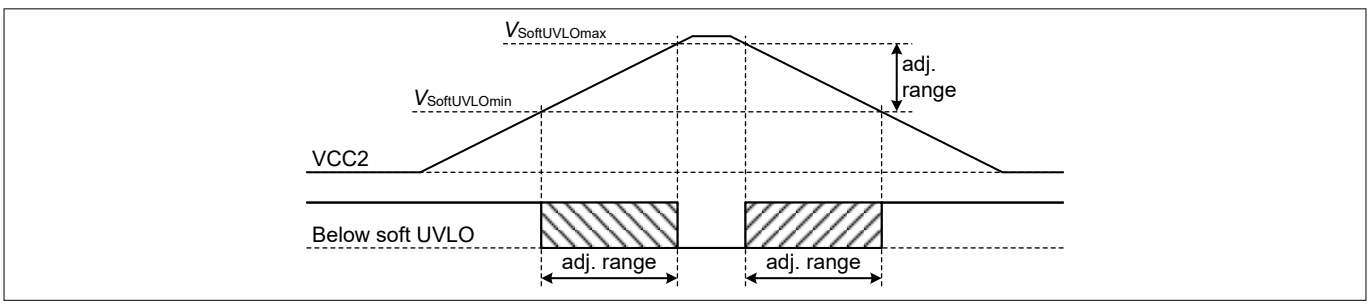

Figure 44 *VCC2* soft UVLO threshold level

UVSVCC2C Address: 007_H

VCC2 soft UVLO enable and threshold level Reset Value: 00_H

7	6	5	4	3	2	1	0
res			**UVSVCC2E**	**UVSVCC2L**			
none			rw	rw			

Field	Bits	Type	Description
res	7:5	none	Reset: 000_B
UVSVCC2E	4	rw	**VCC2 soft UVLO enable** 1_D Enable 0_D Disable Reset: 0_B
UVSVCC2L	3:0	rw	**VCC2 soft UVLO threshold level** 15_D 17 V 14_D 16.5 V ... steps of 0.5 V 0_D 9.5 V Reset: 0000_B

4.1.9 UVSVEE2C: *VEE2* soft UVLO enable and threshold level

The *VEE2* supply soft UVLO uses the measured *VEE2* supply voltage from ADC. The measured value is compared against the soft UVLO levels (**UVSVEE2C**.UVSVEE2L) and the result is stored in the event register **SECUVEVT** .UVSVEE2. The ADC measurement is a strong filtered UVLO where fast changes and spikes are ignored. The function can be configured e.g. to protect the IGBT from insufficient negative gate voltages during longer time of operation or tune the system behavior in conjunction with power supply.

There are two register parameters which influence the soft *VEE2* UVLO set up (besides *VEE2* ADC measurement configurations):

- **UVSVEE2C**.UVSVEE2L: Soft UVLO level is adjustable between -2.0 V and -17.0 V
- **UVSVEE2C**.UVSVEE2E: Enable soft *VEE2* UVLO function

The soft *VEE2* UVLO event can influence the *RDYC* pin, depending on setting. If soft UVLO is enabled, but ADC measurement is not enabled (**ADCCFG** .VINT_EN = 0_B), a soft UVLO event will be signaled due to ADC output value of 00_H.

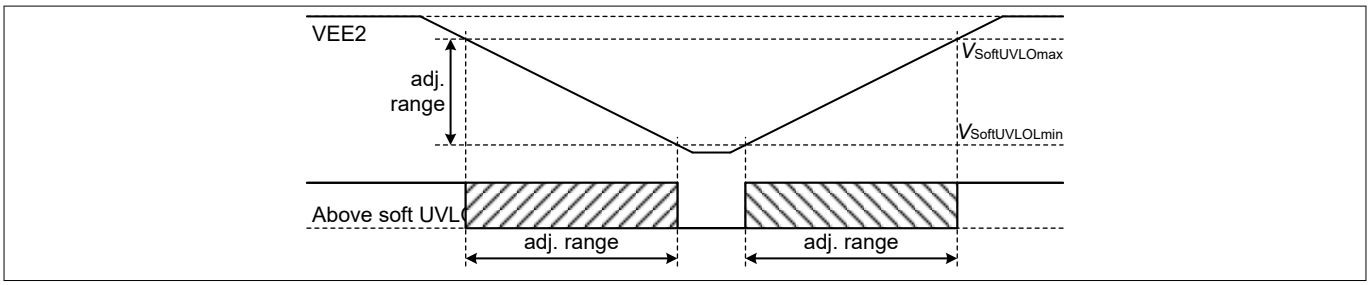

Figure 45 *VEE2* soft UVLO threshold level

UVSVEE2C Address: 008_H

VEE2 soft UVLO enable and threshold level Reset Value: 00_H

7	6	5	4	3	2	1	0
res			UVSVEE2E	UVSVEE2L			
none			rw	rw			

Field	Bits	Type	Description
res	7:5	none	Reset: 000_B
UVSVEE2E	4	rw	**VEE2 soft UVLO enable** 1_D Enable 0_D Disable Reset: 0_B
UVSVEE2L	3:0	rw	**VEE2 soft UVLO threshold level** 15_D -17.0 V ... steps of 1 V 0_D -2.0 V Reset: 0000_B

4.1.10 ADCCFG: ADC enable and compare polarity

The ADC configuration register is used to configure measurement channels and external voltage compare behavior. Measurement of internal junction temperature is always active.

- Register bit **ADCCFG**.VINT_EN: Enable internal voltage measurements *VCC2* to *GND2*, *VCC2* to *VEE2*, and *GND2* to *VEE2*
- Register bit **ADCCFG**.VEXT_EN: Enable external sensor voltage measurement *CLAMP* pin to *VEE2*
- Register bit **ADCCFG**.VEXTLPOL: Compare polarity for event indicator
- Register bit **ADCCFG**.VEXTL_EN: Enable fault trigger on external sensor voltage compare

The external voltage compare will set an event flag each time the external voltage measurement passes an adjustable threshold (**VEXTCFG** .VEXT_LIM) in a configurable direction (**ADCCFG**.VEXTLPOL). This compare result event can also be configured to trigger a fault.

- **ADCCFG**.VEXT_EN: measurement and compare enable bit
  - .VEXT_EN = 1_B: ADC measurement of *CLAMP* pin voltage active. Disable the Miller clamp function to prevent impact on measurement (**CLCFG** .CL_DIS = 1_B)
  - .VEXT_EN = 0_B: ADC measurement of *CLAMP* pin voltage inactive
- **ADCCFG**.VEXTLPOL =: Polarity bit for voltage compare to trigger event
  - .VEXTLPOL = 1_B: set **FLTEVT** .VEXTFLT = 1_B on **ADCMVEXT** .VEXTVEE2 > **VEXTCFG** .VEXT_LIM
  - .VEXTLPOL = 0_B: set **FLTEVT** .VEXTFLT = 1_B on **ADCMVEXT** .VEXTVEE2 < **VEXTCFG** .VEXT_LIM
- **ADCCFG**.VEXTL_EN: trigger fault from event bit
  - .VEXTL_EN = 1_B: activate fault on **FLTEVT** .VEXTFLT = 1_B
  - .VEXTL_EN = 0_B: do not trigger fault on **FLTEVT** .VEXTFLT = 1_B

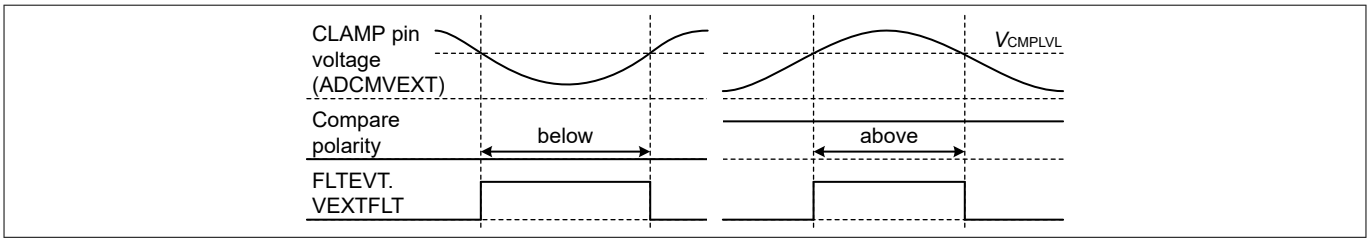

Figure 46 *CLAMP* pin voltage compare polarity

ADCCFG Address: 009_H

ADC enable and compare polarity Reset Value: 03_H

7	6	5	4	3	2	1	0
res		**VEXTL_EN**	**VEXTLPOL**	**VEXT_EN**	**VINT_EN**	**res**	
none		rw	rw	rw	rw	none	

Field	Bits	Type	Description
res	7:6	none	Reset: 00_B
VEXTL_EN	5	rw	**Enable *CLAMP* pin voltage limit compare to trigger fault** 1_D Enable 0_D Disable Reset: 0_B
VEXTLPOL	4	rw	**Compare polarity to trigger FLTEVT .VEXTFLT event** 1_D Trigger on **ADCMVEXT** > **VEXTCFG** 0_D Trigger on **ADCMVEXT** < **VEXTCFG** Reset: 0_B
VEXT_EN	3	rw	**Enable *CLAMP* pin voltage measurement and compare** 1_D Enable 0_D Disable Reset: 0_B
VINT_EN	2	rw	**Enable supply voltage measurements (*VCC2*, *VEE2*, *GND2*)** 1_D Enable 0_D Disable Reset: 0_B
res	1:0	none	Reset: 11_B

4.1.11 VEXTCFG: *CLAMP* pin voltage compare limit

The external voltage compare will set an event flag (**FLTEVT** .VEXTFLT) each time the external voltage measurement (**ADCMVEXT**) passes this adjustable threshold (**VEXTCFG**.VEXT_LIM) in a configurable direction (**ADCCFG** .VEXTLPOL). This compare result event can also be configured to trigger a fault **ADCCFG** .VEXTL_EN).

- **VEXTCFG**.VEXT_LIM: 8 bit threshold value for external voltages compare

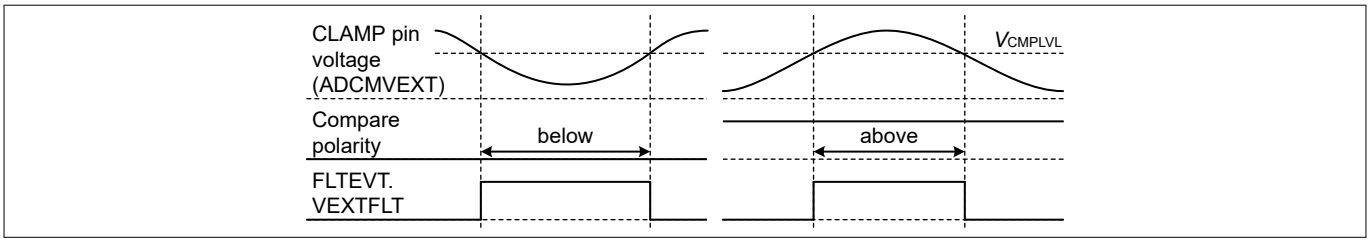

Figure 47 *CLAMP* pin voltage compare level V_{CMPLVL}

VEXTCFG Address: $00A_H$

CLAMP pin voltage compare limit (ADC) Reset Value: 00_H

7	6	5	4	3	2	1	0
VEXT_LIM							
rw							

Field	Bits	Type	Description
VEXT_LIM	7:0	rw	**8 bit voltage compare limit** Reset: 00_H

4.1.12 OTWCFG: Over-temperature warning level and action

In contrast to the non-adjustable gate driver over-temperature protection, the adjustable over-temperature warning level is used to signal an application specific non-proper operation condition, which may influence life time.

The measured temperature is compared to the over-temperature warning level **OTWCFG**.OTW_LVL. If temperature has reached the threshold, the gate driver IC reacts according to over-temperature warning action configuration **OTWCFG**.OTW_ACFG with a fault turn-off sequence or only signaling the event in **FLTEVT** .OTW_EVT.

The over-temperature warning circuit always triggers the fault event bit **FLTEVT** .OTW_EVT on exceeding the configured threshold.

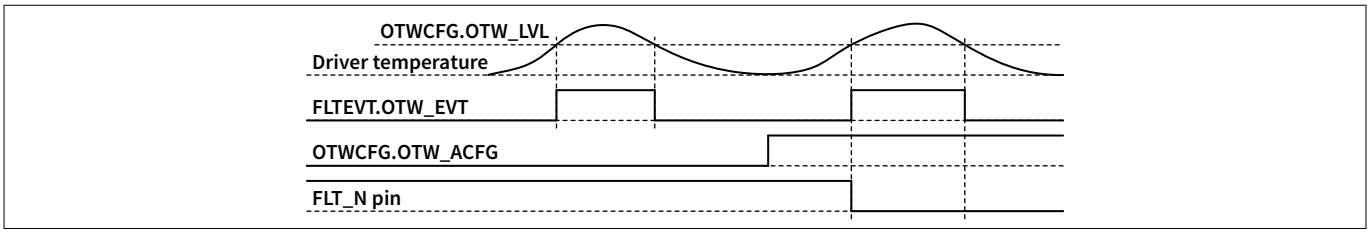

Figure 48 Over-temperature warning level and action

OTWCFG Address: $00B_H$

Over-temperature warning level and action Reset Value: 00_H

7	6	5	4	3	2	1	0
res				OTW_ACFG	OTW_LVL		
none				rw	rw		

Field	Bits	Type	Description
res	7:4	none	Reset: 0000_B
OTW_ACFG	3	rw	**Additional OTW action** 1_D Trigger fault 0_D No additional action Reset: 0_B
OTW_LVL	2:0	rw	**OTW temperature threshold level** 7_D 95°C ... steps of 6.4°C 0_D 140°C Reset: 000_B

4.1.13 D1LVL: DESAT disable and DESAT1 voltage threshold level

The register D1LVL allows the configuration of the following parameters:

DESAT1 voltage threshold level

The gate driver IC supports an adjustable DESAT voltage threshold level. The adjustment is used to adapt the driver to a variety of switches with different over current behavior, especially ohmic vs. bipolar behavior.

With the register value **D1LVL**.D1_V_LVL a DESAT voltage threshold level can be selected out of 32 values between 1.85 V and 9.18 V.

DESAT enable/disable

The register bit **D1LVL**.D_DIS configures the detection of desaturation events. The value 1_B will disable both DESAT detectors and leave the *DESAT* pin in tristate. The status register bits **FLTEVT** .D1_EVT and **FLTEVT** .D2_EVT will no longer show any DESAT events regardless of the voltage level at the *DESAT* pin.

D1LVL Address: $00C_H$

DESAT disable and DESAT1 voltage threshold level Reset Value: $1F_H$

7	6	5	4	3	2	1	0
res		**D_DIS**	**D1_V_LVL**				
none		rw	rw				

Field	Bits	Type	Description
res	7:6	none	Reset: 00_B
D_DIS	5	rw	**DESAT disable** 1_D Disabled, no DESAT reaction 0_D Enabled, normal DESAT behavior, default Reset: 0_B
D1_V_LVL	4:0	rw	**DESAT1 voltage threshold level** 31_D 9.18 V 30_D 8.89 V ... steps of 0.28 V 17_D 5.27 V 16_D 4.99 V 15_D 4.79 V ... steps of 0.2 V 1_D 2.01 V 0_D 1.85 V Reset: 11111_B

4.1.14 D1FILT: DESAT1 filter time and type

The register **D1LVL** allows the configuration of the following parameters:

DESAT1 filter time

The DESAT filter time is the time between passing the DESAT voltage threshold level and an acknowledgment of a DESAT event (internal signal). It is used to filter out spikes and noise which can lead to false triggering and inaccurate timing. The DESAT filter time together with the DESAT voltage threshold level and the DESAT filter type is used to set the sensitivity of the DESAT detection in the application.

With the 5 bit register value **D1FILT**.D1FILT_T the DESAT filter time is adjustable between 75 ns and 5975 ns.

DESAT1 filter counter type

The DESAT logic has two different digital filter types:

- up/down counter, if DESAT voltage is above DESAT voltage level counting is increased, below it will be decreased
- up/reset counter, if DESAT voltage is above DESAT voltage level counting is increased, below the counter will be cleared to zero

The filter can be used to adapt the gate driver IC to noisy environments. The filter counts the time, the DESAT level is above DESAT threshold level. If the threshold of DESAT filter time is reached a DESAT event is triggered.

The filter type is set by register bit **D1FILT**.D1FILT_C as:

- 1_B: up-down counter
- 0_B: up/reset counter

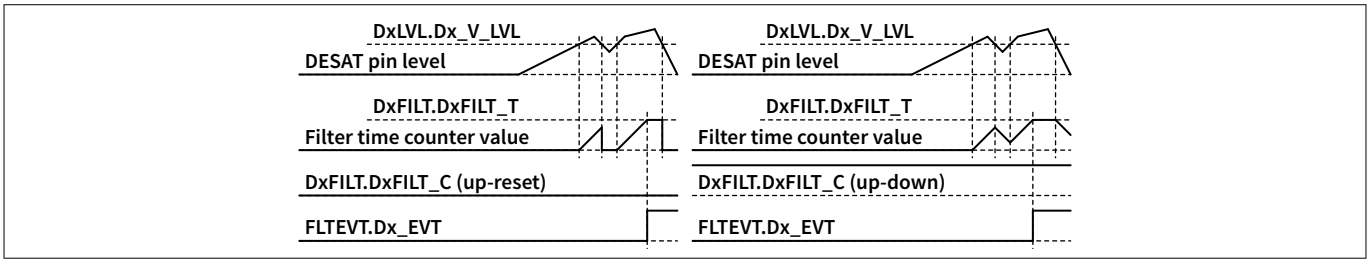

Figure 49 DESAT filter time and filter counter type

D1FILT Address: $00D_H$

DESAT1 filter time and type Reset Value: 08_H

7	6	5	4	3	2	1	0
res		**D1FILT_T**					**D1FILT_C**
none		rw					rw

Field	Bits	Type	Description
res	7:6	none	Reset: 00_B
D1FILT_T	5:1	rw	**DESAT1 filter time** 31_D 5975 ns ... steps of 400 ns 23_D 2775 ns ... steps of 200 ns 15_D 1175 ns ... steps of 100 ns 7_D 375 ns ... steps of 50 ns 1_D 75 ns 0_D n.a. Reset: 00100_B
D1FILT_C	0	rw	**DESAT1 filter counter type** 1_D Up-down 0_D Up-reset Reset: 0_B

4.1.15 D2LVL: DESAT2 enable during TLTOff, influence on fault off, and voltage threshold level

The register **D2LVL** allows the configuration of the following parameters:

DESAT2 during a two-level turn-off

Only DESAT2 monitoring can be activated during TLTOff. Triggering a DESAT2 event during TLTOff will not interrupt the two-level turn-off sequence.

The reduced gate voltage during TLTOff limits the maximum collector current and may increase the collector-emitter voltage (V_{CE}) at nominal IGBT currents and above. DESAT2 V_{CE} monitoring during TLTOff enables early overcurrent detection.

The bit to enable DESAT2 during TLTOff is located in register field **D2LVL**.D2_TLCFG

DESAT2 voltage threshold level

The gate driver IC supports an adjustable DESAT2 voltage threshold level separate from the DESAT1 voltage threshold level. The adjustment is used to adapt the gate driver IC to a variety of switches with different over current behavior, especially ohmic versus bipolar behavior.

With the register value **D2LVL**.D2_V_LVL a DESAT voltage threshold level can be selected out of 32 values between 1.85 V and 9.18 V.

DESAT2 fault off enable

DESAT2 action configuration is set in the action configuration register **D2LVL**.D2_ACFG. The bit distinguishes between monitoring only, or monitoring and starting fault turn off sequence.

The register bit **FLTEVT** .D2_EVT is always triggered on a DESAT2 event. The register bit **D2LVL**.D2_ACFG have the following actions assigned to it:

- 1_B: start a fault turn-off sequence and signaling via *FLT_N* to low a fault status event.
- 0_B: no autonomous turn-off and no signaling via *FLT_N*

D2LVL Address: $00E_H$

DESAT2 enable during TLTOff, influence on fault-off, and threshold level Reset Value: 10_H

7	6	5	4	3	2	1	0
res	**D2_TLCFG**	**D2_ACFG**	**D2_V_LVL**				
none	rw	rw	rw				

Field	Bits	Type	Description
res	7	none	Reset: 0_B
D2_TLCFG	6	rw	**DESAT2 action during a two level turn off** 1_D Enabled 0_D Disabled Reset: 0_B
D2_ACFG	5	rw	**DESAT2 fault off enable** 1_D Enabled, trigger fault off 0_D Disabled, no fault off Reset: 0_B

(table continues...)

(continued)

Field	Bits	Type	Description
D2_V_LVL	4:0	rw	**DESAT2 voltage threshold level** 31_D 9.18 V 30_D 8.89 V ... steps of 0.28 V 17_D 5.27 V 16_D 4.99 V 15_D 4.79 V ... steps of 0.2 V 1_D 2.01 V 0_D 1.85 V Reset: 10000_B

4.1.16 D2FILT: DESAT2 filter time and type

The register D2FILT allows the configuration of the following parameters:

DESAT2 filter time

The DESAT filter time is the time between passing the DESAT voltage threshold level and an acknowledgment of a DESAT event (internal signal). It is used to filter out spikes and noise which can lead to false triggering and inaccurate timing. The DESAT filter time together with the DESAT voltage threshold level and the DESAT filter type is used to set the sensitivity of the DESAT detection in the application.

With the 5 bit register value **D2FILT**.D2FILT_T the DESAT filter time is adjustable between 75 ns and 5975 ns.

DESAT2 filter counter type

The DESAT2 logic has two different digital filter types and its configuration bit is located in register **D2FILT**.D2FILT_C:

- 1_B: up/down counter
  - if the DESAT voltage is above DESAT voltage level counting is increased, below it will be decreased
  - during a single PWM on duration multiple filtered threshold crossings can be detected and count as individual events for the **D2ECNT** event counter
- 0_B: up/reset counter
  - if DESAT voltage is above DESAT voltage level counting is increased, below the counter will be cleared to zero
  - during a single PWM on duration, only a single filtered threshold crossing can be detected and counts as event for the **D2ECNT** event counter

The filter can be used to adapt the gate driver IC to noisy environments. The filter counts the time, the DESAT level is above DESAT threshold level. If the threshold of DESAT filter time is reached an DESAT event is triggered.

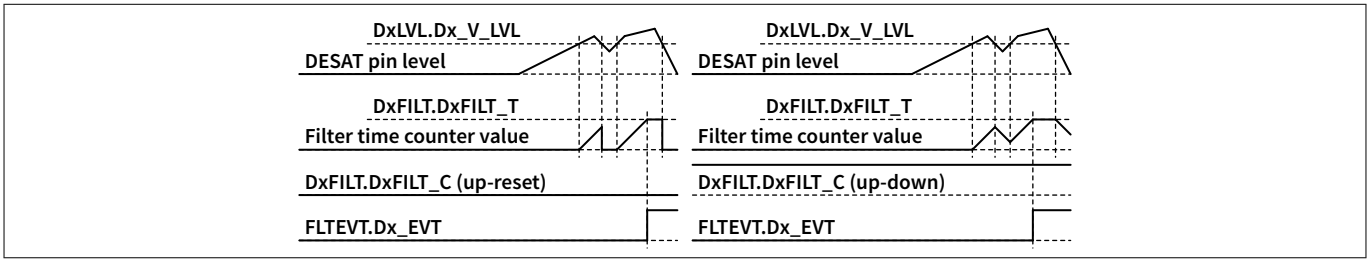

Figure 50 DESAT filter time and filter counter type

D2FILT Address: $00F_H$

DESAT2 filter time and type Reset Value: $3F_H$

7	6	5	4	3	2	1	0
res		**D2FILT_T**					**D2FILT_C**
none		rw					rw

Field	Bits	Type	Description
res	7:6	none	Reset: 00_B
D2FILT_T	5:1	rw	**DESAT2 filter time** 31_D 5975 ns ... steps of 400 ns 23_D 2775 ns ... steps of 200 ns 15_D 1175 ns ... steps of 100 ns 7_D 375 ns ... steps of 50 ns 1_D 75 ns 0_D n.a. Reset: 11111_B
D2FILT_C	0	rw	**DESAT2 filter counter type** 1_D Up-down 0_D Up-reset Reset: 1_B

4.1.17 D2CNTLIM: DESAT2 event counter limit

While the register **D2ECNT** counts the DESAT2 events, the DESAT2 event counter limit in the register field **D2CNTLIM**.D2CNTLIM serves as comparator limit.

If the event counter of register **D2ECNT** reaches the compare limit, the register bit **FLTEVT** .D2_EVT is set to 1_B.

Description of values for DESAT2 event counter limit:

- 00_H: deactivates DESAT2 function, register bit **FLTEVT** .D2_EVT stays at 0_B
- 01_H: a single DESAT2 comparator event leads to **FLTEVT** .D2_EVT = 1_B, similar as in DESAT1
- a value larger than 01_H requires multiple DESAT2 comparator events for the register bit **FLTEVT** .D2_EVT to be set to 1_B

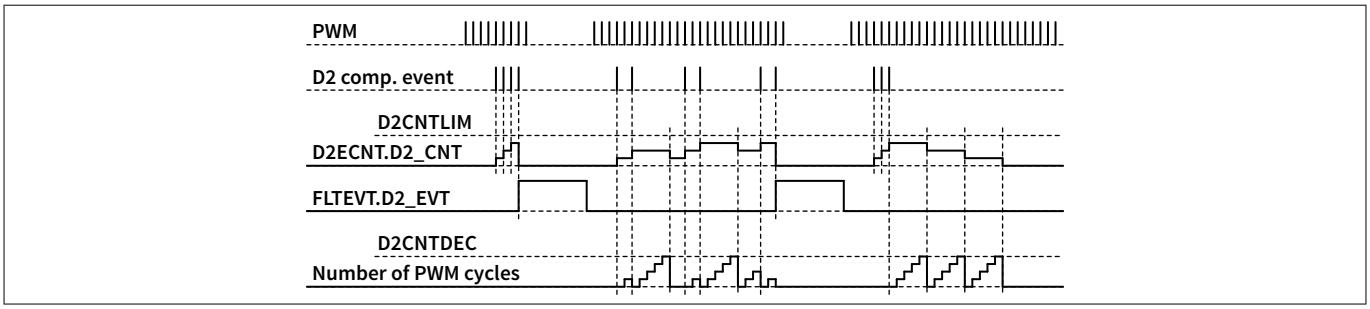

Figure 51 DESAT2 event counter limit and count down

Parameters of shown example: **D2CNTLIM** = 04_H, **D2CNTDEC** = 04_H; The value of register **D2ECNT** will only internally reach the limit, but will reset immediately with the reporting of the bit **FLTEVT** .D2_EVT = 1_B.

D2CNTLIM Address: 010_H

DESAT2 event counter limit to trigger **FLTEVT**.D2_EVT Reset Value: 01_H

7	6	5	4	3	2	1	0
res		**D2CNTLIM**					
none		rw					

Field	Bits	Type	Description
res	7:6	none	Reset: 00_B
D2CNTLIM	5:0	rw	**Number of DESAT2 events to trigger FLTEVT .D2_EVT** 63_D 63 events 62_D 62 events ... number of events 1_D 1 event 0_D Disabled, DESAT2 function disabled Reset: 000001_B

4.1.18 D2CNTDEC: DESAT2 event count down

The DESAT2 long time filter, PWM *IN* counter decrement is a 8 bit counter in register field **D2CNTDEC**.D2CNTDEC. The register defines the number of PWM cycles at *IN* pin after the last DESAT2 event which are necessary to decrement DESAT2 event counter by one.

Counter settings for DESAT2 long time filter, *IN* counter:

- 00_H deactivates the decrement function
- 01_H decrements the DESAT2 event counter by one after every PWM *IN* cycle without a registered DESAT2 comparator event.
- n_H decrements the DESAT2 event counter by one after every n-th PWM *IN* cycle without any registered DESAT2 comparator events.

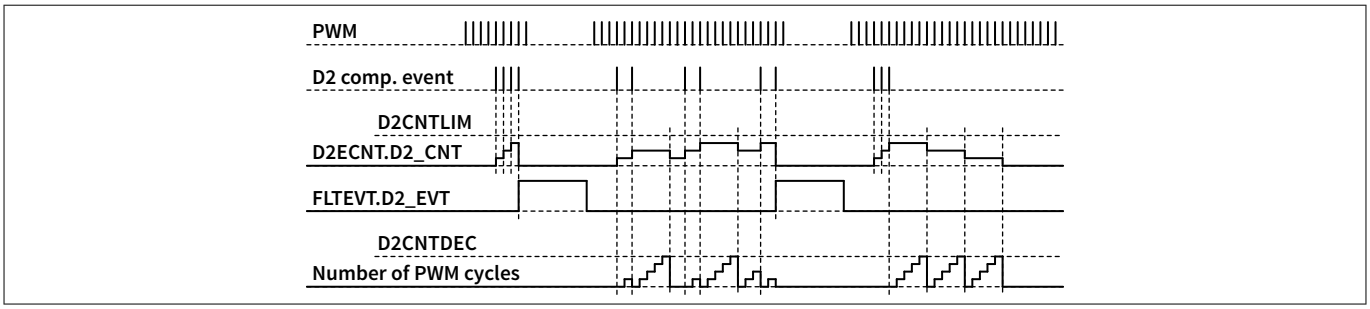

Figure 52 DESAT2 event counter limit and count down

Parameters of shown example: **D2CNTLIM** = 04_H, **D2CNTDEC** = 04_H; The value of register **D2ECNT** will only internally reach the limit, but will reset immediately with the reporting of the bit **FLTEVT** .D2_EVT = 1_B.

D2CNTDEC Address: 011_H

DESAT2 event count down Reset Value: 00_H

7	6	5	4	3	2	1	0
D2CNTDEC							
rw							

Field	Bits	Type	Description
D2CNTDEC	7:0	rw	**Number of PWM *IN* cycles without any registered DESAT2 comparator events required to decrease the DESAT2 event counter by one** $>0_D$ number of PWM *IN* cycles 0_D No count down or reset by PWM Reset: 00_H

4.1.19 DLEBT: DESAT leading edge blanking time

The DESAT leading edge blanking time is the time between turn-on of the *ON* pin and activation of the DESAT function.

Until the end of leading edge blanking the gate driver IC clamps *DESAT* to *GND2* pin. The DESAT comparator ignores voltage levels above DESAT voltage threshold. Set the time to a value after the V_{CE} voltage falls below the DESAT threshold level. DESAT1 and DESAT2 share the same DESAT leading edge blanking time.

With the 6 bit register value **DLEBT**.D_LEB_T the DESAT leading edge blanking time $t_{DESATleb,x}$ is adjustable between 100 ns and 3300 ns.

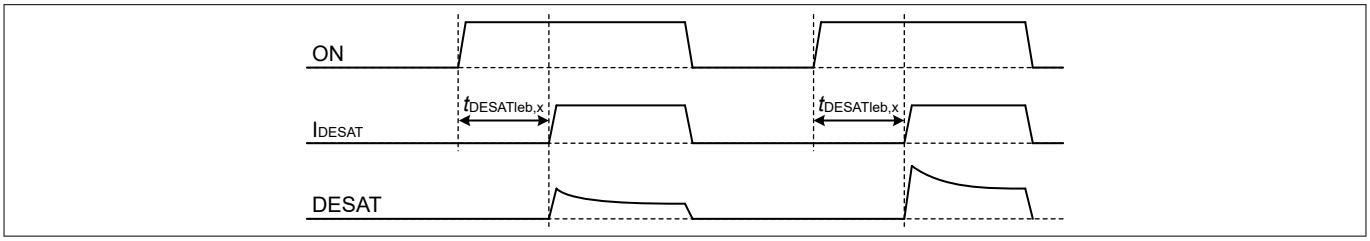

Figure 53 DESAT leading edge blanking time

DLEBT Address: 012_H

DESAT leading edge blanking time Reset Value: 05_H

7	6	5	4	3	2	1	0
res		D_LEB_T					
none		rw					

Field	Bits	Type	Description
res	7:6	none	Reset: 00_B
D_LEB_T	5:0	rw	**DESAT leading edge blanking time for DESAT1 and DESAT2** 63_D 3300 62_D 3250 ... Steps of 50 ns 1_D 200 0_D 100 Reset: 000101_B

4.1.20 F2ODLY: Delay from fault event to gate driver off

In some topologies the fault turn-off needs to be delayed for individual switch positions. The fault turn-off delay time $t_{FAULTOFFn}$ is adjustable in the register **F2ODLY**.F2O_DLY between 0 µs and 7.763 µs.

F2ODLY Address: 013_H

Delay from fault event to gate driver off Reset Value: 00_H

7	6	5	4	3	2	1	0
res			F2O_DLY				
none			rw				

Field	Bits	Type	Description
res	7:5	none	Reset: 000_B
F2O_DLY	4:0	rw	**FAULT EVENT to Gate driver off added delay** 31_D 7.763 µs 30_D 7.513 µs ... 0.25 µs step size 1_D 0.263 µs 0_D 0 µs Reset: 00000_B

4.1.21 DTECOR: DESAT temperature compensation

The 1ED38x0 family offers a gate driver temperature dependent DESAT threshold voltage level adjustment. It is used to compensate the temperature behavior of the DESAT diode and/or the IGBT saturation voltage to enhance the DESAT accuracy.

The DESAT temperature compensation can be used as well for lowering DESAT thresholds under high temperature conditions. The temperature compensation is applied to DESAT1 and DESAT2 with the same compensation parameter.

The internal gate driver junction temperature is used to calculate an offset voltage to the DESAT voltage $V_{DESAT,n}$. This calculated DESAT voltage V_{DESAT_comp} is applied to the DESAT comparator. The step size between two compensated threshold voltage levels is 40 mV.

$$V_{\mathrm{DESAT_comp}} = V_{\mathrm{DESAT,n}} + \mathrm{VT}_{\mathrm{DESAT,n}} \cdot (T_J - T_{\mathrm{DESAT,n}} - 25\ °\mathrm{C})$$

The DESAT temperature compensation is adjustable in the register **DTECOR** and allows the configuration of the following parameters:

DESAT temperature compensation coefficient, $VT_{DESAT,n}$

With the 4 bit register value **DTECOR**.DTE_COEF the DESAT temperature compensation coefficient is adjustable between -40.3 mV/°C and 32.8 mV/°C.

DESAT temperature offset, $T_{DESAT,n}$

With the 4 bit register value **DTECOR**.DTE_OS the DESAT temperature offset is adjustable between -48°C and 40°C.

The maximum DESAT threshold voltage level is 10.33 V, higher compensated voltages are limited to 10.33 V. The minimum DESAT threshold voltage level is 1.85 V, lower compensated voltages are limited to 1.85 V.

The decimal value for **DTECOR**.DTE_COEF and **DTECOR**.DTE_OS follow a two's complement coding for positive and negative 4 bit numbers.

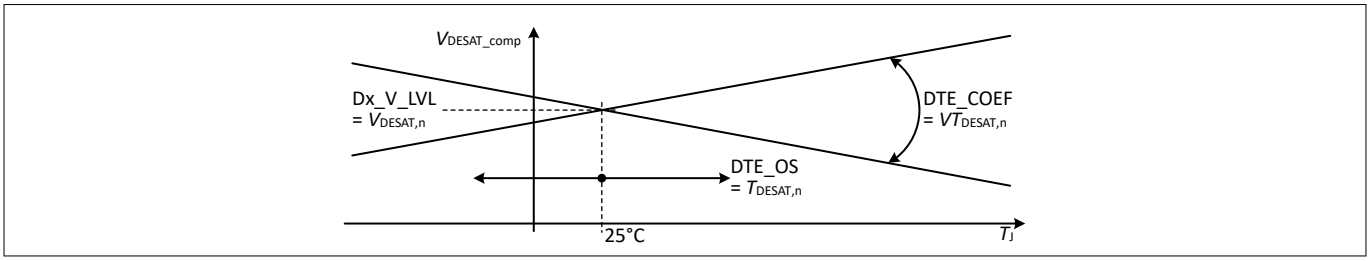

Figure 54 DESAT temperature compensation with gain and offset

DTECOR Address: 014_H

DESAT temperature compensation Reset Value: 00_H

7	6	5	4	3	2	1	0
DTE_COEF				**DTE_OS**			
rw				rw			

Field	Bits	Type	Description
DTE_COEF	7:4	rw	**Gain factor corresponding value (scaled value)** -8_D (8_H) -40.3 mV/°C -7_D (9_H) -32.8 mV/°C -6_D (A_H) -25.2 mV/°C -5_D (B_H) -17.7 mV/°C -4_D (C_H) -12.6 mV/°C -3_D (D_H) -7.6 mV/°C -2_D (E_H) -5.0 mV/°C -1_D (F_H) -2.5 mV/°C 0_D (0_H) 0 mV/°C 1_D (1_H) 2.5 mV/°C 2_D (2_H) 5.0 mV/°C 3_D (3_H) 7.6 mV/°C 4_D (4_H) 12.6 mV/°C 5_D (5_H) 17.7 mV/°C 6_D (6_H) 25.2 mV/°C 7_D (7_H) 32.8 mV/°C Reset: 0000_B
DTE_OS	3:0	rw	**Temperature offset** -8_D (8_H) -48°C -7_D (9_H) -42°C -6_D (A_H) -36°C ... Steps of 6°C -1_D (F_H) -6°C 0_D (0_H) 0°C 1_D (1_H) 6°C ... Steps of 6°C 5_D (5_H) 30°C 6_D (6_H) 36°C 7_D (7_H) 40°C Reset: 0000_B

4.1.22 DRVFOFF: Type of fault switch-off

The gate driver IC supports the following fault turn-off sequences:

- hard switch-off
- two-level turn-off
- soft turn-off

The gate driver fault turn-off behavior can be configured in register **DRVFOFF**.DRV_FOFF.

DRVFOFF Address: 015_H

Type of fault switch-off Reset Value: 00_H

7	6	5	4	3	2	1	0
res						**DRV_FOFF**	
none						rw	

Field	Bits	Type	Description
res	7:2	none	Reset: 000000_B
DRV_FOFF	1:0	rw	**Type of fault switch-off** 3_D reserved 2_D TLTOff 1_D Hard switch-off 0_D Soft-off Reset: 00_B

4.1.23 DRVCFG: Type of normal switch-off and TLTOff gate charge range

The register **DRVCFG** allows the configuration of the following parameters:

Two-level turn-off gate charge range

The gate charge range register field influences the TLTOff voltage level and ramp-speed control loop. Selecting an appropriate range for the connected power switch results in accurate levels and ramps.
The two-level turn-off gate charge range can be configured in register **DRVCFG**.TLTO_GCH.

Type of normal switch-off

The gate driver IC supports the following turn-off sequences during normal switching operation:
- hard switching turn-off
- two-level turn-off

The gate driver normal turn-off behavior can be configured in register **DRVCFG**.STD_OFF.

DRVCFG Address: 016_H

Type of normal switch-off and TLTOff gate charge range Reset Value: 00_H

7	6	5	4	3	2	1	0
res			**TLTO_GCH**		**res**		**STD_OFF**
none			rw		none		rw

Field	Bits	Type	Description
res	7:5	none	Reset: 000_B
TLTO_GCH	4:3	rw	**Two-level turn-off gate charge range** 3_D low load, gate charge equivalent below 1 nF 2_D medium to high load, gate charge equivalent between 10 nF and 47 nF 1_D low to medium load, gate charge equivalent between 1 nF and 10 nF 0_D high load, gate charge equivalent above 47 nF Reset: 00_B
res	2:1	none	Reset: 00_B

(table continues...)

(continued)

Field	Bits	Type	Description
STD_OFF	0	rw	**Type of normal switch-off** 1_D TLTOff 0_D Hard switch-off Reset: 0_B

4.1.24 TLTOC1: TLTOff level and ramp A

The two-level turn-off function can be adjusted with four parameters in the registers **TLTOC1** and **TLTOC2** . The register **TLTOC1** allows the configuration of the following parameters:

TLTOff plateau voltage (V_{TLTOFF})

The two-level turn-off plateau voltage is a 5 bit value and can be adjusted within the register **TLTOC1**.TLTO_V in 32 steps between 4.25 V and 12.0 V .

TLTOff voltage ramp slope A (RA_{TLTOFF})

The ramp slope for the voltage ramp between fully turn-on voltage (closed to *VCC2*) and two-level turn-off plateau voltage is a 2 bit value and can be adjusted within the register **TLTOC1**.TLTO_RA in four steps between 7.5 V/µs and 60 V/µs.

TLTOC1 Address: 017_H

TLTOff level and ramp A Reset Value: $4E_H$

7	6	5	4	3	2	1	0
res	**TLTO_V**					**TLTO_RA**	
none	rw					rw	

Field	Bits	Type	Description
res	7	none	Reset: 0_B
TLTO_V	6:2	rw	**Intermediate level** 31_D 12.0 V 30_D 11.75 V ... Steps of 0.25 V 19_D 9.0 V (default) ... Steps of 0.25 V 1_D 4.5 V 0_D 4.25 V Reset: 10011_B
TLTO_RA	1:0	rw	**Ramp A dV/dt from on level to intermediate level** 3_D 60 V/µs 2_D 30 V/µs 1_D 15 V/µs 0_D 7.5 V/µs Reset: 10_B

4.1.25 TLTOC2: TLTOff duration and ramp B

The two-level turn-off function can be adjusted with four parameters in the registers **TLTOC1** and **TLTOC2**. The register **TLTOC2** allows the configuration of the following parameters:

TLTOff voltage ramp slope B (RB_{TLTOFF})

The ramp slope for the voltage ramp between two-level turn-off plateau voltage and fully turn off voltage (closed to *VEE2*) is a 3 bit value and can be adjusted within the register **TLTOC2**.TLTO_RB in four steps between 7.5 V/µs and 60 V/µs, and hard switch-off.

The decimal value for TLTO_RB follows a two's complement coding for positive and negative 3 bit numbers.

TLTOff ramp A and plateau time (t_{TLTOFF})

The two-level turn-off time is a 5 bit value and can be adjusted within the register **TLTOC2**.TLTO_T in 32 steps between 0 µs and 7.75 µs. If TLTOff plateau time is set to 0 µs only voltage ramp B will be active.

TLTOC2 Address: 018_H

TLTOff duration and ramp B Reset Value: 48_H

7	6	5	4	3	2	1	0
TLTO_RB			**TLTO_T**				
rw			rw				

Field	Bits	Type	Description
TLTO_RB	7:5	rw	**Ramp B dV/dt from intermediate level to off level** 3_D (011_B) res 2_D (010_B) res 1_D (001_B) res 0_D (000_B) max dV/dt, hard switch-off -1_D (111_B) 60 V/µs -2_D (110_B) 30 V/µs -3_D (101_B) 15 V/µs -4_D (100_B) 7.5 V/µs Reset: 010_B
TLTO_T	4:0	rw	**Counter with 250 ns granularity** 31_D 7.75 µs 30_D 7.50 µs ... Steps of 250 ns 1_D 0.25 µs 0_D 0 µs Reset: 01000_B

4.1.26 CSSOFCFG: Soft turn-off current

The soft turn-off is implemented as a current source with a 4 bit value in the register **CSSOFCFG** and can be adjusted relative to the nominal current between 0.7% and 11.7%.

CSSOFCFG Address: 019_H

Soft-off current Reset Value: 09_H

7	6	5	4	3	2	1	0
res				CSSOFF_I			
none				rw			

Field	Bits	Type	Description
res	7:4	none	Reset: 0000_B
CSSOFF_I	3:0	rw	**Soft-off current relative to $I_{OFF,min}$** 15_D 11.7% ... steps of 0.74% 9_D 7.3% ... steps of 0.74% 0_D 0.7% Reset: 1001_B

4.1.27 CLCFG: *CLAMP* and pin monitoring filter time and type, *CLAMP* output types and disable

The register **CLCFG** allows the configuration of the following parameters:

Filter time for *CLAMP* and pin status monitoring

The filter for *CLAMP* and pin status monitoring is filtering out short detection pulses from the pin voltage level monitoring circuit before activating the individual pin status flag. This affects the time to the activation of the *CLAMP* pin after the *ON* pin voltage has dropped below the *VEE2* + 2 V threshold. The filter time together with the filter type are controlling the sensitivity of the pin status detection in an application. So in case a pin status flag is linked to a dedicated output, individual reaction times apply for the output pin to change state.

E.g. The short pulse behavior of TLTOff expects the voltage at the *OFF* pin to rise above the TLTOff plateau voltage to transition from hard switch-off to the TLTOff ramp/plateau switch-off sequence. If the switch-off command arrives earlier than the configured filter time, the output still uses the hard switch-off even though the voltage at the *OFF* pin was already above the TLTOff plateau voltage.

The 3 bit parameter of the filter time for *CLAMP* and pin status monitoring is located in the register **CLCFG**.CLFILT_T and is adjustable between 105 ns and 370 ns.

Filter type for pin status monitoring

The filter logic supports two different digital filter types for the pin voltages at the *ON* and *OFF* pin. The filter can be used to adapt the gate driver IC to noisy environment.

- up/down counter, depending on pin level the filter timer is increased or decreased
- up/reset counter, depending on the pin level the filter timer is increased, or will be cleared to zero

The bit of the filter type is located in register **CLCFG**.CLFILT_C, a 1_B configures an up-down counter, 0_B configures an up/reset counter.

This does not apply to the *CLAMP* threshold monitoring where the filter always behaves like an up/down counter.

CLAMP output types

The output stage offers two different settings:

- direct gate clamping with an open drain output for medium clamping current
- pre-driver output, to clamp IGBT gate with external transistor for high clamping current

The *CLAMP* output can be configured in clamp configuration register **CLCFG**.CL_TYPE.

CLAMP disable

The register parameter **CLCFG**.CL_DIS enables and disables the *CLAMP* function. Use this bit to disable the *CLAMP* function if the ADC function at this pin (**ADCCFG** .VEXT_EN) is in use.

CLCFG Address: $01A_H$

CLAMP and pin monitoring filter time and type, *CLAMP* output types and disable Reset Value: 20_H

7	6	5	4	3	2	1	0
res		**CLFILT_T**			**CLFILT_C**	**CL_TYPE**	**CL_DIS**
none		rw			rw	rw	rw

Field	Bits	Type	Description
res	7:6	none	Reset: 00_B
CLFILT_T	5:3	rw	**Filter time for CLAMP and pin status monitoring** 7_D 370 ns ... steps of 40 to 50 ns 4_D 235 ns ... steps of 40 to 50 ns 1_D 105 ns 0_D reserved Reset: 100_B
CLFILT_C	2	rw	**Filter counter type** 1_D Up-down 0_D Up-reset Reset: 0_B
CL_TYPE	1	rw	**CLAMP output type** 1_D Pre driver output for external CLAMP transistor 0_D Open drain for direct gate connection Reset: 0_B
CL_DIS	0	rw	**CLAMP function** 1_D Disable 0_D Enable Reset: 0_B

4.1.28 SOTOUT: Switch-off timeout time and fault signaling

The register **SOTOUT** allows the configuration of the following parameters:

Switch-off timeout time

The switch-off timeout is tailored to the different turn-off scenarios. The total switch-off timeout varies for soft-off, TLTOff and hard switch-off.

- Soft-off: After an soft-off offset time of typical 2.4 µs the adjustable switch-off timeout time is applied
- TLTOff: After the adjustable two-level turn-off time the adjustable switch-off timeout time is applied
- Hard switch-off: Only the adjustable switch-off timeout time is applied

The switch-off timeout time is a 3 bit value located in the register **SOTOUT**.SOTOUT_T and is adjustable between 0.2 µs and 3.2 µs.

Switch-off timeout fault trigger

The switch-off timeout always sets the register bit **FLTEVT** .SOTO_EVT to 1_B on timeout detection. The switch-off timeout fault trigger bit configures whether a switch-off timeout event also triggers a fault event.

The fault trigger bit is located in register **SOTOUT**.SOTOUT_F.

- **SOTOUT**.SOTOUT_F = 0_B no fault event
- **SOTOUT**.SOTOUT_F = 1_B fault event trigger on timeout detection

SOTOUT Address: $01B_H$

Switch-off timeout time and fault signaling Reset Value: $0C_H$

7	6	5	4	3	2	1	0
res				**SOTOUT_T**			**SOTOUT_F**
none				rw			rw

Field	Bits	Type	Description
res	7:4	none	Reset: 0000_B
SOTOUT_T	3:1	rw	**Switch-off timeout time until forced switch-off** 7_D 3200 ns 6_D 2400 ns 5_D 1600 ns 4_D 1200 ns 3_D 800 ns 2_D 600 ns 1_D 400 ns 0_D 200 ns Reset: 110_B
SOTOUT_F	0	rw	**Switch-off timeout fault trigger, FLTEVT .SOTO_EVT is always set on time out detection** 1_D Enable 0_D Disable Reset: 0_B

4.1.29 CFGOK: Register configuration lock

The **CFGOK** register is used to indicate to the gate driver logic that the user parameter configuration is finished and the parameters are set. After receiving the **CFGOK** flag the gate driver IC starts the further proceeding: self test, transfer of parameters to the output side, signaling ready.

CFGOK Address: $01C_H$

Register configuration access lock Reset Value: 00_H

7	6	5	4	3	2	1	0
res							**USER_OK**
none							rw

Field	Bits	Type	Description
res	7:1	none	Reset: 0000000_B
USER_OK	0	rw	**Register configuration complete and locked indicator** 1_D Configured, write protection on configuration registers 0_D Not configured,write enable on configuration registers Reset: 0_B

4.1.30 CLEARREG: Clear event counter registers for DESAT2, *VCC1* UVLO, *VCC2* UVLO, event flags, and soft-reset

The clear event counter register **CLEARREG** is used for clearing of the following counters and registers:

- .D2E_CL: DESAT2 event counter
- .UV2F_CL: counter of *VCC2* supply voltage spike detection
- .UV1F_CL: counter of *VCC1* supply voltage spike detection
- .EVTSI_CL: sticky bit register
- .SOFT_RST: all configuration registers

The register bits return to 0_B without user interaction, after the linked task has been completed.

CLEARREG Address: $01D_H$

Clear event counter registers for DESAT2, *VCC1* UVLO, *VCC2* UVLO, event flags, and soft-reset Reset Value: 00_H

7	6	5	4	3	2	1	0
res			**D2E_CL**	**UV2F_CL**	**UV1F_CL**	**EVTSI_CL**	**SOFT_RST**
none			none	none	none	none	none

Field	Bits	Type	Description
res	7:5	none	Reset: 000_B

(table continues...)

(continued)

Field	Bits	Type	Description
D2E_CL	4	none	**DESAT2 event counter: D2ECNT** 1_D Clear 0_D No change Reset: 0_B
UV2F_CL	3	none	**UVLO2 event counter: UV2FCNT** 1_D Clear 0_D No change Reset: 0_B
UV1F_CL	2	none	**UVLO1 event counter: UV1FCNT** 1_D Clear 0_D No change Reset: 0_B
EVTSI_CL	1	none	**Sticky event flags: EVTSTICK , SECUVEVT** 1_D Clear 0_D No change Reset: 0_B
SOFT_RST	0	none	**Soft reset: all configuration registers return to their reset values** 1_D Initiate 0_D No change Reset: 0_B

4.2 Status registers

4.2.1 Sticky bits

Gate driver events set sticky bits to 1_B. The bit state indicates the event described for the individual bit has occurred at least once. Clearing sticky bit registers returns their value to 0_B.

The bits defined in the registers **EVTSTICK** and **SECUVEVT** are sticky.

Clearing sticky bit registers

- Clearing all sticky bit registers at once
  1. Enter parameter configuration state
  2. Write 1_B to register bit **CLEARREG**.EVTSI_CL
  3. Return to normal operation state

  All registers with sticky bits are set to 0_H
- Clearing by reading sticky bit registers
  1. Start reading registers from a single gate driver IC
  2. Reading a sticky bit register will return its current state
  3. The sticky bit register then returns to the value 0_H

  ***Note**: A consecutive read of all registers will therefore clear all sticky bit registers as well.*

4.2.2 RDYSTAT: Status of input side, output side, and gate driver IC

The register **RDYSTAT** has three bits to indicate the gate driver ready status:

- .CHIP_RDY: gate driver IC ready
- .PRI_RDY: input side ready
- .SEC_RDY: output side ready

RDYSTAT Address: 026_H

Status of input side, output side, and gate driver IC Reset Value: 00_H

7	6	5	4	3	2	1	0
res					**SEC_RDY**	**PRI_RDY**	**CHIP_RDY**
none					r	r	r

Field	Bits	Type	Description
res	7:3	none	Reset: 00000_B
SEC_RDY	2	r	**Output side status** 1_D Ready, Feedback from output side received 0_D Not ready, Start up pending Reset: 0_B
PRI_RDY	1	r	**Input side status** 1_D Ready 0_D Not ready Reset: 0_B

(table continues...)

(continued)

Field	Bits	Type	Description
CHIP_RDY	0	r	**Gate driver IC status** 1_D Ready 0_D Not ready Reset: 0_B

4.2.3 SECUVEVT: Output side UVLO events causing a not ready state (sticky bits)

The register **SECUVEVT** stores status results for hardware and measurement based monitoring functions.

Monitoring *VCC2*

The gate driver IC is equipped with the following *VCC2* UVLO functions and related status bits:

- Normal *VCC2* supply UVLO event **SECUVEVT**.UV_VCC2
  It uses the filtered *VCC2* supply voltage, comparable to state-of-the-art UVLO circuits. The status of this bit influences the *RDYC* output.
- *VCC2* supply soft UVLO event **SECUVEVT**.UVSVCC2
  It uses the measured *VCC2* supply voltage from the ADC. Therefore it is strongly filtered. The function can be configured to tailor the UVLO to the application and adapt to different driving set up.

Monitoring *VEE2*

The gate driver IC is equipped with the following *VEE2* UVLO functions and related status bits:

- Normal *VEE2* supply UVLO event **SECUVEVT**.UV_VEE2
  It uses the filtered *VEE2* supply voltage, comparable to state of the art UVLO circuits. Depending on the configuration the status can influence the *RDYC* output.
- *VEE2* supply soft UVLO event **SECUVEVT**.UVSVEE2
  It uses the measured and strongly filtered *VEE2* supply voltage from the ADC. The function can be configured to tailor the UVLO to different negative supply voltage levels.

Internal monitoring

The gate driver IC is monitoring the status of the internal power supplies. The status is indicated in register **SECUVEVT**.INT_PWR.

SECUVEVT Address: 028_H

Output side UVLO events causing a not ready state (sticky bits) Reset Value: 00_H

7	6	5	4	3	2	1	0
res	**INT_PWR**	**UVSVEE2**	**UVSVCC2**	**res**	**UV_VEE2**	**UV_VCC2**	**res**
none	r	r	r	r	r	r	r

Field	Bits	Type	Description
res	7	none	Reset: 0_B

(table continues...)

(continued)

Field	Bits	Type	Description
INT_PWR	6	r	**Internal power supply** 1_D Level below threshold detected 0_D Supply okay Reset: 0_B
UVSVEE2	5	r	***VEE2* soft UVLO state** 1_D Level above **UVSVEE2C** register value detected 0_D Supply okay or *VEE2* soft UVLO disabled **UVSVEE2C** .UVSVEE2E Reset: 0_B
UVSVCC2	4	r	***VCC2* soft UVLO state** 1_D Level below **UVSVCC2C** register value detected 0_D Supply okay or *VCC2* soft UVLO disabled **UVSVCC2C** .UVSVCC2E Reset: 0_B
res	3	r	Reset: 0_B
UV_VEE2	2	r	***VEE2* UVLO state** 1_D Level above **UVTLVL** .UVVEE2TL threshold detected 0_D Supply okay or *VEE2* UVLO disabled **UVTLVL** .UVVEE2TL Reset: 0_B
UV_VCC2	1	r	**VCC2 UVLO switch based threshold state** 1_D Level below **UVTLVL** .UVVCC2TL configured switch threshold detected 0_D Supply okay Reset: 0_B
res	0	r	Reset: 0_B

4.2.4 GFLTEVT: Indicator of active fault handling

The register **GFLTEVT** indicates an active fault source or a pending fault-off event at the output side. The output side fault-off pending state always has priority over the input side state. The output side status can hide the actual input side status due to fast fault-off handling of a current output on-state. This can result in a 03_H value even though *FLT_N* is still low.

GFLTEVT Address: 029_H

Indicator of active fault handling Reset Value: 03_H

7	6	5	4	3	2	1	0
res						**SEC_FLTN**	**PRI_FLTN**
none						r	r

Field	Bits	Type	Description
res	7:2	none	Reset: 000000_B

(table continues...)

(continued)

Field	Bits	Type	Description
SEC_FLTN	1	r	**Output side** 1_D No fault source active, no fault-off pending 0_D Fault handing active Reset: 1_B
PRI_FLTN	0	r	**Input side** 1_D No fault 0_D *FLT_N* low without an earlier output side fault handling Reset: 1_B

4.2.5 FLTEVT: Fault status and events of input side and output side

Fault events flagged in the **FLTEVT** register are typically signaled at *FLT_N* pin by switching the pin voltage level to *GND1*. The gate driver IC offers configurable and non-configurable fault events.

Fixed, non-configurable fault event

- Over temperature protection (Status register **FLTEVT**.OTP_EVT)

Configurable fault events

- Desaturation detection of IGBT, DESAT event (Status register **FLTEVT** .D1_EVT, **FLTEVT**.D2_EVT), configurable within register **D1LVL** .D_DIS, the value 1_B will disable both DESAT detectors
- Desaturation detection of IGBT, DESAT2 event (Status register **FLTEVT** .D2_EVT), configurable within register **D2LVL** .D2_ACFG
- Over-temperature warning (Status register **FLTEVT**.OTW_EVT), configurable within register **OTWCFG** .OTW_ACFG
- Switch-off timeout event (Status register **FLTEVT**.SOTO_EVT) is monitoring the *ON* pin voltage during switch-off, configurable within register **SOTOUT** .SOTOUT_F, threshold fixed at V_{ON} = VEE2+2 V
- Fault triggered by comparison to external voltage measurement at the *CLAMP* pin (Status register **FLTEVT**.VEXTFLT), configurable within register **ADCCFG** .VEXTL_EN

Over-temperature protection

The gate driver IC is equipped with an over-temperature shut-down protection. If the junction temperature is rising above 160°C the gate driver IC is initiating a fault-off sequence and the over-temperature fault event bit **FLTEVT**.OTP_EVT is set.

Over-temperature warning overview

In contrast to the non-adjustable gate driver over-temperature protection, the adjustable over-temperature warning level is used to signal an application specific non proper operation condition, which may influence life time.

The measured temperature is compared to the over-temperature warning level **OTWCFG** .OTW_LVL. If temperature has reached the threshold, the gate driver IC reacts according to over-temperature warning action configuration **OTWCFG** .OTW_ACFG with a fault turn-off sequence or only signaling the event in **FLTEVT**.OTW_EVT.

Switch-off timeout event bit

The switch-off timeout event bit **FLTEVT**.SOTO_EVT shows the timeout status:

- 0_B: no timeout event occurred
- 1_B: timeout event triggered

Related reference: Switch-off timeout until forced switch-off

Desaturation detection

Enabled DESAT events always set the linked register bit in the register **FLTEVT**:

- .D1_EVT reports a DESAT1 event. It also starts a fault turn-off sequence and signals the fault status via *FLT_N* to low
- .D2_EVT reports a DESAT2 event. Futher actions depend on the configuration in register **D2LVL** .D2_ACFG

Turn-off monitoring

The gate driver monitors the gate voltage and sets the register bit **FLTEVT** .VOUT_ST to 1_B as long as the voltage at the *ON* pin is above *VEE2* + 2 V.

FLTEVT Address: $02A_H$

Fault status and events of input side and output side Reset Value: 00_H

7	6	5	4	3	2	1	0
res	**VEXTFLT**	**VOUT_ST**	**SOTO_EVT**	**OTW_EVT**	**OTP_EVT**	**D2_EVT**	**D1_EVT**
none	r	r	r	r	r	r	r

Field	Bits	Type	Description
res	7	none	Reset: 0_B
VEXTFLT	6	r	**State of external voltage at *CLAMP* pin (ADC)** 1_D Limit triggered 0_D Okay Reset: 0_B
VOUT_ST	5	r	**State of output shut-down** 1_D Pending 0_D Done Reset: 0_B
SOTO_EVT	4	r	**State of switch-off timeout (switch-off monitoring)** 1_D Timeout occurred 0_D Okay Reset: 0_B
OTW_EVT	3	r	**State of over temperature** 1_D Warning event 0_D Okay Reset: 0_B
OTP_EVT	2	r	**State of hardware over temperature** 1_D Fault event 0_D Okay Reset: 0_B

(table continues...)

(continued)

Field	Bits	Type	Description
D2_EVT	1	r	**Indicator of DESAT2** 1_D Event limit triggered (**D2CNTLIM** > 0 and **D2ECNT** = **D2CNTLIM**) 0_D Events below limit (**D2CNTLIM** = 0 or **D2ECNT** < **D2CNTLIM**) Reset: 0_B
D1_EVT	0	r	**Indicator of DESAT1** 1_D Event triggered 0_D No event Reset: 0_B

4.2.6 PINSTAT: Status of pins

The gate driver IC monitors the status of the following pins and signals in the register **PINSTAT**:

- .TLTO_LVL: a level compare of the *OFF* pin voltage and the configured **TLTOC1** .TLTO_V TLTOff plateau voltage
- .OFF_PIN: a level compare of the *OFF* pin voltage and the *VCC2* - 2 V reference voltage
- .ON_PIN: a level compare of the *ON* pin voltage and the *VEE2* + 2 V reference voltage
- .PWM_IN: a logic level evaluation of the *IN* pin
- .RDYC: a logic level evaluation of the *RDYC* pin
- .FLT_N: a logic level evaluation of the *FLT_N* pin

This information can be used for redundancy and signal integrity tests, e.g. applying a signal to *IN* and reading it back via serial bus register.

The monitoring function of the output pins *ON*/*OFF* is active during their inactive state of gate driving. The gate driver voltage monitoring provides the actual gate driver voltage compare state at the time of reading. The gate driver voltage used for comparison is filtered using the filter time for clamp and pin status monitoring configured in register **CLCFG** .

PINSTAT Address: $02B_H$

Status of pins Reset Value: 24_H

7	6	5	4	3	2	1	0
res		**FLT_N**	**RDYC**	**PWM_IN**	**ON_PIN**	**OFF_PIN**	**TLTO_LVL**
none		r	r	r	r	r	r

Field	Bits	Type	Description
res	7:6	none	Reset: 00_B
FLT_N	5	r	**State of *FLT_N* pin** 1_D high 0_D low Reset: 1_B
RDYC	4	r	**State of *RDYC* pin** 1_D high 0_D low Reset: 0_B

(table continues...)

(continued)

Field	Bits	Type	Description
PWM_IN	3	r	**State of PWM *IN* pin** 1_D high 0_D low Reset: 0_B
ON_PIN	2	r	**State of *ON* pin** 1_D Below *VEE2* + 2 V 0_D Above *VEE2* + 2 V or output on Reset: 1_B
OFF_PIN	1	r	**State of *OFF* pin** 1_D Above *VCC2* - 2 V 0_D Below *VCC2* - 2 V or output off Reset: 0_B
TLTO_LVL	0	r	***OFF* in comparison to the TLTOff level** 1_D Above TLTOff level 0_D Below TLTOff level Reset: 0_B

4.2.7 COMERRST: Status of input to output communication

The register **COMERRST** indicates the status of the internal signal transmission.

COMERRST Address: $02C_H$

Status of input to output communication Reset Value: 00_H

7	6	5	4	3	2	1	0
res			**PCT_COM**	**CRC_SEC**	**CRC_PRI**	**CRC_COM**	**DCT_COM**
none			r	r	r	r	r

Field	Bits	Type	Description
res	7:5	none	Reset: 000_B
PCT_COM	4	r	**State of PWM communication** 1_D Error 0_D Okay, Reset: 0_B
CRC_SEC	3	r	**Internal CRC check of output side** 1_D Error 0_D Okay Reset: 0_B
CRC_PRI	2	r	**Internal CRC check of input side** 1_D Error 0_D Okay Reset: 0_B

(table continues...)

(continued)

Field	Bits	Type	Description
CRC_COM	1	r	**CRC check of input and output registers** 1_D Error 0_D Okay Reset: 0_B
DCT_COM	0	r	**State of data communication** 1_D Error 0_D Okay Reset: 0_B

4.2.8 CHIPSTAT: Logic status of gate driver

CHIPSTAT Address: $02D_H$

Logic status of gate driver IC Reset Value: 00_H

7	6	5	4	3	2	1	0
res				**CONFIG**	**res**		**ACTIVE**
none				r	none		r

Field	Bits	Type	Description
res	7:4	none	Reset: 0000_B
CONFIG	3	r	**Input side gate driver registers configured** 1_D Yes 0_D No Reset: 0_B
res	2:1	none	Reset: 00_B
ACTIVE	0	r	**Gate driver is in normal operation state (active)** 1_D Yes 0_D No Reset: 0_B

4.2.9 EVTSTICK: Event indicator (sticky bits)

The bits defined in the register **EVTSTICK** signal the event state for:

- PWM communication ignored
  Bit is set if the output side is currently handling a fault or not ready event while the input side is trying to send a PWM update signal. It highlights, that the output side intentionally ignores any incoming PWM signal until the fault or not ready event reaction is completed.
- CRC error detected
  Bit is set if a parameter mismatch between input and output side is detected. Re-configure all configuration registers to ensure consistent operation.
- Data communication error
  Bit is set if the communication between input and output side was interrupted by a higher priority data transmission.
- Gate driver restore

Bit is set if the gate driver IC performed a restoration of configuration registers from input to output side.

- Gate driver recovery
  Bit is set if the gate driver IC performed a recovery of configuration registers from output to input side.
- Low level of *RDYC*
  Bit is set if the gate driver IC detected a low level of the *RDYC* pin.
- Low level of *FLT_N*
  Bit is set if the gate dirver IC detected a low level of the *FLT_N* pin.

Gate driver events set sticky bits to 1_D.

EVTSTICK Address: $02E_H$

Event indicator (sticky bits) Reset Value: 00_H

7	6	5	4	3	2	1	0
res	**SPCTCOM**	**SCRCANY**	**SDCTCOM**	**SRESTORE**	**SRECOVER**	**SNRDY**	**SFAULT**
none	r	r	r	r	r	r	r

Field	Bits	Type	Description
res	7	none	Reset: 0_B
SPCTCOM	6	r	**PWM communication ignored** 1_D Yes 0_D No Reset: 0_B
SCRCANY	5	r	**CRC error detected** 1_D Yes 0_D No Reset: 0_B
SDCTCOM	4	r	**Data communication error detected** 1_D Yes 0_D No Reset: 0_B
SRESTORE	3	r	**Gate driver performed a restore** 1_D Yes 0_D No Reset: 0_B
SRECOVER	2	r	**Gate driver performed a recover** 1_D Yes 0_D No Reset: 0_B
SNRDY	1	r	**Low level of RDYC detected** 1_D Yes 0_D No Reset: 0_B

(table continues...)

(continued)

Field	Bits	Type	Description
SFAULT	0	r	**Low level of FLT_N detected** 1_D Yes 0_D No Reset: 0_B

4.2.10 UV1FCNT: Counter of unfiltered *VCC1* UVLO events

The *VCC1* UVLO event counter is a 8 bit counter without overflow. The counter stops counting at FF_H. The number of counted events is stored in the register **UV1FCNT**.UV1F_CNT. The counter is summing up the unfiltered *VCC1* UVLO events. The counter value is an indicator for the *VCC1* power supply stability.

The register can be cleared using the register bit **CLEARREG** .UV1F_CL. The status does not influence the *RDYC* output.

UV1FCNT Address: $02F_H$

Counter of unfiltered *VCC1* UVLO events Reset Value: 00_H

7	6	5	4	3	2	1	0
UV1F_CNT							
r							

Field	Bits	Type	Description
UV1F_CNT	7:0	r	**Counter of unfiltered VCC1 UVLO events** Reset: 00_H

4.2.11 UV2FCNT: Counter of unfiltered *VCC2* UVLO events

The *VCC2* UVLO event counter is a 8 bit counter without overflow. The counter stops counting at FF_H. The number of counted events is stored in the register **UV2FCNT**.UV2F_CNT. The counter is summing up the unfiltered *VCC2* UVLO events. The counter value is an indicator for the *VCC2* power supply stability.

The register can be cleared using the register bit **CLEARREG** .UV2F_CL. The status does not influence the *RDYC* output.

UV2FCNT Address: 030_H

Counter of unfiltered *VCC2* UVLO events Reset Value: 00_H

7	6	5	4	3	2	1	0
UV2F_CNT							
r							

Field	Bits	Type	Description
UV2F_CNT	7:0	r	**Counter of unfiltered VCC2 UVLO events** Reset: 00_H

4.2.12 D2ECNT: Counter of DESAT2 events

The DESAT2 event counter is a 6 bit counter without overflow. The counter stops counting at $3F_H$. The number of counted events is stored in the register field **D2ECNT**.D2_CNT. The counter is summing up the DESAT2 events after DESAT2 filter time.

The DESAT2 event counter can be cleared using the register bit **CLEARREG** .D2E_CL.

D2ECNT Address: 031_H

Counter of DESAT2 events Reset Value: 00_H

7	6	5	4	3	2	1	0
res		**D2_CNT**					
none		r					

Field	Bits	Type	Description
res	7:6	none	Reset: 00_B
D2_CNT	5:0	r	**Counter of DESAT2 events** Reset: 000000_B

4.2.13 ADCMVDIF: Filtered ADC calculation result of *VCC2* to *GND2*

The positive supply voltage *VCC2* against *GND2* is continuously calculated from the measurement results of *VCC2* to *VEE2* and *GND2* to *VEE2*, if the internal voltage measurements are enabled in register bit **ADCCFG** .VINT_EN.

The calculated voltage is stored as an unsigned 8 bit value in the register **ADCMVDIF**.VCC2GND2 with a maximum range of FF_H = 38.67 V and a resolution of 151.5 mV.

ADCMVDIF Address: 032_H

Filtered ADC calculation result of *VCC2-GND2* Reset Value: 00_H

7	6	5	4	3	2	1	0
VCC2GND2							
r							

Field	Bits	Type	Description
VCC2GND2	7:0	r	**Filtered ADC calculation result of *VCC2-GND2*** 255_D 38.67 V 254_D 38.52 V 253_D 38.37 V ... Steps of 151.5 mV 2_D 0.30 V 1_D 0.15 V 0_D 0 V Reset: 00_H

4.2.14 ADCMGND2: Filtered ADC result of *GND2* to *VEE2*

The negative supply voltage *GND2* against *VEE2* is continuously measured if the internal voltage measurements are enabled in register bit **ADCCFG** .VINT_EN.

The measured voltage is stored as an unsigned 8 bit value in the register **ADCMGND2**.GND2VEE2 with a maximum range of FF_H = 38.67 V and a resolution of 151.5 mV.

ADCMGND2 Address: 033_H

Filtered ADC result of *GND2-VEE2* Reset Value: 00_H

7	6	5	4	3	2	1	0
GND2VEE2							
r							

Field	Bits	Type	Description
GND2VEE2	7:0	r	**Filtered ADC result of *GND2-VEE2*** 255_D 38.67 V 254_D 38.52 V 253_D 38.37 V ... Steps of 151.5 mV 2_D 0.30 V 1_D 0.15 V 0_D 0 V Reset: 00_H

4.2.15 ADCMVCC2: Filtered ADC result of *VCC2* to *VEE2*

The positive supply voltage *VCC2* is continuously measured against *VEE2* if the internal voltage measurements are enabled in register bit **ADCCFG** .VINT_EN.

The measured voltage is stored as an unsigned 8 bit value in the register **ADCMVCC2**.VCC2VEE2 with a maximum range of FF_H = 38.67 V and a resolution of 151.5 mV.

ADCMVCC2 Address: 034_H

Filtered ADC result of *VCC2-VEE2* Reset Value: 00_H

7	6	5	4	3	2	1	0
VCC2VEE2							
r							

Field	Bits	Type	Description
VCC2VEE2	7:0	r	**Filtered ADC result of *VCC2-VEE2*** 255_D 38.67 V 254_D 38.52 V 253_D 38.37 V ... Steps of 151.5 mV 2_D 0.30 V 1_D 0.15 V 0_D 0 V Reset: 00_H

4.2.16 ADCMTEMP: Filtered ADC result of gate driver temperature

The junction temperature Tj is continuously measured at the secondary side of the gate driver IC.

The measured temperature is stored as an unsigned 8 bit value in the register **ADCMTEMP**.TJ_OUT with a resolution of 3.21°C and the following reference points:

- 84_H = 150°C
- 49_H = -40°C

ADCMTEMP Address: 035_H

Filtered ADC result of gate driver temperature Reset Value: 00_H

7	6	5	4	3	2	1	0
TJ_OUT							
r							

Field	Bits	Type	Description
TJ_OUT	7:0	r	**Filtered ADC result of gate driver temperature** 132_D 150°C 131_D 147°C ... Steps of 3.21°C 85_D 0°C ... Steps of 3.21°C 74_D -37°C 73_D -40°C 72_D and below decreases in steps of 3.21°C (not verified) Reset: 00_H

4.2.17 ADCMVEXT: Filtered ADC result of *CLAMP* to *VEE2*

The positive external voltage at *CLAMP* pin is continuously measured against *VEE2* if external sensor voltage measurement is enabled in register bit **ADCCFG** .VEXT_EN. Disable the Miller clamp function to prevent impact on measurement (**CLCFG** .CL_DIS = 1_B)

The measured voltage is stored as an unsigned 8 bit value in the register **ADCMVEXT**.VEXTVEE2 with a maximum range of FF_H = 2.86 V and a resolution of 11.2 mV. Voltages above maximum range will lead to a result value of FF_H but will not harm the ADC.

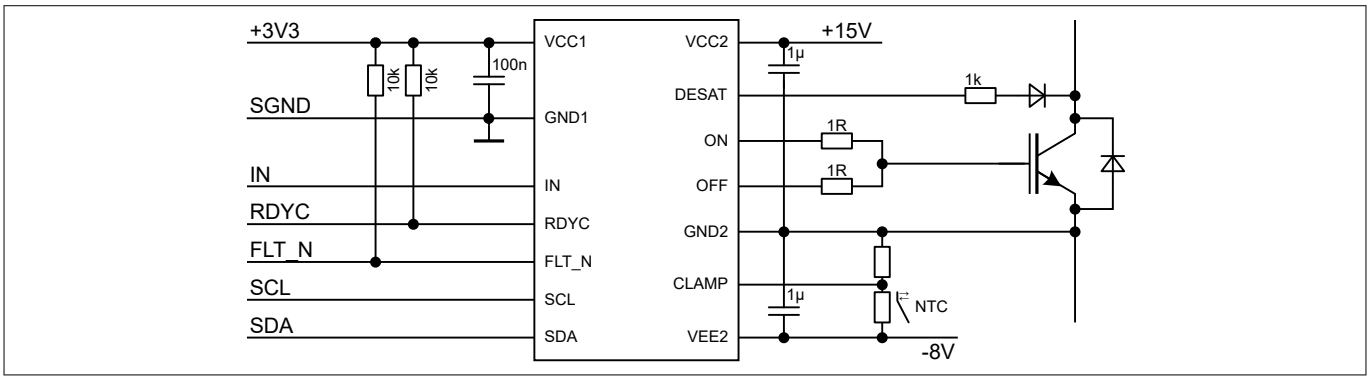

Figure 55 Application example with NTC measurement

This function is used for indirect temperature measurement of an external NTC voltage typically located in the power module. The external NTC operates as a voltage divider between *GND2* (or *VCC2*) and *VEE2* using an additional resistor.

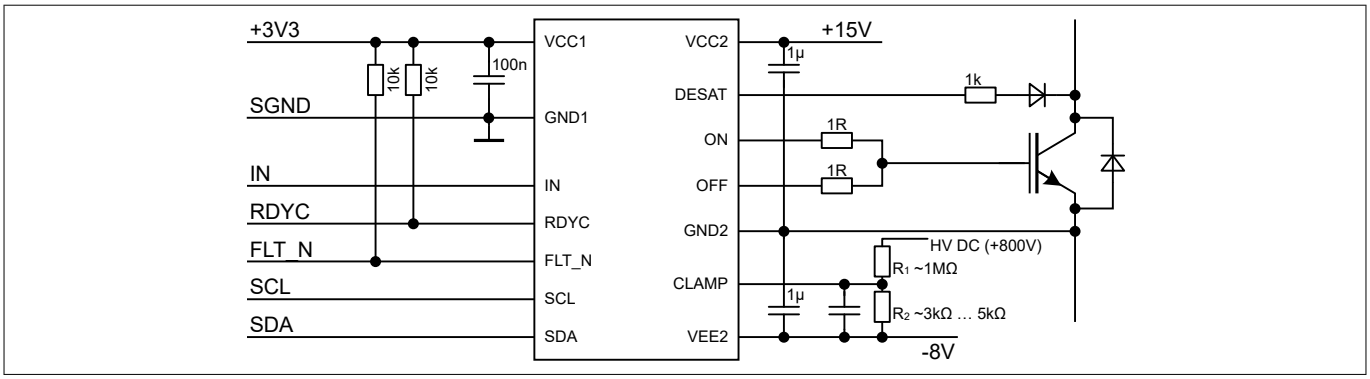

Figure 56 Application example with external voltage measurement

This function is used for voltage measurement of an external supply voltage. The external voltage is connected via a voltage divider referenced to *VEE2*. A voltage referenced to *GND2* needs to be calculated by the reading microcontroller using the value in register **ADCMGND2** .GND2VEE2.

ADCMVEXT Address: 036_H

Filtered ADC result of *CLAMP-VEE2* Reset Value: 00_H

7	6	5	4	3	2	1	0
VEXTVEE2							
r							

Field	Bits	Type	Description
VEXTVEE2	7:0	r	**Filtered ADC result of CLAMP-VEE2** 255_D 2.86 V 254_D 2.85 V 253_D 2.84 V ... Steps of 11.2 mV 2_D 0.03 V 1_D 0.01 V 0_D 0 V Reset: 00_H

5 Application notes

5.1 Reference layout for thermal data

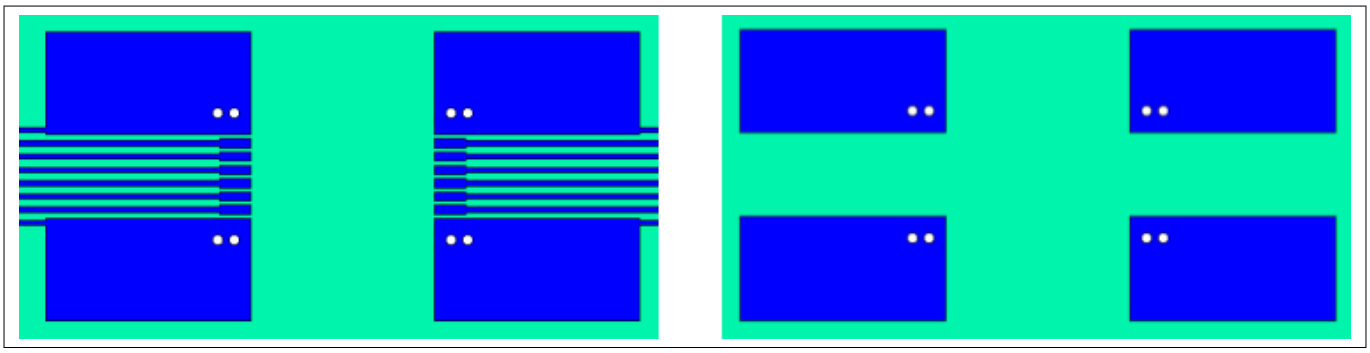

Figure 57 Reference layout for thermal data (Two layer PCB; copper thickness 35 µm; left: top layer; right: bottom layer)

The PCB layout represents the reference layout used for the thermal characterization. Pins 1 and 8 (*GND1*) and pins 9 and 16 (*VEE2*) require ground plane connections for achieving maximum power dissipation. The 1ED38x0Mc12M family (X3 Digital) is conceived to dissipate most of the heat generated through these pins.

5.2 Printed circuit board guidelines

Following factors should be taken into account for an optimum PCB layout.

- Sufficient spacing should be kept between high voltage isolated side and low voltage side circuits.
- The same minimum distance between two adjacent high-side isolated parts of the PCB should be maintained to increase the effective isolation and reduce parasitic coupling.
- In order to ensure low supply ripple and clean switching signals, bypass capacitor trace lengths should be kept as short as possible.

Revision history

Revision history

Reference	Description
v2.1 (2021-02-15)	• Product links and certification information update • Feature description improvements
(2021-09-01)	New version number schema: Target/Preliminary manual: 0.XY; Final manual: 1.XY
1.10 (2021-10-08)	• Related product list update • VDE certification number
1.20 (2026-04-10)	• Related product list update • Harmonization of technical terms

Trademarks

All referenced product or service names and trademarks are the property of their respective owners.

Edition 2026-04-10

Published by

Infineon Technologies AG

81726 Munich, Germany

© 2026 Infineon Technologies AG

All Rights Reserved.

Do you have a question about any aspect of this document?

Email: erratum@infineon.com

Document reference
IFX-yov1584083321530

Important notice

The information given in this document shall in no event be regarded as a guarantee of conditions or characteristics ("Beschaffenheitsgarantie").

With respect to any examples, hints or any typical values stated herein and/or any information regarding the application of the product, Infineon Technologies hereby disclaims any and all warranties and liabilities of any kind, including without limitation warranties of non-infringement of intellectual property rights of any third party.

In addition, any information given in this document is subject to customer's compliance with its obligations stated in this document and any applicable legal requirements, norms and standards concerning customer's products and any use of the product of Infineon Technologies in customer's applications.

The data contained in this document is exclusively intended for technically trained staff. It is the responsibility of customer's technical departments to evaluate the suitability of the product for the intended application and the completeness of the product information given in this document with respect to such application.

Warnings

Due to technical requirements products may contain dangerous substances. For information on the types in question please contact your nearest Infineon Technologies office.

Except as otherwise explicitly approved by Infineon Technologies in a written document signed by authorized representatives of Infineon Technologies, Infineon Technologies' products may not be used in any applications where a failure of the product or any consequences of the use thereof can reasonably be expected to result in personal injury.