650V Rapid Diode for Industrial Applications

Application Note

About this document

Scope and purpose

This document introduces the Rapid Diodes, high voltage hyperfast silicon diodes from Infineon. Based on ultra-thin wafer technology, two families of Rapid Diodes are released to cover different target application requirements. This application note is designed to show how the Rapid Diode improves existing system solutions in terms of system efficiency.

Intended audience

Design engineers who want to improve their system for reliability and efficiency

Table of Contents

1 Description of Technology and Product Family 2
1.1 V_F - Q_{rr} Rapid Diode Trade-off 2
1.2 Relative Variation of Switching Parameters as a Function of Temperature 3

2 Application of Rapid Diodes 4
2.1 Rapid 1 Diode Static and Dynamic Performance 5
2.2 Maximum Power Dissipation 6
2.3 Rapid 2 Diode PFC Efficiency Tests 7
2.3.1 Diode Reverse Recovery and PFC Efficiency Result 7
2.3.2 Rapid 2 Diodes Electrical Parameter Stability 8

3 Portfolio 9

4 Summary 10

5 References 11

6 Revision History 12

1 Description of Technology and Product Family

Rapid Diodes are based on ultrathin wafer technology, where wafer thickness and doping profile are optimized to achieve:

- Very low and temperature stable forward voltage (V_F)
- Low reverse recovery charge (Q_{rr})
- Low peak reverse recovery current (I_{rrm})
- Soft reverse recovery

Two families are available. Rapid 1 Diode is optimized to have the lowest V_F while Rapid 2 Diode is designed for low Q_{rr} and I_{rrm}. Both families are rated at a blocking voltage of 650V.

1.1 V_F - Q_{rr} Rapid Diode Trade-off

Rapid Diodes are P-i-N diodes that are categorized via a trade-off curve of V_F versus Q_{rr}. This trade-off is determined by the plasma of excess charge carriers injected into the drift region of the diode. For Rapid 1 Diode, plasma concentration is increased thus the forward voltage V_F in conduction mode is reduced. Consequently, more charge carriers are present within the device during forward conduction. Once reverse voltage is applied to the device, this excess charge has to be removed first before a voltage can be blocked. Hence a trade-off exists between V_F and Q_{rr} as displayed in Figure 1.

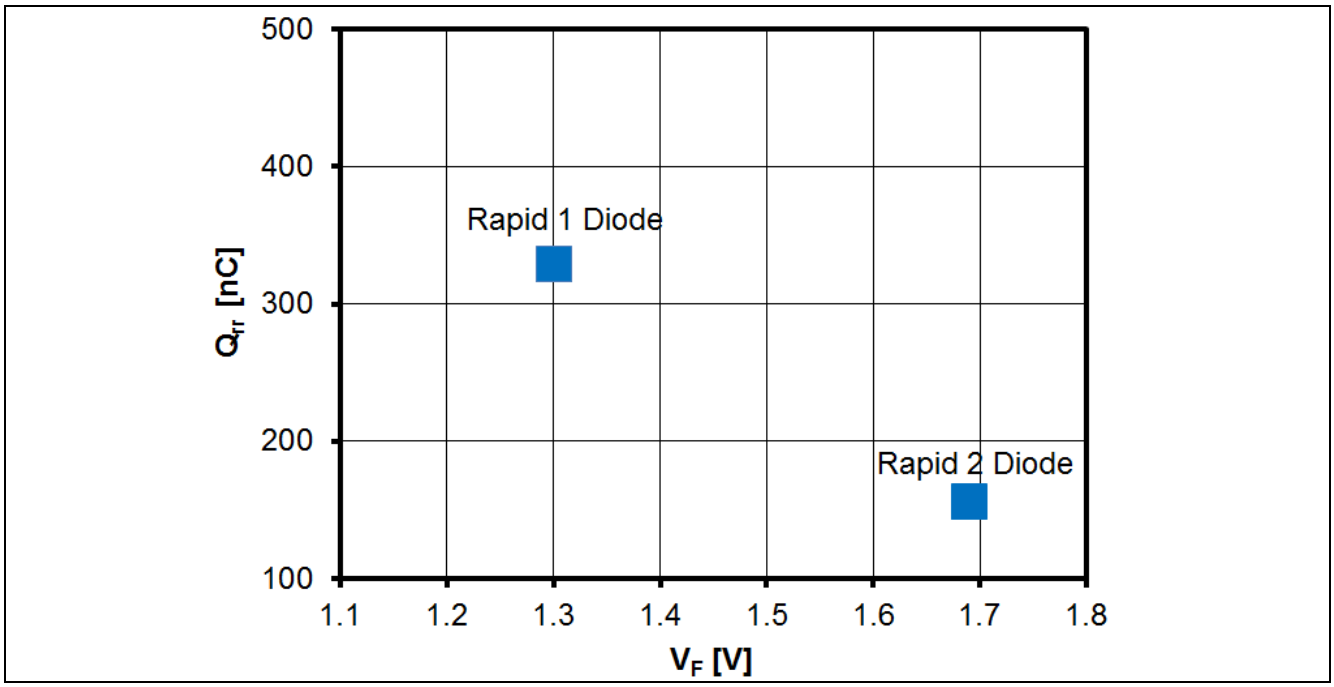

Figure 1 V_F - Q_{rr} Trade-off for the 8A Rapid 1 Diode with di_F/dt = 200A/ s and 8A Rapid 2 Diode with di_F/dt = 300A/s at 125°C T_j

1.2 Relative Variation of Switching Parameters as a Function of Temperature

Rapid technology has temperature stable electrical parameters due to relatively light life time killing on the float zone starting material. Compared to a diode with epitaxial starting material, Table 1 indicates the low deviation of Rapid 2 Diode's dynamic parameters at varying temperature conditions.

Table 1 Relative Variation of Switching Parameters as a Function of Temperature

Device	Relative Value at T_C = 125°C		
	t_{rr}	Q_{rr}	I_{rrm}
Rapid 2 Diode	= 0.9 x t_{rr}_25°C	= 2.2 x Q_{rr}_25°C	= 1.5 x I_{rrm} _25°C
Compare Product	n.a.	= 4.0 x Q_{rr} _ 25°C	= 2.5 x I_{rrm} _25°C

2 Application of Rapid Diodes

The major application Rapid Diodes are used in is their utilization as boost diode in power factor correction circuits (PFC). Depending on its application requirements, PFC can be operated at a low switching frequency of 18kHz up to a high switching frequency of >100kHz. Devices with low conduction losses are essential on applications with 18kHz to 40kHz PFC switching frequency, thus Rapid 1 Diode is preferred.

To meet high power density and efficiency requirements typical to server and telecom applications, a PFC operating at a high switching frequency will require smaller magnetic components. 60kHz to 100kHz switching frequency is typical for a silicon diode. To meet high efficiency requirements, a diode with low Q_{rr} and I_{rrm} is preferred to minimize the turn-on losses in the PFC's switch. The Rapid 2 Diode is a perfect fit in these applications. Table 2 lists the target applications for the Rapid Diodes.

Table 2 Rapid Diode Target Applications

Device	IF [A]	Target Application					
		Home Appliance	UPS	Welding	PC Power/ LED/LCD TV	Server	Telecom
Rapid 1 Diode	8	-	-	-	IDP08E65D1	-	-
	15	-	-	-	IDP15E65D1	-	-
	20	IDV20E65D1	-	-	-	-	-
	30	IDW30E65D1	IDP30E65D1	-	-	-	-
	40	-	IDW40E65D1	-	-	-	-
Rapid 2 Diode	8	-	IDP08E65D2 IDV08E65D2	IDP08E65D2 IDV08E65D2	IDP08E65D2 IDV08E65D2	IDP08E65D2 IDV08E65D2	
	15	-	IDP15E65D2 IDV15E65D2 IDW15E65D2	IDP15E65D2 IDV15E65D2 IDW15E65D2	-	IDP15E65D2 IDV15E65D2	IDP15E65D2 IDV15E65D2
	20	-	IDP20E65D2	IDP20E65D2	-	IDP20C65D2	IDP20E65D2 IDP20C65D2
	30	IDV30E65D2	IDP30E65D2 IDV30E65D2	IDP30E65D2 IDV30E65D2	-	-	IDP30E65D2 IDV30E65D2 IDP30C65D2
	40	-	-	-	-	-	IDP40E65D2 IDW40E65D2

In the following sections, Rapid Diode static and dynamic characteristics will be compared to other diode technologies commonly found in the market. Rapid 1 Diode is focused more on static performance while Rapid 2 Diode emphasizes on the enhanced switching characteristics. The final results reveal an efficiency improvement over the existing system solution.

2.1 Rapid 1 Diode Static and Dynamic Performance

For a system to run at high efficiency, system power losses have to be minimized. In applications that switch a diode at less than 20kHz, the conduction losses Pcond usually are the major source of diode losses. This contribution can be mathematically expressed to be:

$$P_{cond} = V_F * I_F \quad [1]$$

In this I_F is the current conducted by the diode. Therefore, a diode with lower V_F will have lower conduction losses.

Figure 2 depicts the forward voltage characteristic of a Rapid 1 Diode rated 30A, compared to the same current rated low forward voltage diodes available to the market. At nominal current of 30A, Rapid 1 Diode forward voltage is measured to be 1.39 V at T_j=25 °C. Comparing device A, a measured forward voltage of 1.74V corresponds to a 25% higher value compared to Rapid Diode.

At T_j=100°C, the forward voltage of the Rapid 1 Diode increased by 1.4% while the device A compared to changes by 12 %, device B even changes by almost 18%. This demonstrates the lower dependency of the forward voltage with varying temperature.

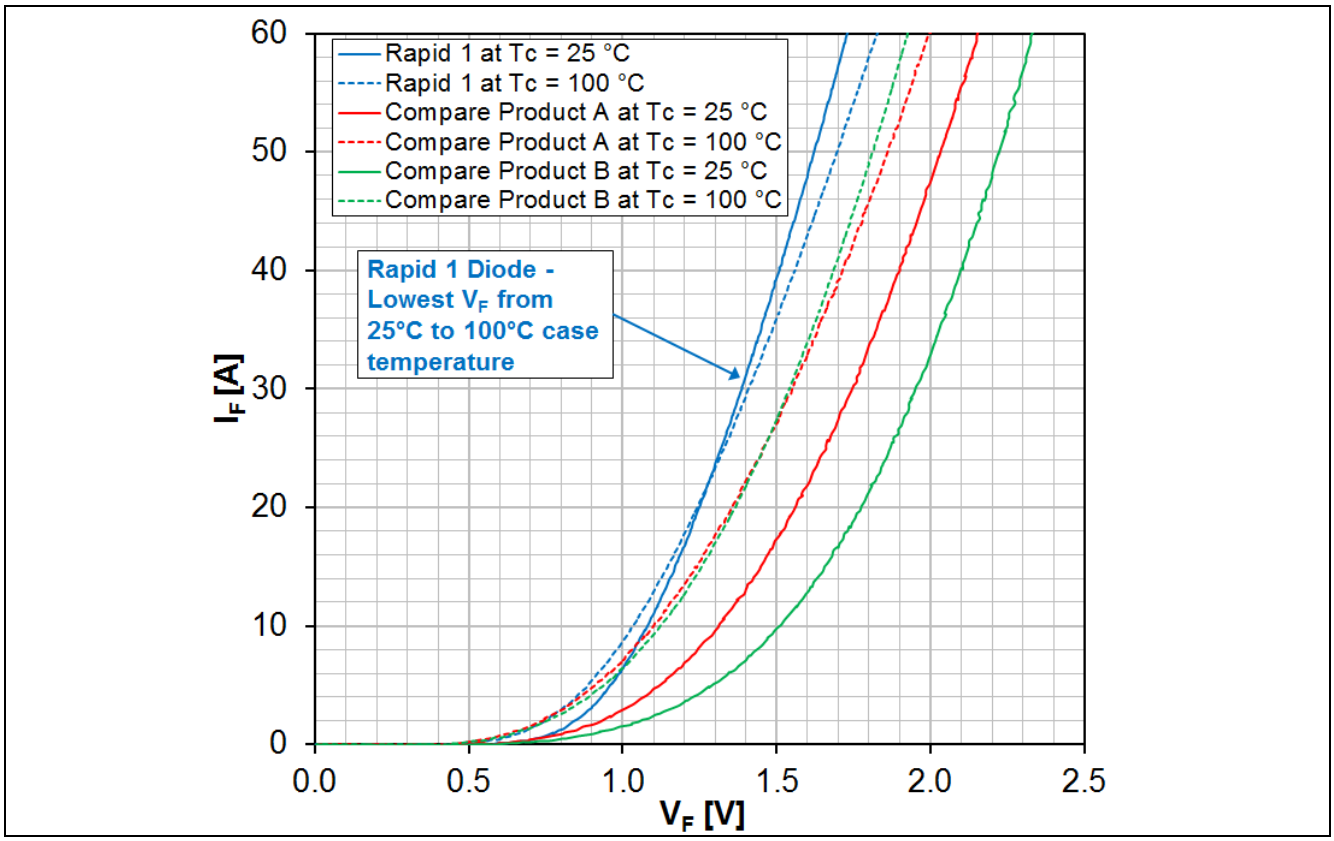

Figure 2 Comparison of forward voltage between Rapid 1 Diode and compare products A and B at 25°C to 100°C Case Temperature

Application of Rapid Diodes

To test the switching performance of these three diodes, a double pulse test fixture is used. The diodes peak reverse recovery current, Q_{rr} and the power switches turn-on losses E_{on} are measured during the second turn-on event. Measurement results of these three diodes are summarized in Table 3, proving that a low peak reverse recovery current diode reduces the IGBT's turn-on losses even at a high Q_{rr}.

Table 3 Measurement of I_{rrm}, Q_{rr} and IGBT's E_{on} at I_D=30 A, T_j=100°C; V_F measured in previous section.

Device	V_F [V]	I_{rrm} [A]	Q_{rr} [nC]	$E_{on,switch}$ [mJ]
Rapid 1 Diode	1.406	14.99	861.2	1.019
Compare Product A	1.550	19.22	712.7	1.016
Compare Product B	1.542	22.74	772.3	1.019

2.2 Maximum Power Dissipation

The maximum power dissipation of a diode is limited by its thermal situation. As the diode dissipates more power, the junction temperature rises. Due to the diode's package thickness, the thermal resistance from junction to case $R_{th(j-c)}$ causes a temperature gradient between the junction and the case of the device. Exceeding the maximum power dissipation at a given case temperature will result in interruption of current flow due to disconnecting bond wires. Figure 3 shows a typical graph of diode forward current as a function of case temperature for IDV20E65D1, a 20 A TO-220 full-pack diode popular in PFC for an inverter air-con.

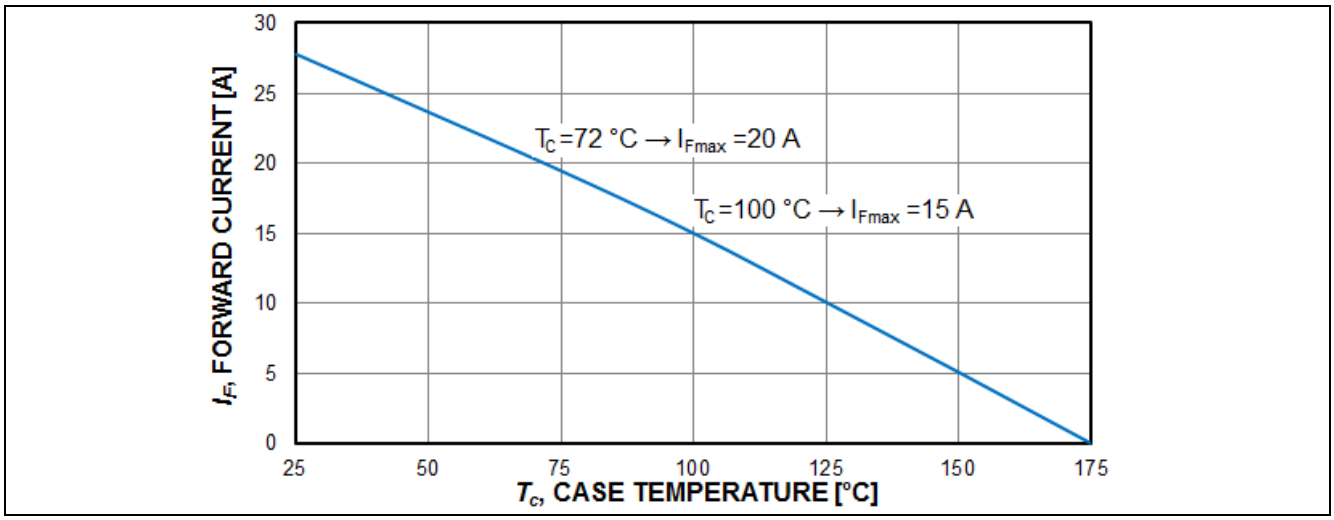

Figure 3 Diode forward current as a function of case temperature (T_j≤175°C) for IDV20E65D1

2.3 Rapid 2 Diode PFC Efficiency Tests

To confirm that Rapid Diodes improve system efficiency compared to existing solutions, tests were conducted on a single channel PFC test board. Figure 4 (a) illustrates the schematic of a single channel PFC. For applications that require lower input/output harmonic current and lower EMI, an interleaved PFC using a boost diode in a common cathode configuration can be used instead, the according schematic is depicted in Figure 4(b).

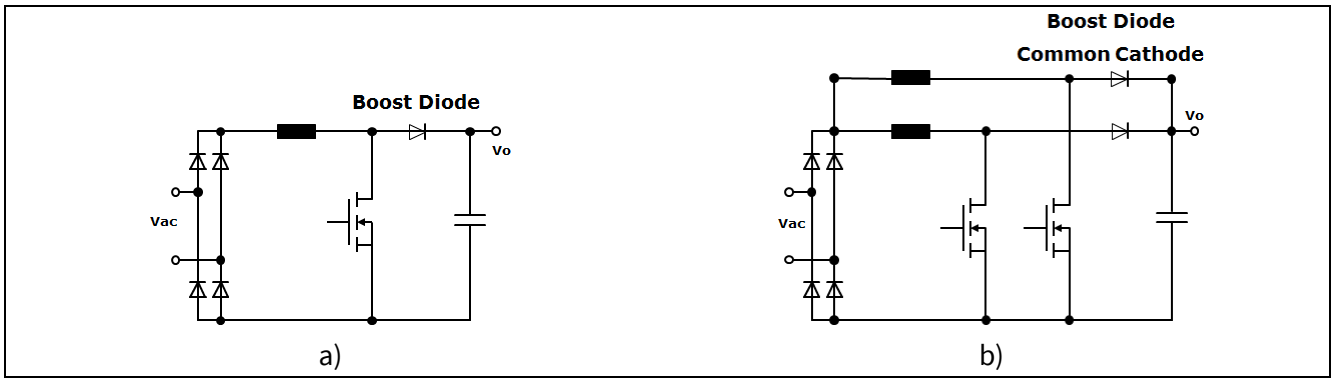

Figure 4 Single Channel and Interleaved PFC Circuits

2.3.1 Diode Reverse Recovery and PFC Efficiency Result

Using a hard switched continuous conduction mode boost PFC as a test platform, the waveforms in Figure 5 show an 8A/650V rated Rapid 2 boost diode reverse recovery event compared to some 8A/600V rated compare products C and D with low Q_{rr}. Initially, the boost diode is conducting 5.6A forward current. After 20ns, the power switch is turned on thus the current flowing to the diode starts to be diverted to the power switch. After 26ns, all boost diode forward current has been commutated to the power switch. Then the boost diode undergoes reverse current conduction at a rate of di_F/dt = 2000 A/µs and then peaks down to I_{rrm} before the current returns back to zero.

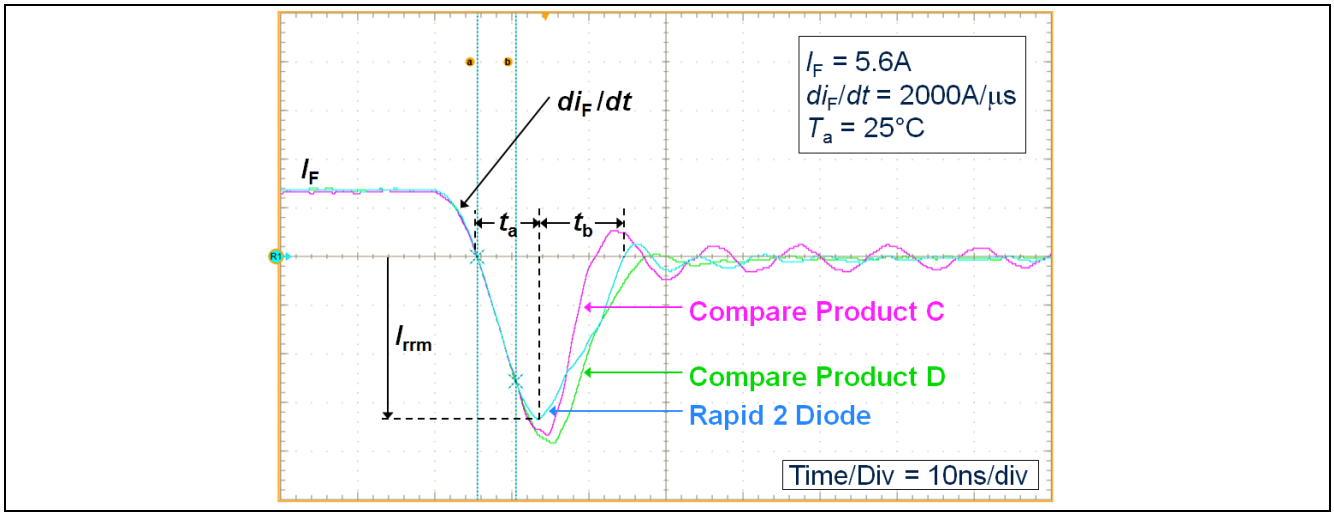

Figure 5 Comparison of Boost Diode Reverse Recovery between Rapid 2 Diode and compare products C and D

Application of Rapid Diodes

As seen in Figure 5, Rapid 2 Diode has the lowest peak reverse recovery current compared to compare products C and D. Soft recovery of Rapid 2 Diode is also visible where t_b is longer than t_a.

The graphs in Figure 6 compare the PFC efficiency using different boost diode at $115V_{AC}$ and $230V_{AC}$ input voltage over the entire load range at 25°C ambient. Having a good compromise between V_F and Q_{rr}, Rapid 2 Diode achieves a higher efficiency from light to mid load while maintaining moderate efficiency at full load, compared to compare products C and D.

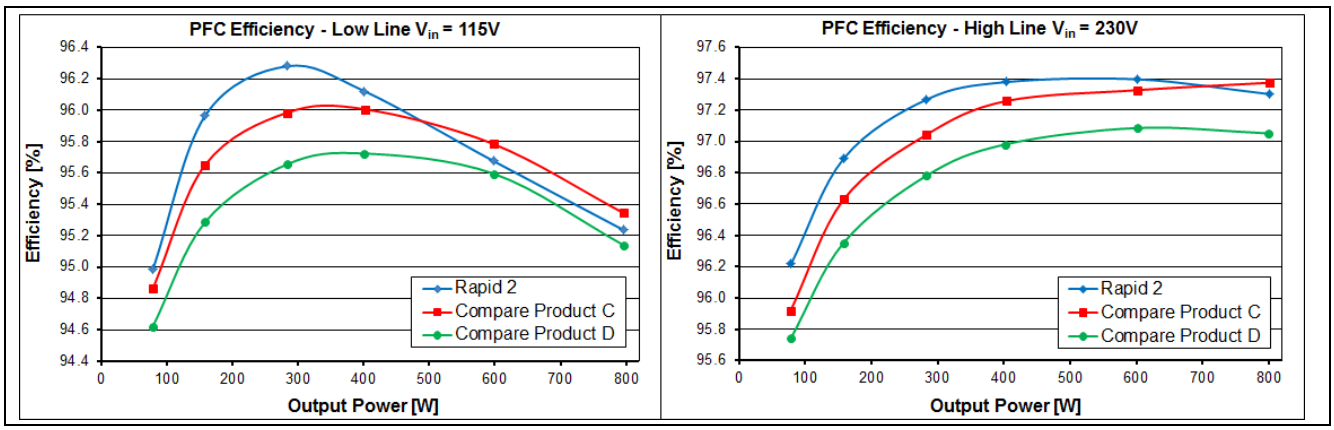

Figure 6 PFC Efficiency vs. Output Power at $115V_{AC}$ and $230V_{AC}$

2.3.2 Rapid 2 Diodes Electrical Parameter Stability

As mentioned in section 1.2, Rapid Diode electrical parameters have a low dependency over temperature. The diode tends to have lower switching losses at increased junction temperature. In Table 4, electrical parameters of Rapid 2 Diodes are compared to compare products C and D.

Table 4 Relative Variation of Switching Parameters as a Function of Temperature

Device	Relative Value at T_C = 125°C		
	t_{rr}	Q_{rr}	I_{rrm}
Rapid 2 Diodes	= 0.9 x t_{rr} _25°C	= 2.2 x Q_{rr} _25°C	= 1.5 x I_{rrm} _25°C
Compare Product C	n.a.	= 4.0 x Q_{rr} _25°C	= 2.5 x I_{rrm} _25°C
Compare Product D	= 2.1 x t_{rr} _25°C	= 3.3 x Q_{rr} _25°C	= 1.5 x I_{rrm} _25°C

Note: All values are extracted from the datasheet. Conditions differ for different devices

3 Portfolio

Rapid Diode product naming includes the package type, the diode's rated current, single or common cathode configuration, the voltage class divided by 10 and diode type "D1" for Rapid 1 Diode and "D2" for Rapid 2 Diode. Table 5 presents the portfolio of Rapid Diodes.

Table 5 Portfolio of Rapid Diodes

					
Device	**IF [A]**	**TO-220 real 2-leg**	**TO-220 FullPAK real 2-leg**	**TO-220-3 Common Cathode**	**TO-247-3**
Rapid Diode 1	**8**	IDP08E65D1			
	15	IDP15E65D1			
	20		IDV20E65D1		
	30	IDP30E65D1			IDW30E65D1
	40				IDW40E65D1
Rapid Diode 2	**8**	IDP08E65D2	IDV08E65D2		
	15	IDP15E65D2	IDV15E65D2		IDW15E65D2
	20	IDP20E65D2		IDP20C65D2	
	30	IDP30E65D2	IDV30E65D2	IDP30C65D2	
	40	IDP40E65D2			IDW40E65D2

4 Summary

With the Rapid Diodes, Infineon brings thin wafer technology expertise to offer outstanding performance. Rapid Diodes' low forward voltage and peak reverse recovery current further increases PFC efficiency compared to existing solutions. Moreover, ruggedness of the device is higher by having a DC blocking voltage of 650V and soft recovery characteristics.

5 References

[1] “Fast IGBT and Diode technologies achieve Platinum Efficiency Standard in commercial SMPS applications”; Davide Chiola, Erich Griebl, APEC 2013

[2] Rapid Diodes datasheets. Available in internet: http://www.infineon.com/rapiddiodes

6 Revision History

Major changes since the last revision

Page or Reference	Description of change
Document	Text content and layout
Pages 4,7 and 9	Included common cathode devices
Page 6	Included “Maximum Power Dissipation” description

Trademarks of Infineon Technologies AG

AURIX™, C166™, CanPAK™, CIPOS™, CIPURSE™, CoolMOS™, CoolSET™, CORECONTROL™, CROSSAVE™, DAVE™, DI-POL™, EasyPIM™, EconoBRIDGE™, EconoDUAL™, EconoPIM™, EconoPACK™, EiceDRIVER™, eupec™, FCOS™, HITFET™, HybridPACK™, I²RF™, ISOFACE™, IsoPACK™, MIPAQ™, ModSTACK™, my-d™, NovalithIC™, OptiMOS™, ORIGA™, POWERCODE™, PRIMARION™, PrimePACK™, PrimeSTACK™, PRO-SIL™, PROFET™, RASIC™, ReverSave™, SatRIC™, SIEGET™, SINDRION™, SIPMOS™, SmartLEWIS™, SOLID FLASH™, TEMPFET™, thinQ!™, TRENCHSTOP™, TriCore™.

Other Trademarks

Advance Design System™ (ADS) of Agilent Technologies, AMBA™, ARM™, MULTI-ICE™, KEIL™, PRIMECELL™, REALVIEW™, THUMB™, µVision™ of ARM Limited, UK. AUTOSAR™ is licensed by AUTOSAR development partnership. Bluetooth™ of Bluetooth SIG Inc. CAT-iq™ of DECT Forum. COLOSSUS™, FirstGPS™ of Trimble Navigation Ltd. EMV™ of EMVCo, LLC (Visa Holdings Inc.). EPCOS™ of Epcos AG. FLEXGO™ of Microsoft Corporation. FlexRay™ is licensed by FlexRay Consortium. HYPERTERMINAL™ of Hilgraeve Incorporated. IEC™ of Commission Electrotechnique Internationale. IrDA™ of Infrared Data Association Corporation. ISO™ of INTERNATIONAL ORGANIZATION FOR STANDARDIZATION. MATLAB™ of MathWorks, Inc. MAXIM™ of Maxim Integrated Products, Inc. MICROTEC™, NUCLEUS™ of Mentor Graphics Corporation. MIPI™ of MIPI Alliance, Inc. MIPS™ of MIPS Technologies, Inc., USA. muRata™ of MURATA MANUFACTURING CO., MICROWAVE OFFICE™ (MWO) of Applied Wave Research Inc., OmniVision™ of OmniVision Technologies, Inc. Openwave™ Openwave Systems Inc. RED HAT™ Red Hat, Inc. RFMD™ RF Micro Devices, Inc. SIRIUS™ of Sirius Satellite Radio Inc. SOLARIS™ of Sun Microsystems, Inc. SPANSION™ of Spansion LLC Ltd. Symbian™ of Symbian Software Limited. TAIYO YUDEN™ of Taiyo Yuden Co. TEAKLITE™ of CEVA, Inc. TEKTRONIX™ of Tektronix Inc. TOKO™ of TOKO KABUSHIKI KAISHA TA. UNIX™ of X/Open Company Limited. VERILOG™, PALLADIUM™ of Cadence Design Systems, Inc. VLYNQ™ of Texas Instruments Incorporated. VXWORKS™, WIND RIVER™ of WIND RIVER SYSTEMS, INC. ZETEX™ of Diodes Zetex Limited.

Last Trademarks Update 2011-11-11

www.infineon.com

Edition 2014-07-17

Published by

Infineon Technologies AG

81726 Munich, Germany

© 2014 Infineon Technologies AG. All Rights Reserved.

Do you have a question about any aspect of this document?

Email: erratum@infineon.com

Document reference

ifx000000000001

Legal Disclaimer

THE INFORMATION GIVEN IN THIS APPLICATION NOTE (INCLUDING BUT NOT LIMITED TO CONTENTS OF REFERENCED WEBSITES) IS GIVEN AS A HINT FOR THE IMPLEMENTATION OF THE INFINEON TECHNOLOGIES COMPONENT ONLY AND SHALL NOT BE REGARDED AS ANY DESCRIPTION OR WARRANTY OF A CERTAIN FUNCTIONALITY, CONDITION OR QUALITY OF THE INFINEON TECHNOLOGIES COMPONENT. THE RECIPIENT OF THIS APPLICATION NOTE MUST VERIFY ANY FUNCTION DESCRIBED HEREIN IN THE REAL APPLICATION. INFINEON TECHNOLOGIES HEREBY DISCLAIMS ANY AND ALL WARRANTIES AND LIABILITIES OF ANY KIND (INCLUDING WITHOUT LIMITATION WARRANTIES OF NON-INFRINGEMENT OF INTELLECTUAL PROPERTY RIGHTS OF ANY THIRD PARTY) WITH RESPECT TO ANY AND ALL INFORMATION GIVEN IN THIS APPLICATION NOTE.

Information

For further information on technology, delivery terms and conditions and prices, please contact the nearest Infineon Technologies Office (**www.infineon.com**).

Warnings

Due to technical requirements, components may contain dangerous substances. For information on the types in question, please contact the nearest Infineon Technologies Office. Infineon Technologies components may be used in life-support devices or systems only with the express written approval of Infineon Technologies, if a failure of such components can reasonably be expected to cause the failure of that life-support device or system or to affect the safety or effectiveness of that device or system. Life support devices or systems are intended to be implanted in the human body or to support and/or maintain and sustain and/or protect human life. If they fail, it is reasonable to assume that the health of the user or other persons may be endangered.