QUICK START GUIDE

EVAL_AUDIO_MA12070P

Class D Audio Team

March 2019

Product overview and features

Overview

The demonstration board EVAL_AUDIO_MA12070P is an evaluation and demonstration board for MERUS™ audio MA12070P. It contains a digital input and a variety of output and setup/selection features. It also contains two on-board power supply generators (5 V and 3.3 V buck-converted) so only one external power supply (PVDD) is necessary. The board can be used for evaluating or demonstrating key features/advantages of the MERUS™ technology:

- Energy efficiency: Power losses at typical audio listening levels / Idle power loss
- Adaptive power management system
- Minimum output filter components: Significant cost and size reduction
- THD performance and audio quality

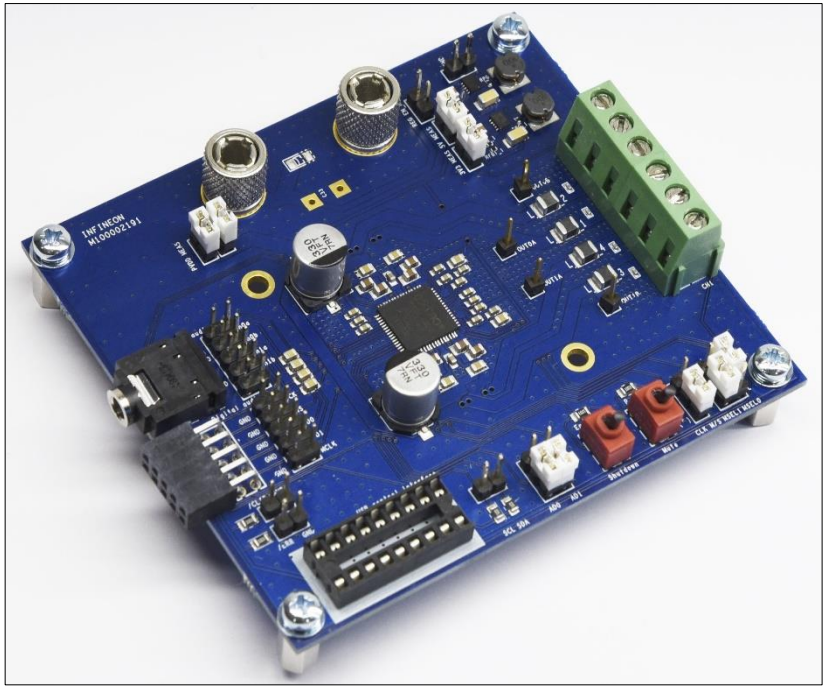

Figure 1. Overview of EVAL_AUDIO_MA12070P evaluation board

General features and audio performance

Number of audio channels	2xBTL, 1xPBTL, 1xBTL+2xSE
Audio input format	Digital (I2S)
Amplifier gain	20 dB / configurable 26dB
Supply voltage	26 V
Output noise level	<150 uVrms(AW)
Dynamic range	>95 dB
Idle consumption @ PVDD=18V	<19 mA
Crosstalk	<-85 dB
Efficiency, full-scale, 8 ohm	91%

Copyright © Infineon Technologies AG 2019. All rights reserved.

Board description

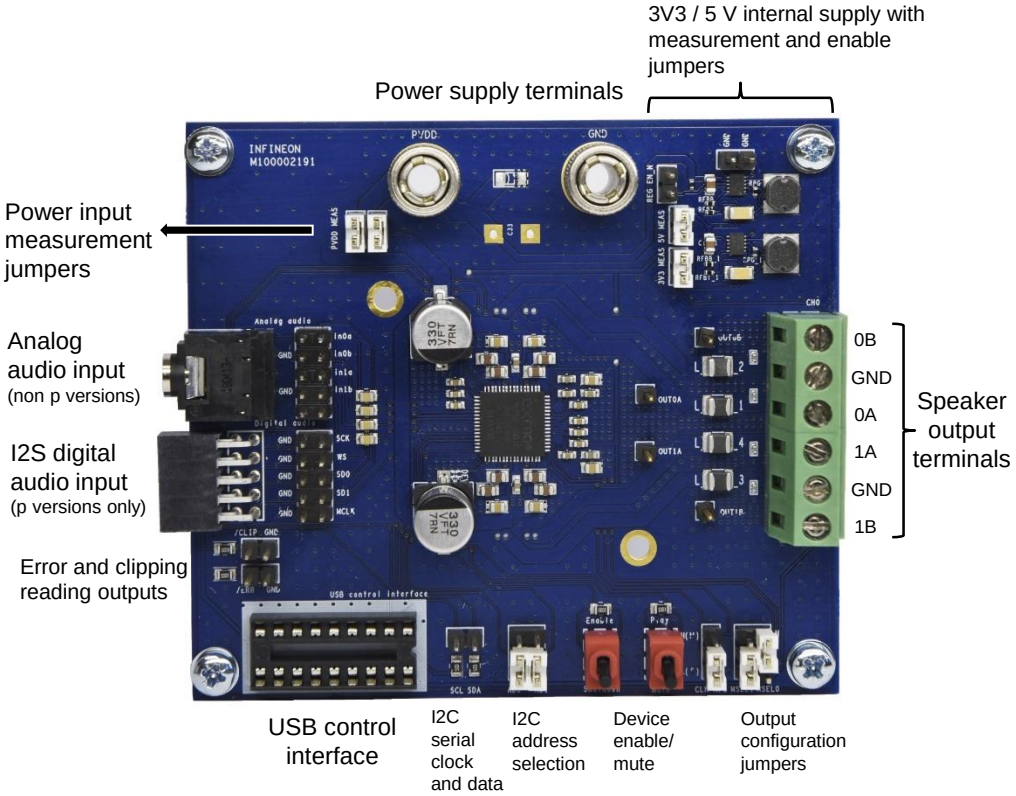

Figure 2. Top board view of EVAL_AUDIO_MA12070P

> Recommended operation conditions

Parameter	Part Nr	Minimum	Nominal	Maximum	Unit
PVDD	MA12070p	5.5		26	V
Output peak current	MA12070p			6.0	A

> Typical audio and electrical specifications

(BTL default configuration; Power Mode Profile = 0)

Parameter	Conditions	Typ	Unit
Output power p/channel (peak)	THD+N = 10%, RL = 4 Ω, f = 1 kHz	80	W
Output power p/channel (peak)	THD+N = 10%, RL = 8 Ω, f = 1 kHz	45	W
Total harmonic distortion + noise	1kHz, POUT = 1W, RL = 4 Ω	0.013	%
Total harmonic distortion + noise	1kHz, POUT = 20W, RL = 4 Ω	0.014	%
Efficiency*	POUT = 2×80 W, 4 Ω , PMP = 0	87	%
Efficiency*	POUT = 2×40 W, 8 Ω , PMP = 0	91	%

* Efficiency values do not take into account the 5 V and 3V3 board power supplies' consumption.

Copyright © Infineon Technologies AG 2019. All rights reserved.

Default configuration for a quick start

Slides 4 and 5 describe the start up and quick start operation procedures with the following configuration:

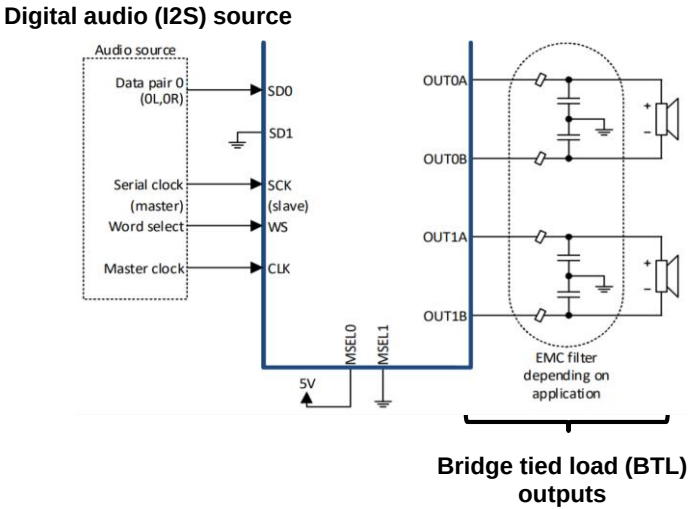

Figure 3. Bridge tied load (BTL) configuration with digital audio inputs for MA12070P

Verify that the jumpers are set in the following positions:

Jumper	State	Picture
MSEL0	H	
MSEL1	L	
CLK M/S	L(S)	
AD0 & AD1	L	
Analog audio	Do not Jumper	
Digital audio	Do not Jumper. Use individual pins for I2S input	
PVDD MEAS	Jumpered	
3V3 & 5V MEAS	Jumpered	
REG EN_N	Do not Jumper	

Note: Please refer to the manual for other input/output configurations.

Copyright © Infineon Technologies AG 2019. All rights reserved.

Power and start-up procedure

The following slides describe the power up procedure and its software tool setup. This will allow to monitor and configure the power mode profiles. In addition, I2S and digital audio processing parameters can be configured. Power mode profile 0 is configured by default.

1. Before connecting any source or load (speaker) make sure all of them are turned off.

2. Open your web browser and download the USB control interface drivers from the following Link. Press “setup executable” to download the automatic installation. Run the downloaded file “CDM21228_Setup” and follow the instructions to install the driver. Do not connect the USB cable while the installing process in running.

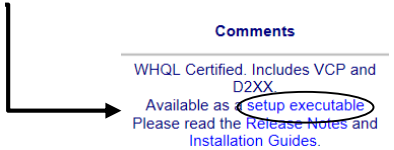

Figure 4. File download for USB control interface drivers

3. Open your web browser and download the software from the following Link. A complete folder will be downloaded with the executable file “MA120xx_GUI” of gui software.

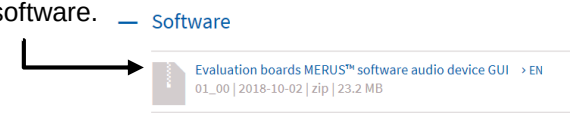

Figure 5. File download for GUI software

4. Make sure toggle buttons are in “shutdown” and “mute” positions.

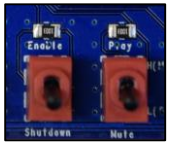

Figure 6. Toggle buttons set to “mute” and “shutdown”

5. Connect all the sources and speaker/load cables:
   a) Audio source to the I2S digital audio input header.
   b) Power source and its ground to PVDD and GND.
   c) Speaker/load to audio output terminals.
   d) USB control interface to the computer.

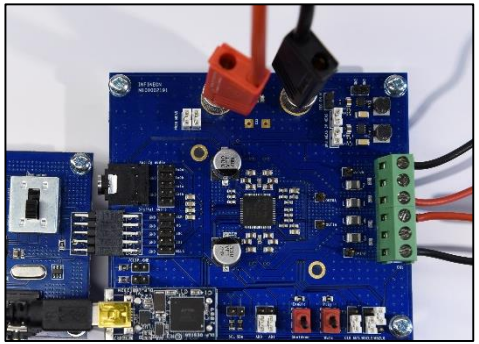

Figure 7. Complete evaluation board connections.

Copyright © Infineon Technologies AG 2019. All rights reserved.

Power and start-up procedure

6. Turn on the PVDD supply

7. Start board by setting toggle switch to “enable” position.



Figure 8. Left toggle switch set to “enable” position.

8. Open the “MA120xx_GUI” file to run the monitoring interface.



Figure 9. MA120xx control software interface

9. If the connection was successful it will be indicated in the ID status line:

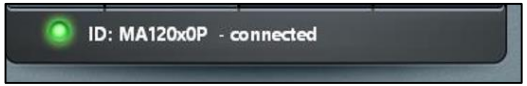

Figure 10. Control interface indicating a successful communication with the board.

10. Press “I2S setup” in order to setup the I2S settings and the audio processor parameters. Note they should follow the same parameters as the source.

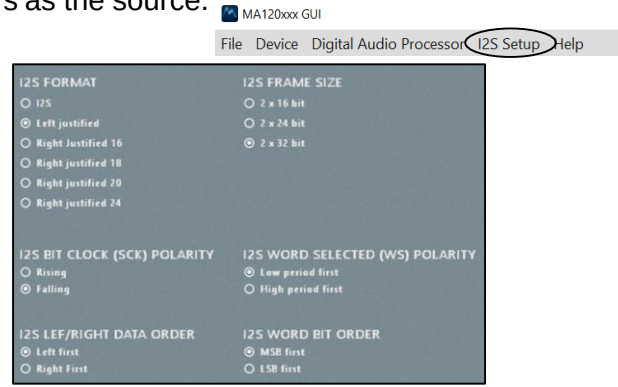

Figure 11. I2S configuration screen.

Copyright © Infineon Technologies AG 2019. All rights reserved.

Power and start-up procedure

11. Press “Digital Audio Processor” in order to setup the audio processor parameters .



Figure 12. Digital audio processor configuration screen.

12. Start playing music from your audio source and set the toggle switch to “play” position. You will be able to monitor the modulation index of both channels and the their current power modes. Also, the power mode profiles can be selected. For more information on power mode profiles please refer to the MA12070P data sheet and Infineon MERUS™ evaluation board user’s guide.



Figure 13. Right toggle switch set to “play” position.

Copyright © Infineon Technologies AG 2019. All rights reserved.

Audio measurements setup

The need for an external filter:

MA120xx and MA120xxP are filterless amplifiers enabled by it's MERUS™ audio multilevel technique. However, in order to obtain reliable measurements results an external low-pass filter is required in front of the input stage. This is because fast transients in the switching output signal might stress the bandlimited input of measurement instruments. Therefore, slew rate limiting and other distortion artifacts may appear due to this stress if no external filtering is applied.

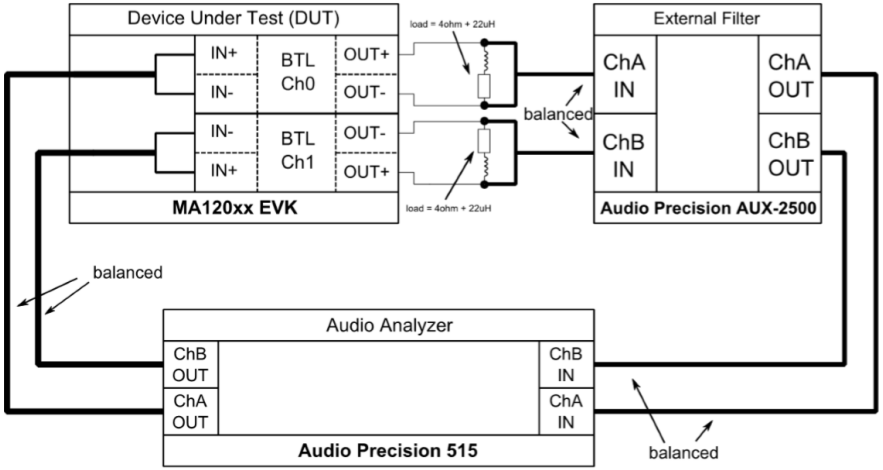

Figure 14. Measurement setup for MA120xx amplifiers.

Copyright © Infineon Technologies AG 2019. All rights reserved.

Support
www.infineon.com/merus

Collaterals and brochures	› Product briefs › Selection guides › Application brochures › Presentations › Articles
Technical material	› Application notes › Whitepapers › Datasheets, MCDS files › PCB design data
Evaluation boards	› Evaluation boards › Demoboards › Reference designs
Videos	› Technical videos › Product information videos › Tradeshow videos

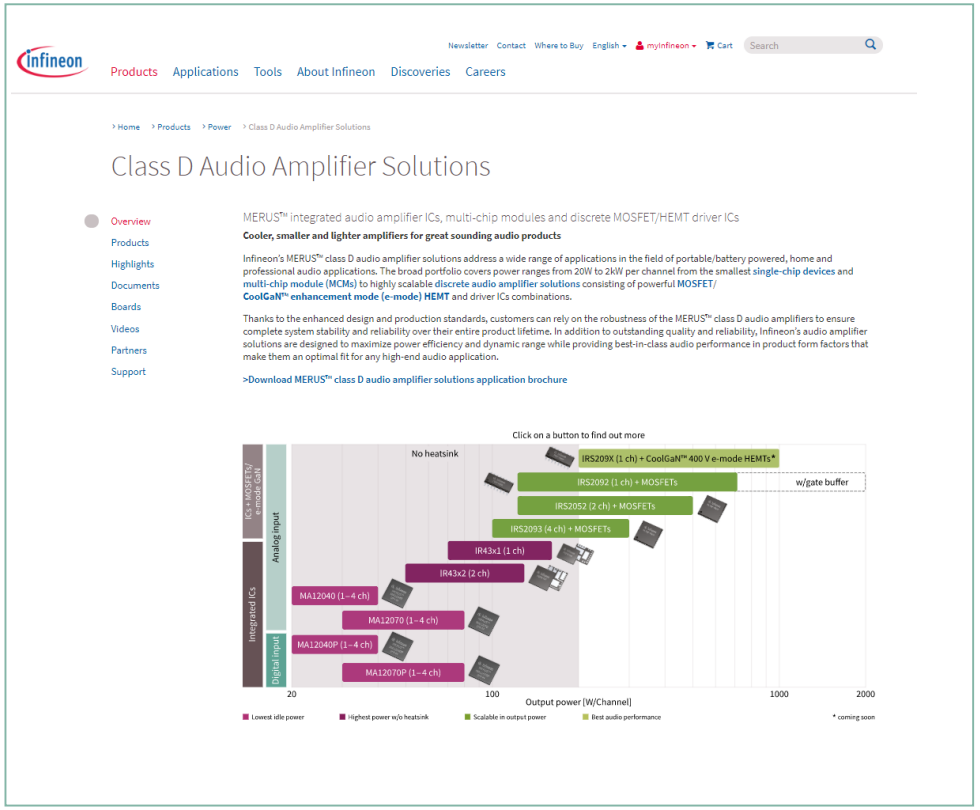

Copyright © Infineon Technologies AG 2019. All rights reserved.

Support
Online tools and services

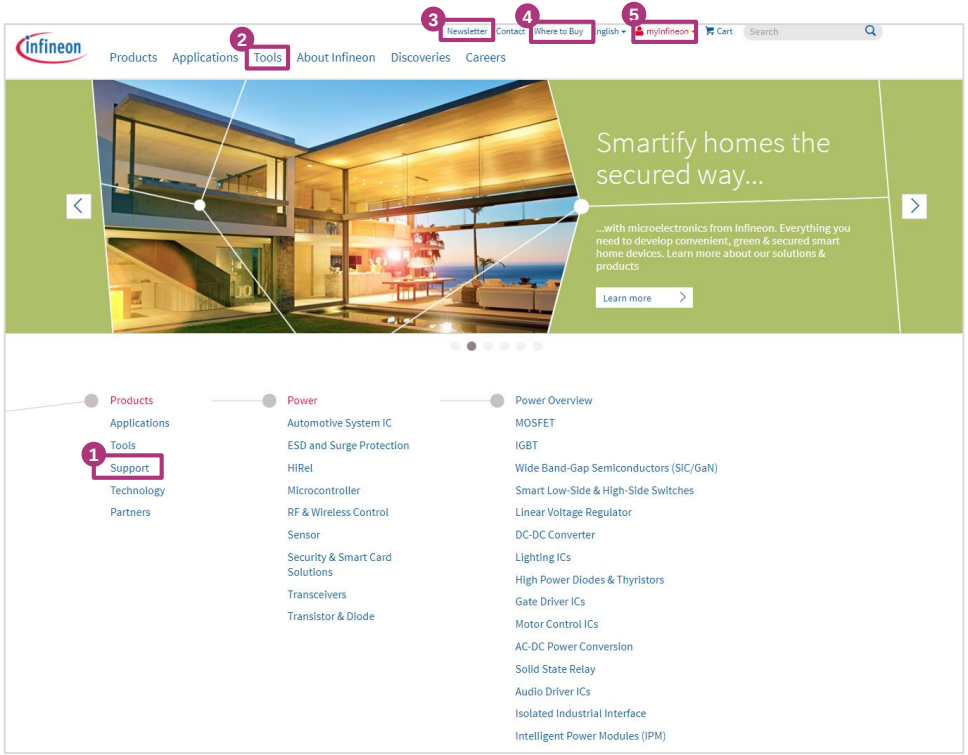

1. Get support
2. Tools, finders and selectors
3. Subscribe to newsletter
4. Where to buy
5. myInfineon

Copyright © Infineon Technologies AG 2019. All rights reserved.

Tailor made information via myInfineon

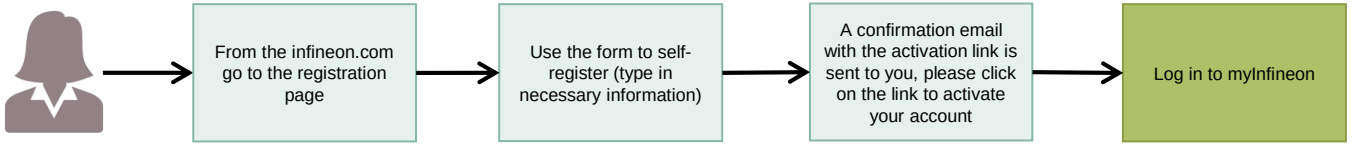

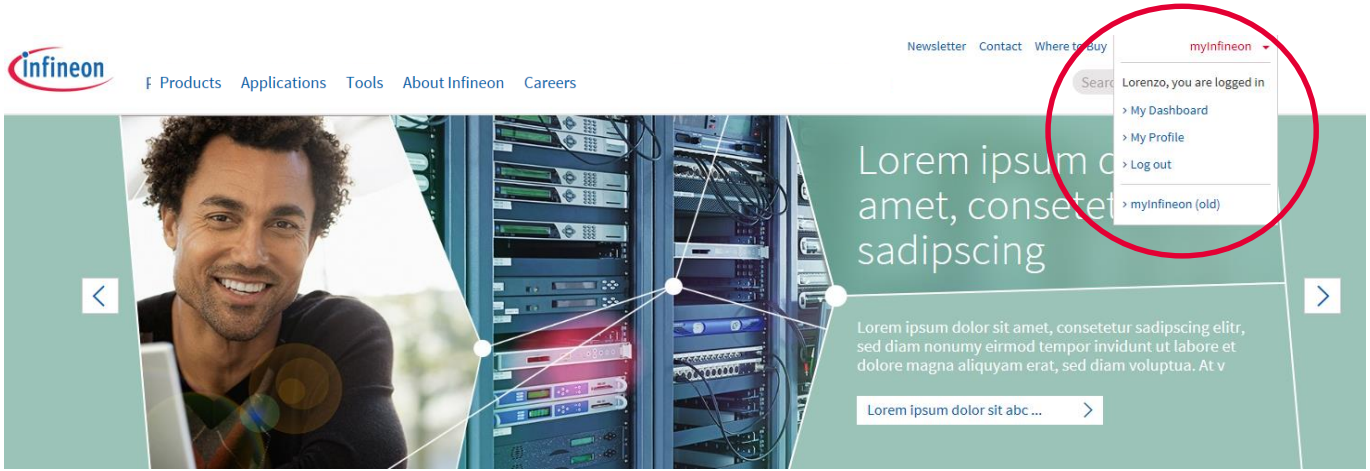

In case of problems with the access, the registration or all other type of issues, please get in touch with your Infineon contact person or with our official support at www.infineon.com/support (available 24/7)

Copyright © Infineon Technologies AG 2019. All rights reserved.



Part of your life. Part of tomorrow.