Part I: LLC calculator

FHA analysis based on a vector algorithm

About this document

Authors:

Mladen Ivankovic

Jon Mark Hancock

Scope and purpose

This note is intended as introductory material to a webinar series addressing LLC design with a very inexpensive toolset that will draw upon a new implementation of FHA(First Harmonic Aproximation) design, and exact mode calculations and verification as the key methods for a fast and effective LLC design methodology.

This note will review the basics of the LLC multi-resonant converter, and describe a new vector method that will provide a simple but more useful algorithm to design the tank system and starting transformer design for the LLC converter.

Details of the tool concepts and usage will be convered in the training webinars, as well as verification techniques using freeware simulation tools with parameterized test files that run quickly on a typical notebook computer.

Intended audience

This document is intended for design engineers who wish to develop a deeper understanding of the operation of LLC converters and their design, and who wish to attend the multi-part LLC training webinars sponsored by Infineon's PMM Academy.

Table of contents

About this document **1**
Table of contents **2**
1 Introduction **3**
2 Overview of the LLC resonant converter **4**
2.1 Topology variations 4
2.2 Modes of operation 5
2.2.1 Unity gain operation (LLC gain = 1) 5
2.2.2 Buck mode of operation (LLC gain <1) 6
2.2.3 Boost mode of operation (LLC gain >1) 7
2.3 First harmonic approximation 8
2.3.1 Transformation of the DC load to the AC load 9
2.3.2 AC equivalent schematic 9
3 Gain **11**
3.1 Voltage divider 11
3.2 Input impedance 12
3.3 Borderline condition in vector form 13
4 Inverse transfer function **14**
4.1 Vector diagram 14
4.2 Component calculation 15
5 Optimum operating range **17**
5.1 Resonant tank energy 17
5.2 Optimum minimum operating frequency 17
5.3 Sensitivity of the optimum value 18
6 Design procedure **19**
6.1 Requirements 19
6.2 Strategy and design outputs 20
7 LLC calculator **21**
7.1 Inputs 21
7.2 Outputs, transfer functions and adjustments 22
7.3 Load variations 22
8 Summary **23**
9 References **24**
Revision history **25**

1 Introduction

The multi-resonant LLC converter has several desirable features, such as high efficiency, low EMI and high power density. However, design of a resonant converter is a challenging task, and requires more effort for design optimization compared to PWM converters. Current state-of-the-art LLC design methods are based on calculus and graphs using a time-consuming iterative procedure. This document aims to simplify this task, and make it easier to optimally design the resonant tank. This paper provides an overview of LLC converter operation and a new design method based on vector analysis. This new method enables Excel to be used to make a simple LLC calculator that provides the key component values of the LLC converter based on given requirements, and begin the design process.

2 Overview of the LLC resonant converter

This section offers an overview of the LLC converter operation and waveforms in the different modes. Figure 1 shows a basic full-bridge LLC converter with full-bridge rectifier. In a simplistic discussion, the switching bridge generates a squarewave form to excite the LLC resonant tank, which will output a resonant sinusoidal current that gets scaled and rectified by the transformer and rectifier circuit. The output capacitor filters the rectified AC current and delivers a DC voltage for the output.

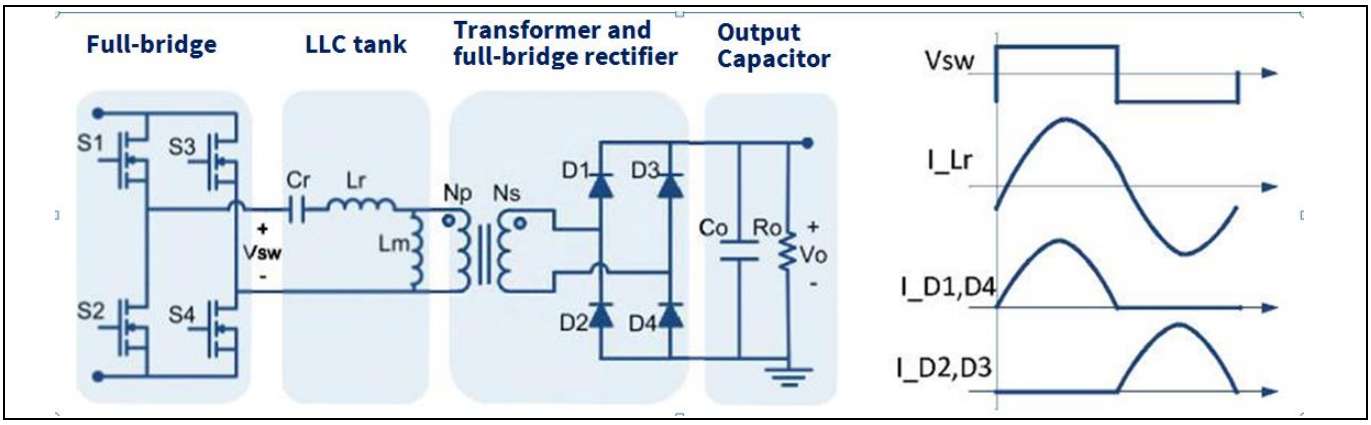

Figure 1 Full-bridge LLC converter with full-bridge rectifier

2.1 Topology variations

To optimize the design according to price/performance criteria, particularly those associated with the rectifier technology, there are number of variations of the LLC converter topology. For example, you can use a half-bridge as a switching bridge on the primary side, and use a center-tap rectifier on the secondary side (Figure 2), or any combination of these.

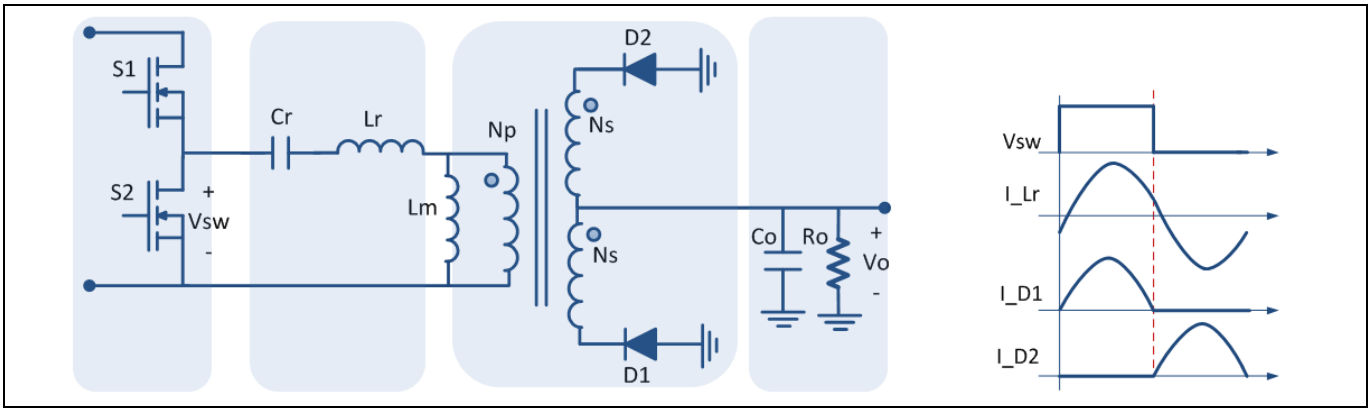

Figure 2 Half-bridge LLC converter with center-tap rectifier

A. Primary side:

- Average input current is the same.
- The half-bridge transformer primary windings take current with a voltage swing of half the input voltage, so Transformer primary winding RMS current is 2× higher. Assuming the same winding window, half-bridge topology will have four times smaller winding resistance. It means that both topologies will have the same transformer conduction losses.

- If you use the same number of MOSFETs, i.e. the half-bridge switch is parallel of the two full-bridge MOSFETs, it will have the same conduction losses in comparison with the full-bridge,
- The full-bridge usually dominates high-power applications while the half-bridge dominates medium- and low-power applications, with fewer switches and drivers required.
- A full-bridge with two transformers may be implemented as a combination of two half-bridges with transformer primaries in series, and in parallel on the output; this configuration inherently forces current matching and balancing between the two stages, but requires transformers designed for low leakage inductance.

B. Secondary side:

- The center-tap rectifier exposes the rectifier to the 2× higher voltage.
- The center-tap rectifier dominates LV output application, where a single diode voltage drop or SR drop is more efficient.
- The center-tap rectifier requires careful control of parasitic inductance on the secondary side to limit voltage overshoots.
- A full-bridge rectifier is an option for medium-output applications with Synchronous Rectification (SR), as a trade-off between V_{DS} and R_{DSon} of the MOSFET, and it is possible to use an LV class of MOSFET with better body diode characteristics (in general, Q_{rr} issues scale with V_{DS} rating) – usually an 80 V or 120 V MOSFET will give better performance than a 150 V or 200 V MOSFET.
- A full-bridge will usually be self-clamping with any voltage overshoots on the secondary side.

2.2 Modes of operation

This is a frequency controlled topology. The frequency operating range is selected such that input impedance of the converter always stays inductive, the current is lagging behind the voltage, and this enables ZVS and near ZCS, which greatly reduces turn-on losses and minimizes turn-off losses. Using the LLC converter in the correct operating modes is a key to realizing these benefits, as buck operation instead of DCM boost operation will incur non-ZCS switching on the secondary side.

2.2.1 Unity gain operation (LLC gain = 1)

In this mode, the converter operates at a frequency equal to the resonant frequency of the tank:
$fr = 1/(2 * \pi * \sqrt{L_r * C_r}$.
The effective impedance of the resonant tank is zero (ignoring component parasitics), and output voltage is equal to the transformer primary voltage divided by the transformer ratio. There is no converter contribution to the gain, so the tank operates at a gain of one.

In the case of a full-bridge converter, the transformer primary-side voltage is equal to the input voltage, while in the case of the half-bridge converter, the transformer primary-side voltage is equal to half of the input voltage. This happens because the half-bridge generates a unipolar pulse with an amplitude equal to the input voltage, the DC component (half of the pulse) is filtered out by the resonant capacitance, and the AC component that comes to the primary side of the transformer is equal to the half of the amplitude, or half of the input voltage. The input current angle is identified by the red circle in Figure 3. This angle will be a key variable to follow throughout the AN.

Switches S1 and S2 are operating with 50% duty cycle and generate unipolar voltage pulse V_{sw} with an amplitude V_{in}. The magnetizing current L_m has a triangular waveform and is lagging behind the voltage.

When S2 is off (shown by the blue region), the available magnetizing current then charges C_{oss} of the switch S2 and discharges C_{oss} of the switch S1, causing a resonant transition, until the voltage on the S2 reaches V_{in} and the body diode of the S1 starts to conduct.

Then control turns on switch S1, after a fixed or adaptive dead-time interval. This method eliminates turn-on losses on switch S1 and minimizes turn-off losses on switch S2.

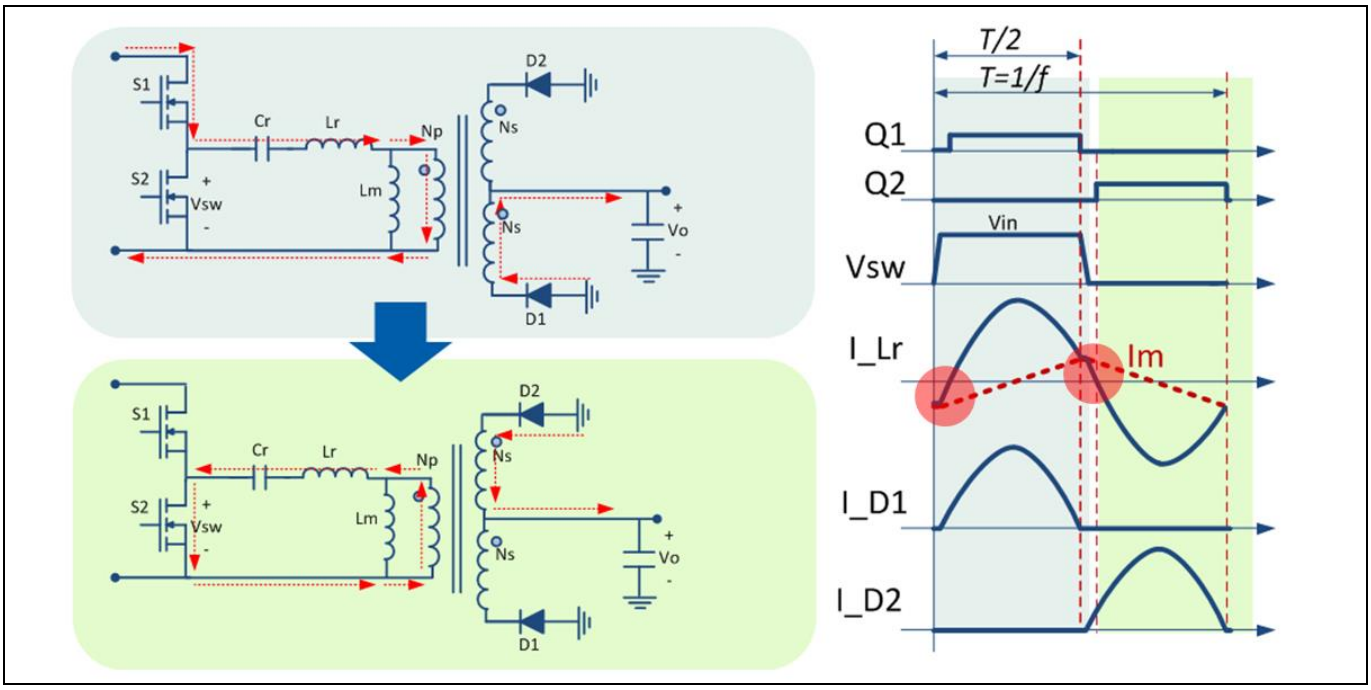

Figure 3 LLC converter operation at resonant frequency

When S1 is on, this starts the resonant oscillation determined by the resonant tank (L_r, C_r) that shapes input current (I_L_r) as a half of the sinewave. Input current is equal to the sum of magnetizing current and the secondary current. The magnetizing current is not conveyed to the secondary side, and constitutes a parasitic loss on the primary side, which must be minimized for wide load range efficiency, but must be sufficient for the MOSFET switching transitions under all conditions and at all frequencies. This magnetizing current varies in level with the actual switching frequency. The starting point of the magnetizing current is negative, and the secondary diode D1 starts to conduct from zero, which explains the negative starting input current. Power delivery stops when the current through the diode reaches zero. This means that converter has zero current switching on the secondary side. That will minimize switching losses caused by diode recovery time. Then control turns off switch S1.

When S1 is off (shown by the green region), the magnetizing current charges C_{oss} of the switch S1 and discharges C_{oss} of the switch S2, until the voltage on switch S2 reaches zero and the body diode of switch S2 starts to conduct. Then control turns on switch S2. Again, this method eliminates turn-on losses on switch S1 and minimizes turn-off losses on switch S2. When S2 is on, this starts the resonant oscillation in the opposite direction determined by the resonant tank (L_r, C_r) that shapes the transformer primary-side current (I_L_r) as half of the sinewave. Secondary diode D2 starts to conduct, resulting in power delivery to the secondary side. Power delivery stops when current through the diode reaches zero.

In the blue cycle, the converter takes power from the input, delivers power to the output and charges capacitor C_r. In the green cycle, and the converter delivers power from capacitor C_r to the output.

2.2.2 Buck mode of operation (LLC gain <1)

In this mode the converter operates at a frequency above the resonant frequency of the tank:
$fr = 1/(2 * \pi * \sqrt{L_r * C_r}$.
The impedance of the resonant tank is inductive, the input impedance is also inductive and, again, the output voltage is lagging behind the voltage and eliminates turn-on loss and minimizes turn-off loss for the primary-side switches.

The key difference compared to the previous operating mode is the duration of the power transfer interval. The control does not wait until half of the resonant cycle (L_r, C_r) is completed.

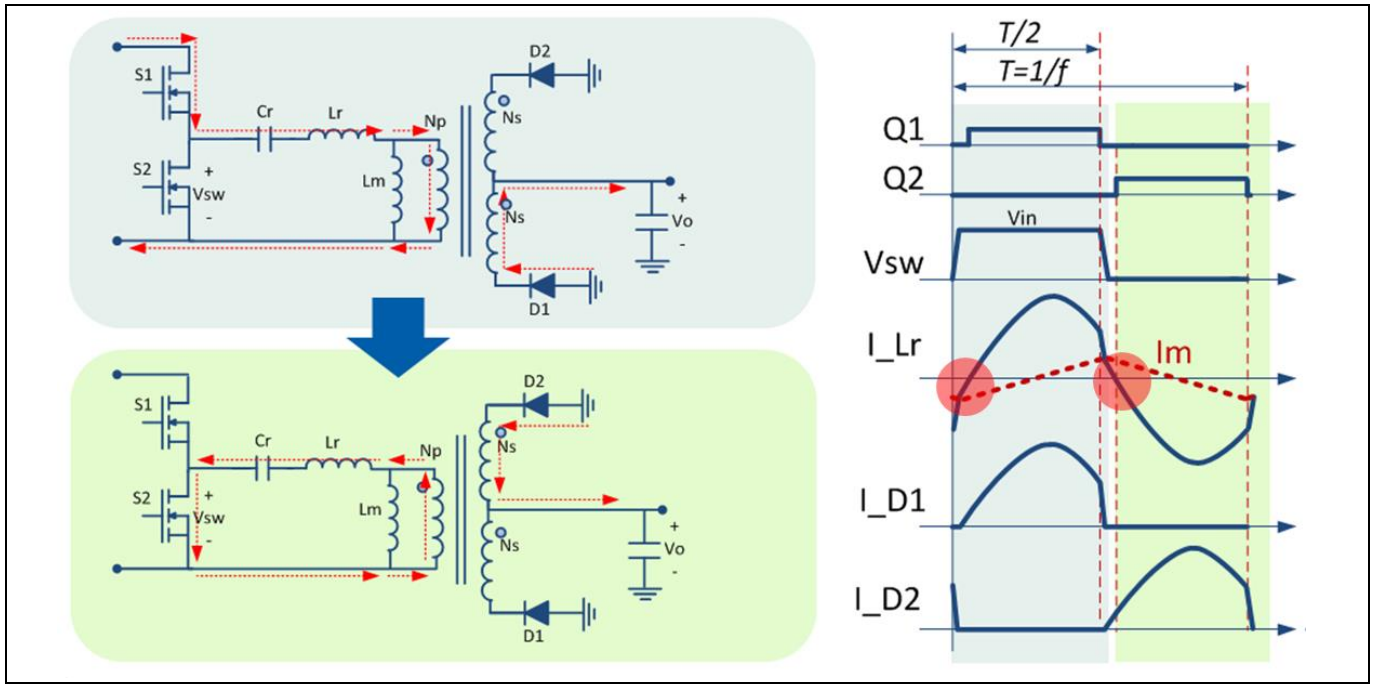

Figure 4 LLC converter operation above the resonant frequency

It turns off the switch before the diode current D1 or D2 reaches zero. This has two effects. First, it lowers the output voltage (the gain becomes less than one), and second, diodes D1 and D2 are turned off with forced commutation. This will result in some switching losses. It is possible to use SR on the secondary side with the appropriate control algorithm for switching (i.e., referenced to the primary side. No independent SR on the secondary side).This requires precise timing when switching the SR on and off.

2.2.3 Boost mode of operation (LLC gain >1)

The converter operates at a frequency below the resonant frequency of the tank $fr = 1/(2 * \pi * \sqrt{L_r * C_r}$. The impedance of the resonant tank is capacitive. The load impedance (magnetizing inductance and parallel load) is inductive. The input impedance is the sum of these two. Below a certain frequency fo, capacitive resonant impedance prevails, and the net input impendace becomes capacitive. The current leads the voltage and the MOSFET current crosses zero before control turns off the MOSFET. Under these conditions, the body diode starts conducting. Instead of lossless turn-on, there is hard commutation of the body diode, which brings additional switching losses. This capacitive mode should be avoided, so the useful operating range is defined as one above the minium operating frequency f_o.

Operating below the resonant tank frequency f_r means that the MOSFET stays on after the resonant cycle is completed (shown by the blue region in Figure 5). Power is transferred to the secondary side, and diode D1 is off. For the rest of the duty cycle, the primary current flows as indicated by the green region; through the MOSFET switch S1, and the resonant tank and magnetizing inductance L_m. The result is to also charge capacitor C_r. Additional capacitor energy is transferred to the secondary side in the next switching cycle. It seems that the LLC operates like a charge pump in this mode. A longer charging interval means more energy in resonant capacitor C_r, and higher output voltage. The operating frequency should not go too low, because then the LLC converter can slip into the capacitive mode of operation. The details of operating cycles are shown in Figure 5.

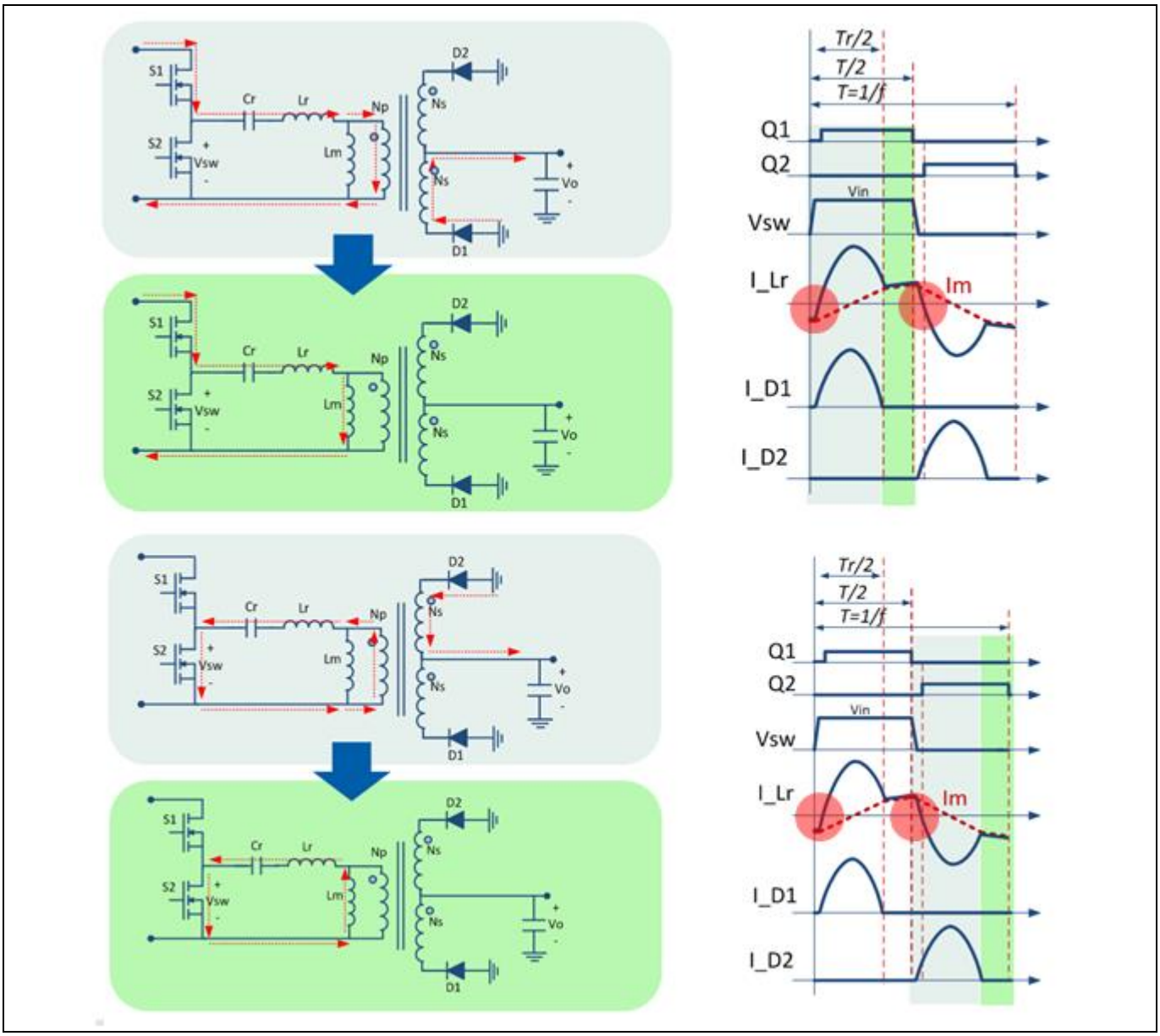

Figure 5 LLC converter operation below resonant frequency

2.3 First harmonic approximation

The LLC converter is a non-linear topology that combines a linear network (resonant tank and transformer) with active switches (MOSFETs) and passive switches (diodes). The non-linear nature of the switching topology prevents simple and effective methods of the linear AC circuit analysis from being directly applied in this case. Averaging methods common in PWM topologies are not directly applicable either, because operating switching frequency is very close to the resonant frequency.

However, there is a helpful detail: the output diode current has the shape of the half-sinewave. When two half-sinewaves of different directions are combined they make a full sinewave (at resonance). Harmonic analysis shows that the first harmonic represents this current very well. This could be used to simplify the topology and enable linear circuit analysis methods.

2.3.1 Transformation of the DC load to the AC load

The secondary output current is(t) is rectified to give a pulsing output current |is(t)|, which is filtered by the output capacitor. Since no DC current can pass through the capacitor, the DC component of |is(t)| must be equal to the steady load current Io.

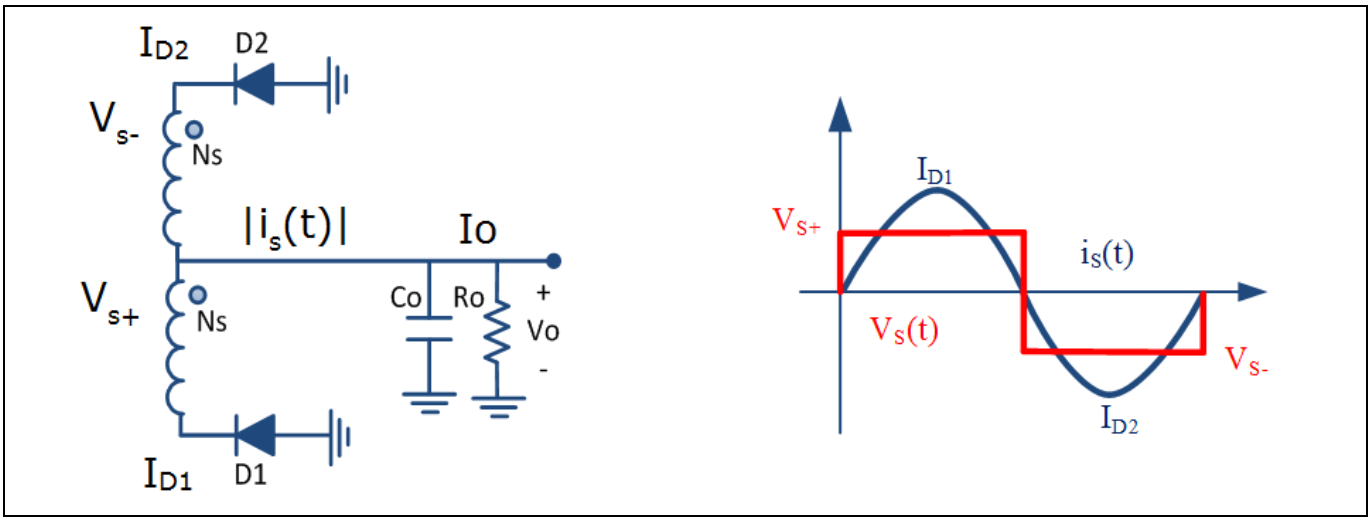

Figure 6 Output rectifier and load, and output voltage and current waveforms

In order to operate in the AC domain, the current and voltage of the the second half can be virtually flipped to get AC signals, as shown in Figure 6. Let's describe these waveforms using AC analysis variables.

The average value of the secondary current first harmonic I_{S1} [composed from I_{D1} and I_{D2}] is equal to the output current:

$$Io = \frac{2}{\pi} * Is1 \quad (1)$$

Vs1(t) is the first harmonic of the Vs(t) [squarewave voltage], and it is given as its fundamental component with amplitude:

$$Vs1 = \frac{4}{\pi} * Vs = \frac{4}{\pi} * Vo \quad (2)$$

Since Vs1(t) is in the phase with Io(t), the rectifier presents an effective ressistive load Re to the tank circuit. The value of Re is equal to the ratio of Vo1(t) to Io(t). This yields to:

$$Re = \frac{Vo1}{Io1} = \frac{8}{\pi^2} * \frac{Vo}{Io} = \frac{8}{\pi^2} * Ro \quad (3)$$

When the equivalent AC load is moved to the primary side, it needs to be scaled with the square of the transformer transfer ratio. We get the equivalent AC load reflected to the primary side R_{ac}as:

$$R_{ac} = (\frac{N_p}{N_s})^2 * Re \quad (4)$$

2.3.2 AC equivalent schematic

First Harmonic Approximation (FHA) eliminates non-linearities and generates an equivalent AC schematic. The input squarewave voltage is replaced with first harmonic of the voltage squarewave, while the secondary section with rectifier and load is replaced by equivalent load Re. The transformation is shown on Figures 7 and 8.

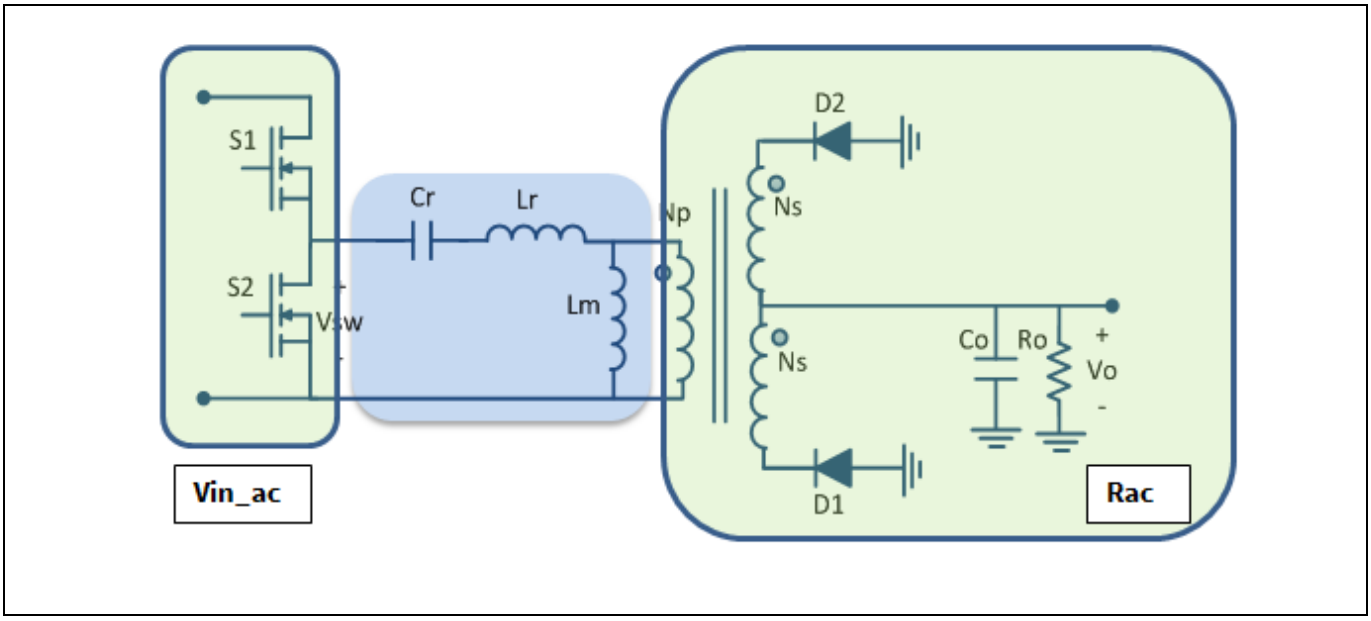

Figure 7 LLC – basic schematic

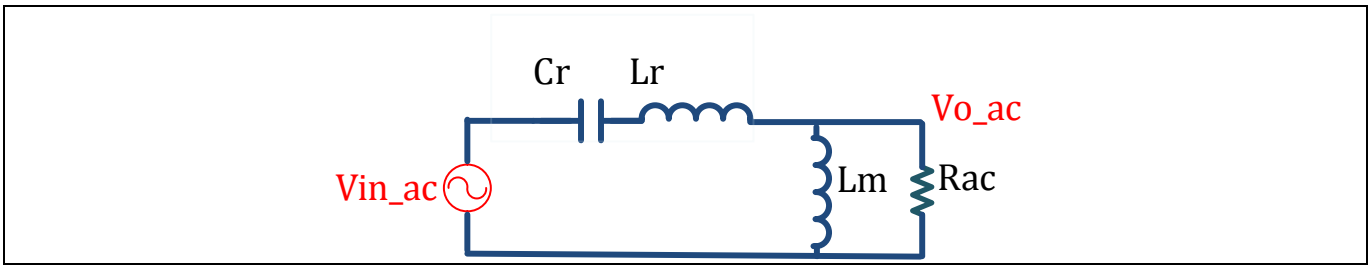

Figure 8 LLC – equivalent AC schematic

3 Gain

The input AC voltage is equal to the first harmonic of the input squarewave voltage:

$$V_{in_ac} = p * \frac{4}{\pi} V_{bus} \quad (5)$$

The output AC voltage is equal to the reflected first harmonic of the secondary output squarewave voltage:

$$V_{o_ac} = (\frac{N_p}{N_s}) * \frac{4}{\pi} Vo \quad (6)$$

The transfer function is given as a ratio of input and output voltage:

$$G(\omega) = \frac{V_{o_ac}}{V_{in_ac}} \quad (7)$$

The LLC converter gain G(ω)has three components:

Gain = (switching bridge gain)*(transformer turns ratio (Ns/Np) *(resonant tank gain)

The switching bridge gain depends on the topology employed. The full-bridge topology has gain equal to one, while the half-bridge topology has a gain of half. Let's represent topology gain as "p".

$$p = 1 \ldots for\ full\ bridge\ topology \ (8)$$

$$p = ½ \ldots for\ half\ bridge\ topology \ (9)$$

The resonant tank gain is based on the load and resonant tank impedance ratio. Note that it behaves like a frequency driven voltage divider M(ω).

3.1 Voltage divider

In nutshell, the LLC converter could be represented as a voltage divider with gain:

$$M(\omega) = \frac{Z_{lp}(\omega)}{Z_{lp}(\omega) + Z_r(\omega)} \ (10)$$

Where:

- resonant tank impedance: $Z_r(\omega_o) = j * \omega_o * L_r + \frac{1}{j*\omega_o*C_r}$ (9)
- parallel load impedance: $Z_{lp}(\omega o) = \frac{R_{ac}*(j*\omega_o*L_m)}{R_{ac}+j*\omega_o*L_m}$ (10)

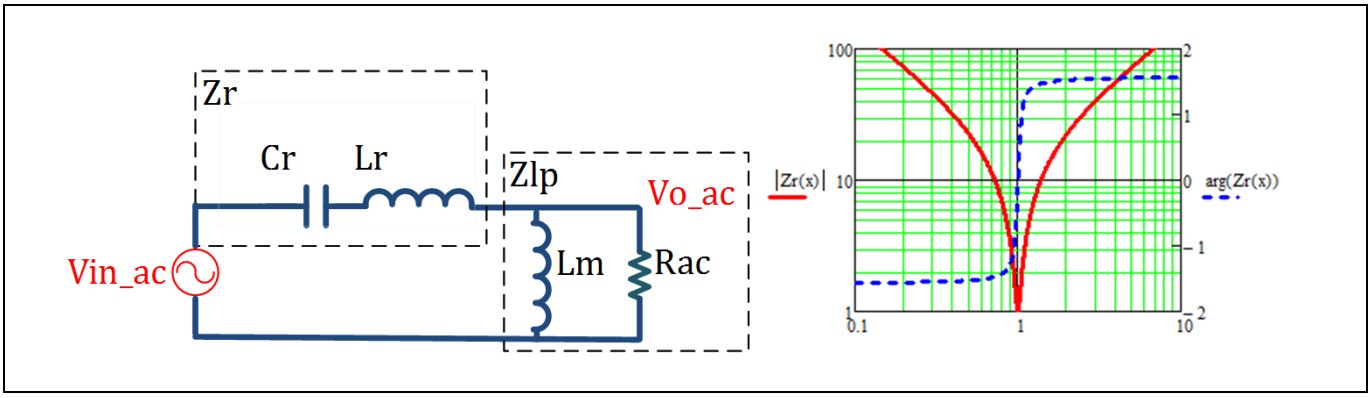

Figure 9 LLC converter as a voltage divider, and resonant tank impedance

When the frequency is changing, both impedances (Z_r and Z_{lp}) will change and the divider will change the effective ratio, providing a different gain. It is interesting to monitor the input impedance of the divider.

The input impedance is equal to the sum of resonant impedance Z_r and load impedance Z_{lp}:

$$Z_{in}(\omega) = Z_{lp}(\omega) + Z_r(\omega) \qquad (12)$$

The load impedance always has an inductive character. When the operating frequency is changing, only the amplitude of this impedance is changing. A lower operating frequency results in a lower impedance. Let's have a look at the resonant impedance Z_r (Figure 9).

When the operating frequency is equal to the resonant frequency f_r, the reactive portion of the Z_r impedance is equal to zero, and the total impedance of Z_r is equal just to the parasitic resistance of L_r and has its minimal value. When the frequency is changing around the resonant frequency ω_r, the resonant impedance Z_r is changing both its amplitude (shown by the red line) and character from capacitive to inductive. That is shown on the impedance angle (shown by the blue line). When the operating frequency continues to drop below the resonant frequency, the capacitive impedance becomes larger and larger, and at a certain point it prevails over the load impedance Z_{lp}, so the total impedance becomes capacitive.

1. **Operating frequency ω_{sw} (switching frequency) $\geq \omega_r$ (resonant frequency),**
   Z_r is inductive, $Z_{lp} + Z_r > Z_l$ gain is less than one (buck) and input impedance is inductive.
2. **Operating frequency ω_{sw} (switching frequency) $= \omega_r$ (resonant frequency),**
   Z_r = 0, $Z_{lp} + Z_r = Z_l$ gain is one and input impedance is inductive.
3. **Operating frequency ω_{sw} (switching frequency) $< \omega_r$ (resonant frequency),**
   Z_r is capacitive, $Z_{lp} + Z_r < Z_l$ gain is larger than one (boost) and input impedance is still inductive.

Borderline case:

Input impedance $Z_i(\omega o)$ angle is equal zero.

ω_{sw}(switching frequency) = ω_o (zero angle frequency).

If the operating frequency less than ω_o, the input impedance has a capacitive character and the converter will operate in so-called capacitive mode. The bridge diode is hard commutated, and switching losses are becoming very high, so we don't want the converter to operate in that mode. Note that the input impedance angle is a key parameter to monitor.

3.2 Input impedance

Let's analyze the input impedance in detail:

$$Z_{in} = Z_{lp}(\omega) + Z_r(\omega) = Z_{lp}(\omega) * \frac{Z_{lp}(\omega)+Z_r(\omega)}{Z_{lp}(\omega)} \quad (13)$$

$$Z_{in}(\omega) = \frac{Z_{lp}(\omega)}{M(\omega)} \quad (14)$$

The borderline case is when the input impedance angle is equal to zero. If the frequency goes up, the angle becomes positive (or inductive); if the frequency goes down, the angle becomes negative (or capacitive).

Let's say that the impedance angle is equal to zero, at minimum operating frequency ω_o:

$$Angle(Z_{in}(\omega_o)) = 0 \quad (15)$$

$$Angle(Z_{in}(\omega_o)) = Angle\left(\frac{Z_{lp}(\omega_o)}{M(\omega_o)}\right) = 0 \quad (16)$$

$$Angle\left(Z_{lp}(\boldsymbol{\omega_o})\right) + Angle\left(\frac{1}{M(\boldsymbol{\omega_o})}\right) = 0 \quad (17)$$

As we know, there is a relation between the parallel load angle:

$R_{ac}$and L_m in parallel connection $Z_{lp} = R_{ac}||(j\omega * Lm)$

And the angle of the serial combination of the load parameters

$R_{ac}$and L_m in serial connection:

$$Z_{ls} = R_{ac} + j * \omega * Lm)$$

$$Angle\ (Z_{lp}) = \frac{\pi}{2} - \ Angle\ (Z_{ls}) \quad (18)$$

Combining equations (17) and (18), one gets:

$$\frac{\pi}{2} - Angle\left(Z_{ls}(\boldsymbol{\omega_o})\right) + Angle\left(\frac{1}{M(\boldsymbol{\omega_o})}\right) = 0 \quad (19)$$

And it leads to the most important conclusion:

$$Angle\left(\frac{1}{G(\boldsymbol{\omega_o})}\right) = Angle\left(Z_{ls}(\boldsymbol{\omega_o})\right) - \frac{\pi}{2} \quad (20)$$

It means that vectors $\left(\frac{1}{M(\boldsymbol{\omega_o})}\right)$ and $Z_{ls}(\boldsymbol{\omega_o})$ are orthogonal at minimum operating frequency $\boldsymbol{\omega_o}$.

3.3 Borderline condition in vector form

One can visualize the relation (20) in the form of the vector diagram.

The vector diagram of inverse gain $\left(\frac{1}{M(\boldsymbol{\omega_o})}\right)$ and the serial equivalent impedance $Z_{ls}(\omega_o)$are given in Figure 10:

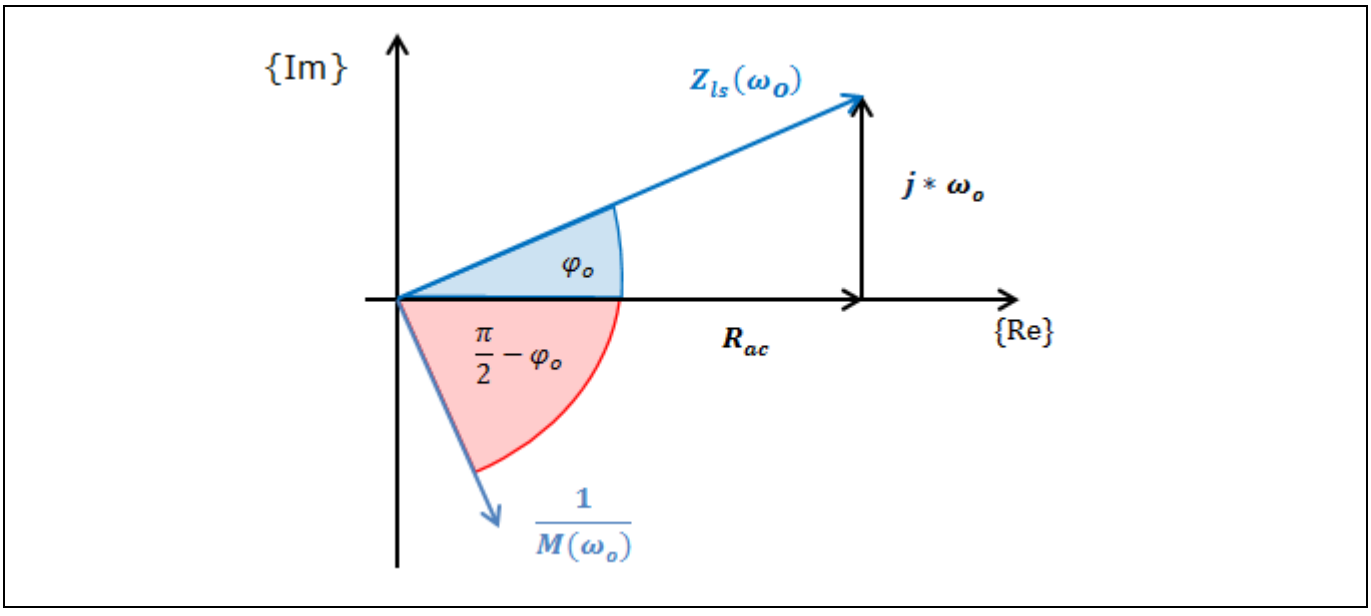

Figure 10 Vectors $\frac{1}{M(\omega_o)}$ and $Z_{ls}(\omega_o)$are orthogonal at ω_o

4 Inverse transfer function

The LLC transfer function given by equation (10) can be written in the form (21), and named the inverse transfer function of the LLC converter. The inverse transfer function of the LLC converter is given by a simple equation as:

$$\frac{1}{M(\omega_o)} = 1 + \frac{Z_r(\omega_o)}{Z_{lp}(\omega_o)} \quad (21)$$

The resonant tank impedance is equal to:

$$Z_r(\omega_o) = j * \omega_o * L_r + \frac{1}{j * \omega_o * C_r} = j * \omega_o * L_r * \left(1 - \left(\frac{\omega_r}{\omega_o}\right)^2\right) \quad (22) \quad where \quad \omega_r = \frac{1}{\sqrt{L_r * C_r}} \quad (23)$$

And the parallel load impedance is equal to:

$$Z_{lp}(\omega o) = \frac{R_{ac} * (j * \omega_o * L_m)}{R_{ac} + j * \omega_o * L_m} \quad (24)$$

Substituting (22) and (24) into (21), one gets new relation for the inverse gain as:

$$\frac{1}{G(\omega_o)} = 1 + \frac{L_r}{R_{ac} * L_m} * \left(1 - \left(\frac{\omega_r}{\omega_o}\right)^2\right) * (R_{ac} + j * \omega_o * L_m) = 1 + \frac{L_r}{R_{ac} * L_m} * \left(1 - \left(\frac{\omega_r}{\omega_o}\right)^2\right) * (Z_{ls}) \quad (25)$$

Equation (25) can be simplified as:

$$\frac{1}{G(\omega_o)} = 1 + p * (Z_r) * (Z_{ls}) \text{ where p } = \frac{1}{\omega_o * R_{ac} * L_m} \quad (26)$$

4.1 Vector diagram

Let's use the relation (26) to draw the LLC converter vector digram of the inverse gain at the borderline condition. Remembering equation (20), it says that inverse gain and serial impedance are orthogonal. It gives a clue as to how to construct the vector diagram. Also, notice that product p*(Z_r) might have positive or negative values, because Z_r could change the sign around resonant tank frequency. When the operating frequency is higher than the resonant tank frequency, it is a positive number, and when the operating frequency is lower than the resonant tank frequency, it is a negative number. It does not affect the angles between vectors. It only affects directions and scaling of the vectors.

So, how do we construct the orthogonal vectors? (Figure 11.)

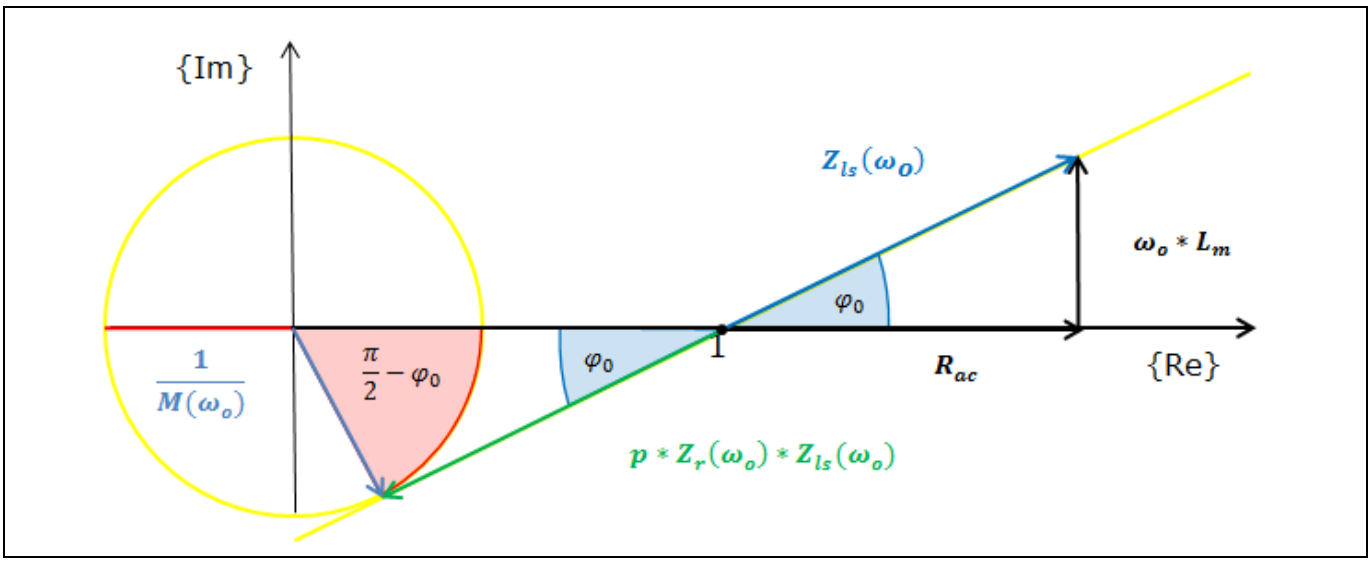

Figure 11 LLC converter inverse gain vector diagram

Start with a circle that has a radius equal to inverse gain ($\frac{1}{M(\omega_o)}$), then draw the tanget to the circle that passes through the point (1,0) on the real axis. The radius vector ($\frac{1}{M(\omega_o)}$) connects the center of the circle with the point where the tangent touches the circle. The tangent and radius always make an orthogonal angle to the tangent. Let's draw the tangent through the point (1,0), so the tangent line would represent the series impedance line. Draw the load AC resistance R_{ac} on the real axis {Re}, and the inductive part of the load ($\boldsymbol{\omega_o * L_m}$) is orthogonal to R_{ac} and connects the top of the R_{ac} with the tangent to the inverse gain of the LLC converter.

4.2 Component calculation

The essential part of the LLC converter is the resonant circuit. In order to achieve a specific gain with resonant circuit at a given load, it needs to have certain quality factor.

Quality factor is the ratio between the load inductive component and equivalent AC load:

$$Q_m = \frac{\omega_o * L_m}{R_{ac}} \quad (27)$$

As we can see from the vector diagram in Figure 12, for the given R_{ac}, the inductive component of converter ($\omega_o * L_m$) is proportional to the inverse gain ($\frac{1}{M(\omega_o)}$) of the LLC converter. If more gain is needed, the inductive component needs to be smaller.

Additional information that is needed is the frequency operating range, which is determined by the minimum operating frequency ($\boldsymbol{\omega_o}$), and resonant tank frequency ($\boldsymbol{\omega_r}$).

Key input parameters:

i. Required LLC maximum gain $\boldsymbol{M(\omega_o)}$
ii. Equivalent AC load $\boldsymbol{R_{ac}}$
iii. Minimum operating frequency $\boldsymbol{\omega_o}$
iv. Resonant frequency (unity gain) $\boldsymbol{\omega_r}$

Redraw the inverse gain vector diagram and highlight the two orthogonal triangles on the vector diagram as:

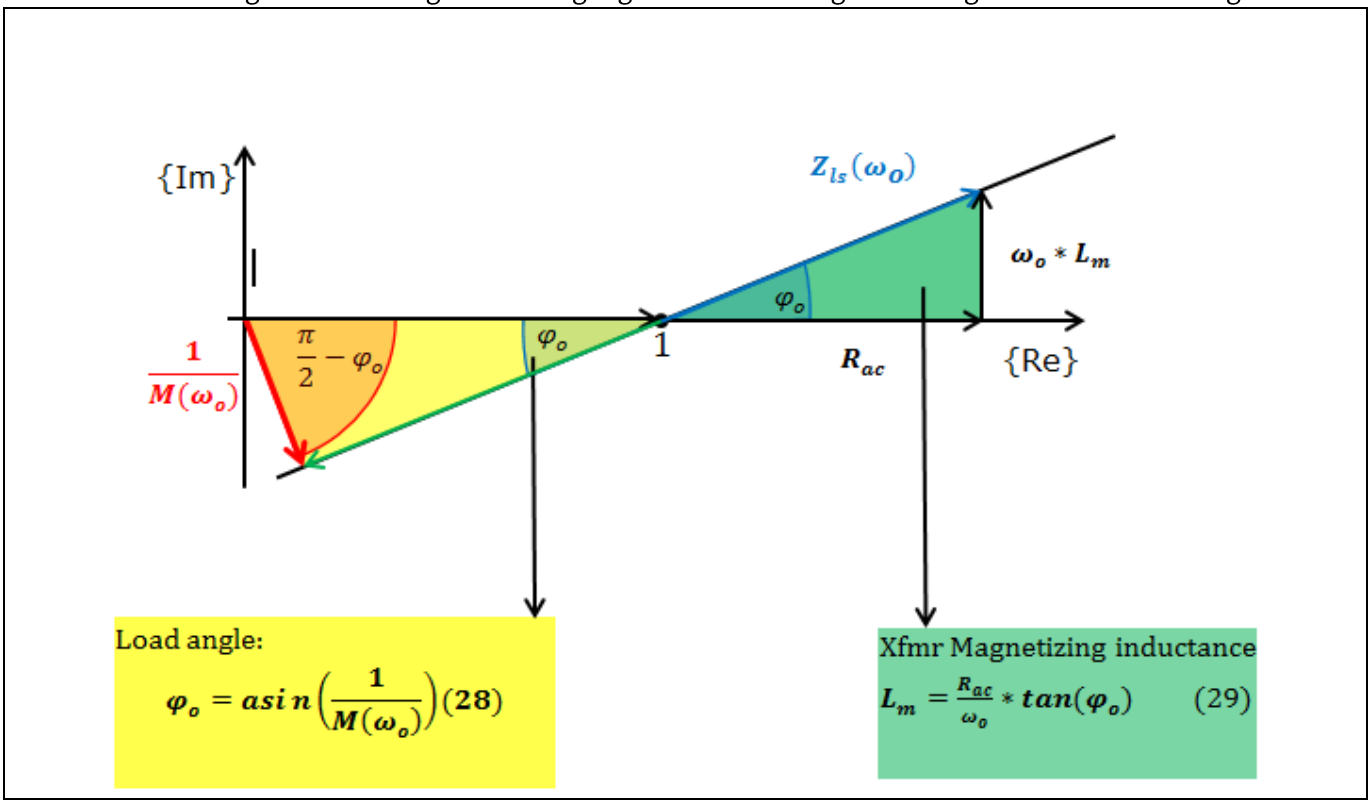

Figure 12 Inverse gain vector diagram – angle connection

The yellow triangle has a hypotenuse equal to one. It is very simple to calculate the angle φ_0 using the asin function per formula (28). The green triangle is also orthogonal, with one known angle φ_0 and one side equal to R_{ac}, so using formula (29), the inductance L_m is calculated.

Using formulas (26), (27) and (29) you can derive relations (30) that give greater insight into the operation of the LLC converter, so more gain requires a lower quality factor:

$$Q_m = \frac{1}{\sqrt{M(\omega_0)^2 - 1}} \qquad (30)$$

Now, you can calculate the rest of the parameters using the vector diagram Figure 13:

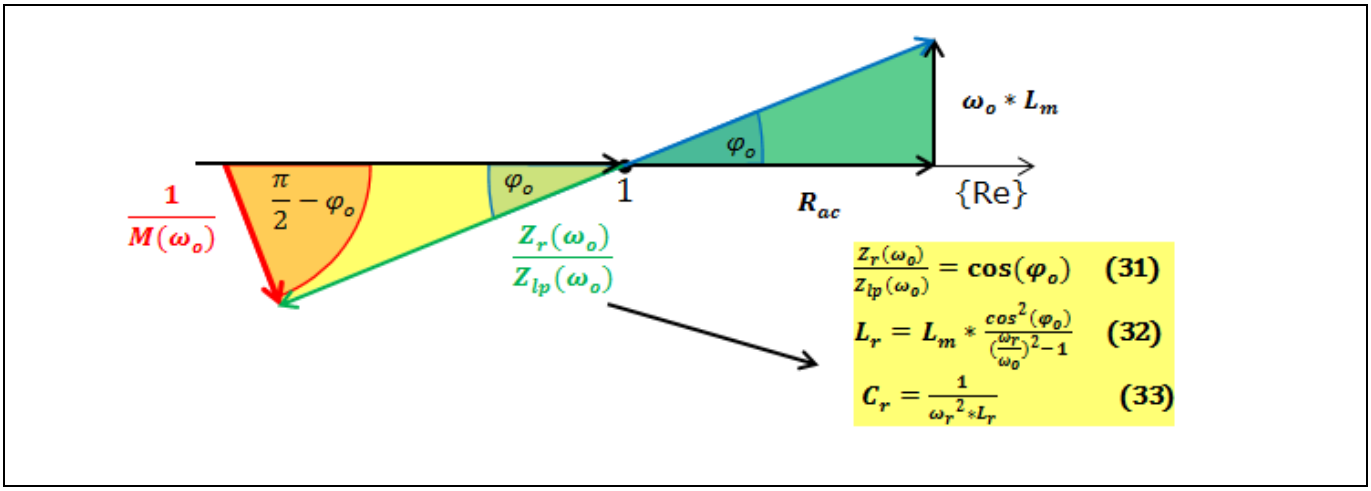

Figure 13 Inverse gain vector diagram – yellow orthogonal triangle

One side of the yellow triangle is the impedance ratio of the resonant tank and load impedance. The hypotenuse of the triangle is equal to one, so the impedance ratio is equal to the cos of the angle φ_0. The resonant tank parameters are given by formulas (32) and (33). As a result, we have LLC converter parameters:

i. Load angle at maximum gain $\boldsymbol{\varphi_o}$ by equation (28)
ii. XFMR magnetizing inductance $\boldsymbol{L_m}$ by equation (29)
iii. Resonant tank inductance $\boldsymbol{L_r}$ by equation (32)
iv. Resonant tank capacitance $\boldsymbol{C_r}$ by equation (33)

It is possible to manipulate formulas and express LLC converter parameters as a function of the maximum gain and minimum operating frequency, as:

$$L_m = \frac{1}{\sqrt{M(\omega_0)^2 - 1}} * \frac{R_{ac}}{\omega_o} \qquad (34)$$

$$L_r = L_m * \frac{1 - M(\omega_0)^2}{(\frac{\omega_r}{\omega_o})^2 - 1} \qquad (35)$$

$$C_r = \frac{1}{\omega_r^2 * L_r} \qquad (36)$$

Note that magnetizing inductance is the key parameter that determines the LLC converter gain. With a given minimum operating frequency of ω_0, if more gain $M(\omega_0)$ is needed, L_m inductance should be smaller.

5 Optimum operating range

In previous calculations the minimum operating frequency had a voluntary value. But how does selection of the minimum operating frequency impact the size of the passive components of the LLC converter?

5.1 Resonant tank energy

The size of the resonant tank is proportional to the average peak energy contained in the resonant tank. Average peak energy E(ω_o) of the resonant tank is equal to the sum of the peak energy contained in the resonant inductance L_r and peak energy contained in the resonant capacitance C_r divided by two.

I_{pko} – the LLC peak input current at minimum input voltage operating at ω_o

$E_{lr}(\omega_o)$ – the energy contained in the resonant inductance L_r

$$E_{lr}(\omega_o) = \frac{1}{2} * L_r * {I_{pko}}^2 \quad (21)$$

$E_{cr}(\omega_o)$ – the energy contained in the resonant capacitance C_r

V_{cpko} – the resonant capacitor peak voltage

$$E_{cr}(\omega_o) = \frac{1}{2} * C_r * {V_{cpko}}^2 = \left| V_{cpko} = \frac{I_{pko}}{\omega_o * C_r} \right| = \frac{1}{2} * \frac{{I_{pko}}^2}{{\omega_o}^2 * C_r} = \left| C_r = \frac{1}{{\omega_r}^2 * L_r} \right| \quad (22)$$

$$E_{cr}(\omega_o) = \frac{1}{2} * L_r * {I_{pko}}^2 * \left(\frac{\omega_r}{\omega_o}\right)^2 \quad (23)$$

$E(\omega_o)$ – the average peak energy of the resonant tank is given as:

$$E(\omega_o) = \frac{1}{2} * \left(E_{lr}(\omega_o) + E_{cr}(\omega_o)\right) = \frac{1}{2} * L_r * {I_{pko}}^2 * \left(1 + \left(\frac{\omega_r}{\omega_o}\right)^2\right) \quad (24)$$

Using the formulas (17) and (19) we can eliminate L_r from (24) and get:

$$E(\omega_o) = \frac{1}{2} * {I_{pko}}^2 * \frac{R_{ac}}{\omega_r} * \tan(\varphi_o) * cos^2(\varphi_o) * \left(1 + \left(\frac{\omega_r}{\omega_o}\right)^2\right) * \left(\frac{\omega_r}{\omega_o}\right) / \left(\left(\frac{\omega_r}{\omega_o}\right)^2 - 1\right) \quad (25)$$

The front end portion of the equation above:

$\left\{\frac{1}{2} * {I_{pko}}^2 * \frac{R_{ac}}{\omega_r} * \tan(\varphi_o) * cos^2(\varphi_o) = E\right\}$ does not depend on ω_o.

So, we can rewrite this equation in the following form:

$$E(\omega_o) = E * \left(1 + \left(\frac{\omega_r}{\omega_o}\right)^2\right) * \left(\frac{\omega_r}{\omega_o}\right) / \left(\left(\frac{\omega_r}{\omega_o}\right)^2 - 1\right) \quad (26)$$

If we use substitution: $x = \frac{\omega_o}{\omega_r}$ then we get:

$$E(x) = E * \frac{1 + x^2}{x * (1 - x^2)} \quad (27)$$

5.2 Optimum minimum operating frequency

Let's select the minimum operating frequency $x = \frac{\omega_o}{\omega_r}$ in a such way that energy contained in the resonant tank achieves the minimum. Let's find the extreme value of $E(x)$:

$$\frac{dE(x)}{dx} = 0 \Rightarrow x^4 + 4 * x^2 - 1 = 0 \quad (28)$$

Solving this equation, we get:

$$x = \sqrt{-2 + \sqrt{5}} = 0.485 \quad (29)$$

When $\omega_o = 0.485 * \omega_r$ (30)

Then the resonant tank has the smallest resonant energy and the minimum size of the resonant component, so the optimum value is achieved.

5.3 Sensitivity of the optimum value

Let's have a look at the resonant tank average energy graph in Figure 14. Note that the curve is "pretty flat" around the lowest point. This indicates the low sensitivity to the minimum operating frequency, and gives us freedom to fine-tune components using some other criteria.

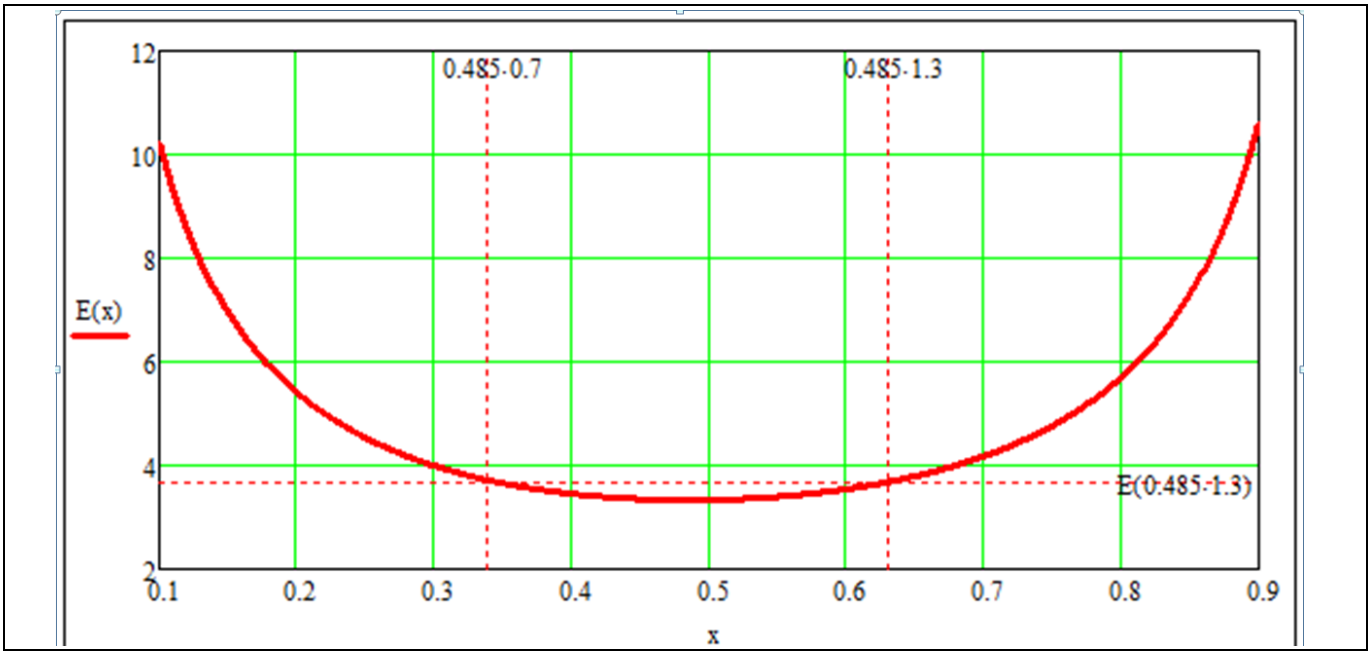

Figure 14 Resonant tank average energy versus minimum operating frequency

- Optimum minimum operating frequency $\omega_{o_op} = 0.485 * \omega_r$.
- If you select the minimum operating frequency in the range of $(\mathbf{0.7 * \omega_{o_op}, 1.3 * \omega_{o_op}})$ the size of tank will only change around 10%.
- You could say that size of the resonant tank is not too sensitive in this area.
- **Recommended operation range is** $\boldsymbol{\omega_o = (0.34 * \omega_r; 0.63 * \omega_r)}$.

Low sensitivity opens a new direction to investigate the behavior of the LLC converter in the area of the minimum operating frequency that can be determined. As the simulation shows, FHA gives component values that enable the LLC converter to transfer more power from a minimum input voltage than FHA predicts. This is the so-called "safe side" approximation.

6 Design procedure

6.1 Requirements

› **Topology: half- or full-bridge**

Full-bridge is recommended for high power, and half-bridge is recommended for medium and low power. Also, there is another option for high power: to use two interleaved half-bridges, or combine them in series on the primary and paralleled outputs with full-bridge drive.

› **Input voltage:**

- Maximum input voltage V_{i_max}
- Nominal input voltage V_{i_nom}
- Minimum input voltage V_{i_min}
- Peak input voltage ripple ΔV

The nominal input voltage is defined to help differentiate between modes of operation. The LLC converter operates with unity gain at the nominal voltage. Between V_{i_nom} and V_{i_min} the converter operates in boost mode, and between V_{i_nom} and V_{i_max} the converter operates in buck mode. The designer must use their judgment to select operating modes. Operating mode selection is affected by output voltage, output current and available component characteristics.

If the output current is high, SR MOSFETs are required at the output. If output voltage is low (like server power supplies with V_o = 12 V), it is good practice to use all three operating modes, because using buck mode helps to optimize RMS current and conduction losses. If output voltage is medium range (like telecom power supplies with V_o = 48 V), then it is good practice to avoid buck mode, because recovery of the MOSFET body diode will bring switching losses and ringing, and diminish benefits of lower RMS current. In this case, the best option is to use boost mode only.

Input voltage ripple (PFC bus voltage) needs to be taken into consideration, in such a way that the converter does not change operating mode during the high bus (V_{i_nom} + ΔV), unless buck mode is used as a normal operating condition. So, borderline voltage to select modes is (V_{i_nom} + ΔV).

› **Output voltage**

- Nominal output voltage V_o
- Nominal output current I_o

› **Operating frequencies**

- Resonant tank frequency f_r
- Minimum operating frequency f_{min}

The operating frequency depends on the components that the designer intends to use. For CoolMOS™ the nominal operating frequency range is between 100 kHz and 150 kHz, with f_{max} = 200 kHz to 250 kHz. For Trenchstop F5 IGBT nominal operating frequency is between 60 kHz and 70 kHz, with f_{max} = 120 kHz to 130 kHz. For SiC/wide-bandgap, nominal operating frequency is typically above 250 kHz, but note that performance becomes more dependent on SR capability.

The minimum operating frequency is selected as $f_{min} = f_r$ *0.485. This ratio provides the minimum size of the operating tank, in accordance with FHA. Also, this selection provides more than enough design margin. When the LLC calculator operates at minimum input voltage, it will have enough resources for the boost function. As mentioned, this condition can be optimized for a smaller tank size.

6.2 Strategy and design outputs

- LLC covers I/O voltage variations
  LLC max gain M_{max}:
  - $M_{max} = ((V_{i_nom}+\Delta V) / (V_{i_min}- \Delta V)* (V_{o_max} / V_{o_min})$ (31)

- XFMR covers voltage scaling
  Transformer transfer ratio:
  - k = topology coefficient
  - k = ½ for half-bridge LLC
  - k = 1 for full-bridge LLC
  - **$n = k*((V_{i_nom}+ \Delta V)/ V_o)$** **(32)**

- Equivalent AC load reflected to the primary side:

$$R_{ac} = \frac{8}{\pi^2} * (\frac{V_o}{I_o}) \quad (33)$$

- Load angle:

$$\varphi_o = \operatorname{asin}\left(\frac{1}{Gmax}\right) \quad (34)$$

- Transformer magnetizing inductance:

$$Lm = \frac{R_{ac}}{2*\pi*f_{min}} * tan(\varphi_o) \quad (35)$$

- Resonant inductance:

$$L_r = L_m * \frac{cos^2(\varphi_o)}{\left(\frac{f_r}{f_{min}}\right)^2 - 1} \quad (36)$$

- Resonant capacitance:

$$C_r = \frac{1}{(2*\pi*f_r)^2 * L_r} \quad (37)$$

- m – factor:

$$m = \frac{L_r + L_m}{L_r} \quad (38)$$

- Q – factor:

$$Q = \frac{\sqrt{L_r/C_r}}{R_{ac}} \quad (39)$$

These equations are used as a foundation for the LLC calculator. The simplicity of the listed formulas enables Excel to be used for the LLC design calculator.

The LLC calculator comes together with this AN.

7 LLC calculator

Below is shown the main page of the calculator with key sections: inputs, outputs, transfer functions, adjustment and load variations:

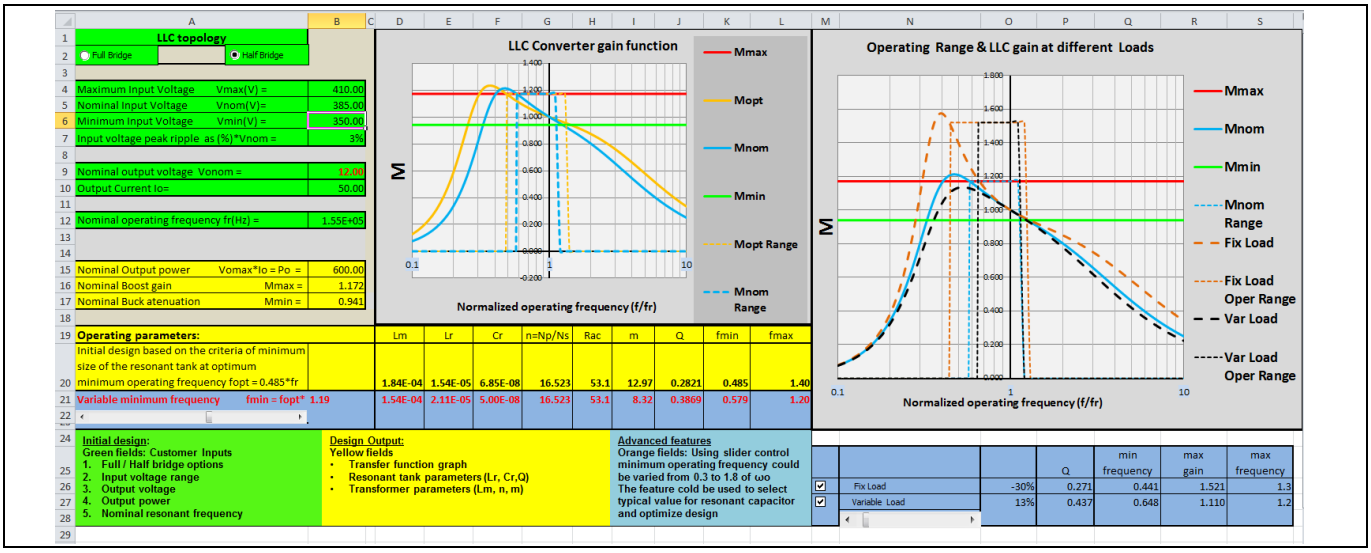

Figure 15 LLC calculator user interface

7.1 Inputs

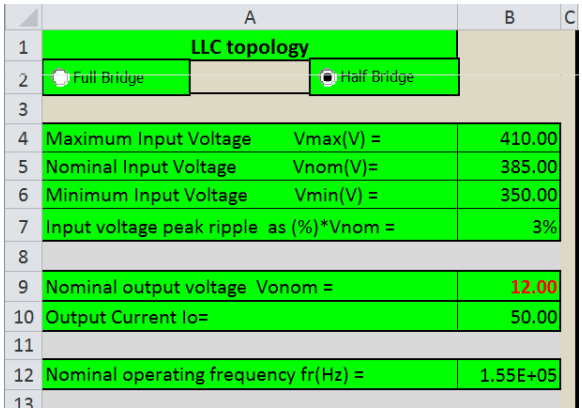

Inputs are marked in green.

i. Select topology with radio button.
ii. Provide input voltage range and ripple.
iii. Position V_{nom} to use appropriate operating modes.
iv. In order to avoid buck operating mode, use $V_{max} = V_{nom}$.
v. The nominal operating frequency depends on the type of components intended to be used.
vi. As a default, minimum operating frequency will be selected as 0.485* nominal frequency.

Figure 16 LLC calculator inputs

7.2 Outputs, transfer functions and adjustments

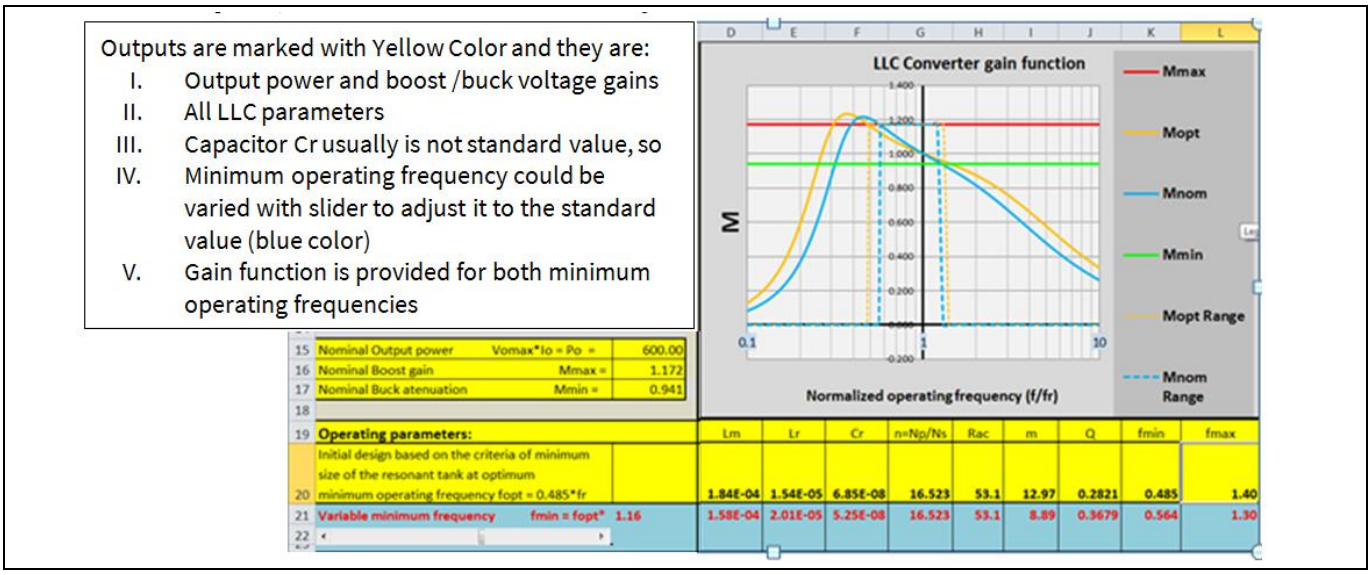

Figure 17 LLC calculator outputs

7.3 Load variations

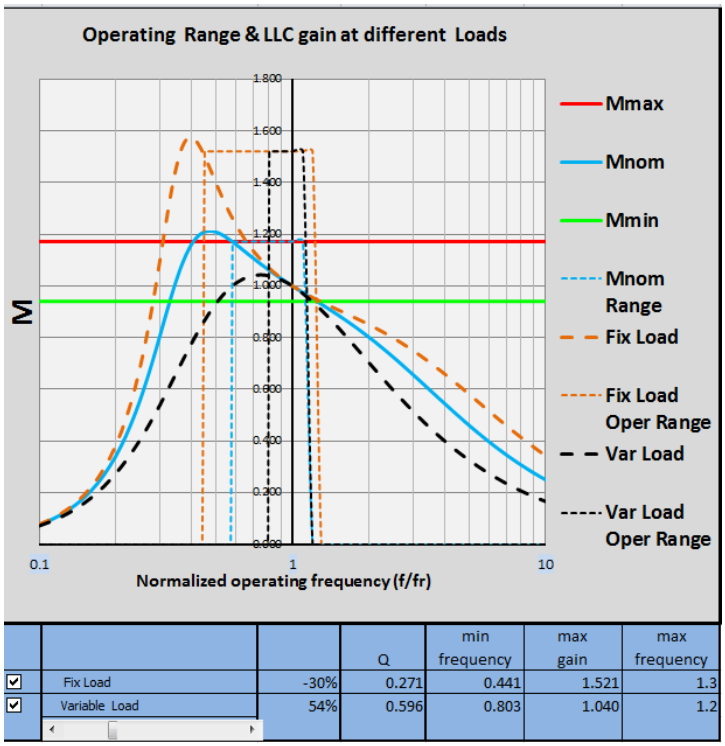

Load variations are marked in blue/gray.

I. LLC transfer function (gain) is based on the passive components and operating frequency.
II. When load changes, equivalent AC resistance R_{ac} changes accordingly.
III. R_{ac} change affects shape of gain curve.
IV. There are two optional curves that could be added on the graph using check boxes.
V. Fix load => type in the number in percentages, or
VI. there is a slider that enables continuous change of load.
VII. It is always good to check the shape of the gain curve at maximum and minimum loads.
VIII. Q-factor is also shown.

Figure 18 LLC calculator load variations

8 Summary

The essence of the the vector method is to follow the angle between voltage and current on the primary side of the LLC converter. The major benefit of this method is simplicity and clarity.

The vector method is based on the basic FHA and AC circuit analysis. The critical transfer point between inductive and capacitive mode is identified as a simple vector criteria where the inverse transfer function vector and the vector of serial combinations of load components are orthogonal.

Then the calculation procedure becomes straightforward. Key formulas are derived by using simple trigonometry, and the minimum operating frequency (ω_o) is such that it gives a minimum size for the resonant tank. Simple calculations further enable the design procedure:

1. Select the topology (half-bridge or full-bridge).
2. Provide I/O voltage ranges.
3. Use nominal input voltage to set operating modes (boost + buck, or boost only).
4. Provide the output current requirement.
5. Select nominal operating frequency.
6. The optimum minimum operating frequency will be selected by the calculator.
7. The LLC calculator will give LLC converter components.
8. In order to have C_r as a standard value, the calculator slider enables fine-tuning.

The transfer function variation as a function of load is also provided. It enables investigation of the min./max. load conditions.

9 References

[1] J. Hancock, M.Ivankovic, “LLC webinar series”, Infineon Technologies Power Academy, February 2017

[2] M. Ivankovic, F.Sawyer, “System and Method for LLC converter design”, US patent application, July 2016

[3] S. Abdel-Rahman, “Resonant LLC Converter – Design and Modeling”, Infineon Technologies AN2012-09, September 2012. Major changes since the last revision

[4] Anders Lind, “LLC Converter Design Note”, Infineon Technologies AN 2013-03

[5] F. Di Domenico, J.Hancock , A. Steiner, J. Catly, “600 W half-bridge LLC Evaluation Board with 600 V CoolMOS™ C7 and digital control by XMC”, Infineon Technologies AN, March 2016

Authors: Mladen Ivankovic, Jon Hancock

Revision history

Major changes since the last revision

Page or reference	Description of change

Trademarks of Infineon Technologies AG
µHVIC™, µIPM™, µPFC™, AU-ConvertIR™, AURIX™, C166™, CanPAK™, CIPOS™, CIPURSE™, CoolDP™, CoolGaN™, COOLiR™, CoolMOS™, CoolSET™, CoolSiC™, DAVE™, DI-POL™, DirectFET™, DrBlade™, EasyPIM™, EconoBRIDGE™, EconoDUAL™, EconoPACK™, EconoPIM™, EiceDRIVER™, eupec™, FCOS™, GaNpowIR™, HEXFET™, HITFET™, HybridPACK™, iMOTION™, IRAM™, ISOFACE™, IsoPACK™, LEDrivIR™, LITIX™, MIPAQ™, ModSTACK™, my-d™, NovalithIC™, OPTIGA™, OptiMOS™, ORIGA™, PowIRaudio™, PowIRStage™, PrimePACK™, PrimeSTACK™, PROFET™, PRO-SIL™, RASIC™, REAL3™, SmartLEWIS™, SOLID FLASH™, SPOC™, StrongIRFET™, SupIRBuck™, TEMPFET™, TRENCHSTOP™, TriCore™, UHVIC™, XHP™, XMC™

Trademarks updated November 2015

Other Trademarks
All referenced product or service names and trademarks are the property of their respective owners.

Edition 2017-08-25

Published by

Infineon Technologies AG

81726 Munich, Germany

© 2018 Infineon Technologies AG. All Rights Reserved.

Do you have a question about this document?

Email: erratum@infineon.com

Document reference
AN_201709_PL52_029

IMPORTANT NOTICE

The information contained in this application note is given as a hint for the implementation of the product only and shall in no event be regarded as a description or warranty of a certain functionality, condition or quality of the product. Before implementation of the product, the recipient of this application note must verify any function and other technical information given herein in the real application. Infineon Technologies hereby disclaims any and all warranties and liabilities of any kind (including without limitation warranties of non-infringement of intellectual property rights of any third party) with respect to any and all information given in this application note.

The data contained in this document is exclusively intended for technically trained staff. It is the responsibility of customer's technical departments to evaluate the suitability of the product for the intended application and the completeness of the product information given in this document with respect to such application.

For further information on the product, technology, delivery terms and conditions and prices please contact your nearest Infineon Technologies office (**www.infineon.com**).

WARNINGS

Due to technical requirements products may contain dangerous substances. For information on the types in question please contact your nearest Infineon Technologies office.

Except as otherwise explicitly approved by Infineon Technologies in a written document signed by authorized representatives of Infineon Technologies, Infineon Technologies' products may not be used in any applications where a failure of the product or any consequences of the use thereof can reasonably be expected to result in personal injury.