MERUS™ MA2304xNS Class-D audio amplifiers: EMC and output filter considerations

MERUS™ Class-D audio amplifiers

About this document

Scope and purpose

This application note provides a study and evaluation of the EMC/EMI behavior and output filter design recommendations for the MERUS™ MA2304xx amplifier family.

This application note briefly describes the theoretical background of EMC/EMI in Class-D audio amplifiers and provides measurements and case studies with output filter configurations and product setups that involve radiated and conducted emissions. Measurements are typically performed in a worst-case scenario basis (PVDD: 18 V, 2*10 W continuous output power) which makes this data useful in real product use cases.

Intended audience

This application note is intended for audio amplifier design engineers.

Table of contents

About this document **1**
Table of contents **2**
1 Introduction **4**
1.1 Electromagnetic compatibility 4
1.1.1 Radiated emissions 4
1.1.2 Conducted emissions 4
1.1.2.1 Differential mode 5
1.1.2.2 Common mode 5
1.2 Benefits of MERUS™ multilevel technology in EMC/EMI 6
1.2.1 Reduced out-of-band noise 7
1.2.1.1 Out-of-band noise test without filter 7
1.2.1.2 Radiated emissions tests with ferrite bead filter 8
1.2.2 Ultra-low idle power consumption even with ferrite filters 9
1.3 Modulation schemes and their differential and common-mode content 11
2 Quick start guide on filter design **13**
2.1 Quick recommendation chart – Filter type vs product application type 13
2.2 Quick filter selection and design procedure 15
3 Theoretical analysis and design of the recommended filters **16**
3.1 Differential analysis 16
3.1.1 Classic theory and 2nd-order systems 16
3.1.2 Is a R+C damping network necessary? 18
3.1.3 Resistive load vs real loudspeaker loads 18
3.1.4 Design parameters G_{max}, Fc, and C 19
3.2 Limits on capacitance and power mode profiles 20
3.2.1 Magnitude response of the recommended filter configuration 20
3.3 Common-mode analysis 21
3.4 Series resistance on capacitors with ferrite filter 23
4 Electrical performance and practical considerations **25**
4.1 Recommended part numbers 25
4.2 Capacitor effect on idle power consumption 25
4.3 Idle power consumption and noise performance of recommended LC filter configurations 25
5 Detailed case studies and EMC measurements **27**
5.1 Measurement methodology, setup, and conditions 27
5.1.1 Radiated measurement setup 27
5.1.2 Conducted measurements setup 28
5.2 Radiated emissions of ferrite filters on single amplifier 2*BTL 28
5.2.1 Ferrite comparison 28
5.2.2 Effect of cable lengths 28
5.2.3 Effect of shunt capacitor value 29
5.2.4 Effect of RC damping network 29
5.2.5 Effect of PVDD variation 30
5.2.6 Effect of MA2304xx drive strength control 31
5.2.7 Cable reflections 31
5.2.8 40 cm cable length measurements at different angles 32
5.2.9 2*25 W high continuous output power with ferrites beads 34
5.2.10 LC filter configurations with 60 cm speaker cable length 35
5.3 Conducted emissions 35
5.3.1 Ferrite filters - Effect of cable length 36
5.3.2 LC filter configurations 36
5.3.3 Ferrite filters - Effect of radiated emissions in conducted and the effect of a common-mode choke 37
5.3.4 Ferrite filters - Effect of a third shield cable to ground in a twisted pair 38

Table of contents

5.3.5 PWM-sync feature effect with multiple devices 39
References 40
Revision history 41
Disclaimer 42

1 Introduction

1.1 Electromagnetic compatibility

Electromagnetic compatibility (EMC) is a broad concept that covers the capability of electronic equipment and devices to operate only and exclusively as they were designed in a certain electromagnetic environment. This means that they should operate without causing interference to other devices and equipment and at the same time should not be disturbed by others. There are two cases to consider:

- **Electromagnetic interference (EMI):** Disturbance produced by the equipment under test.
- **Electromagnetic susceptibility (EMS):** Ability of the equipment under test to withstand electromagnetic disturbance generated by external devices.

This document covers EMI within Class-D amplifier technology.

EMI can be classified into two types of emissions:

- Radiated emissions
- Conducted emissions

1.1.1 Radiated emissions

These are radiated typically from a source that acts as an antenna into and/or through physical space or physical objects. In the United States, the Federal Communications Commission (FCC) establishes the maximum allowed radiated emissions in the 30 MHz to 1000 MHz range [3], while in the European Union (EU), these limits are established by the International Special Committee on Radio Interference (CISPR)[4].

Table 1 shows the limit comparison for the CISPR and FCC cases for radiated measurements.

Table 1 Radiated emission limits for multimedia residential equipment: FCC and CISPR

Frequency (MHz)	Emission limit (dBµV/m) @ 3 m distance	
	FCC (Class B)	CISPR 32
30–88	40	40
88–216	43.5	40
216–230	46	40
230–960	46	47
> 960	54	47

1.1.2 Conducted emissions

These are conducted through system cables. The main concern in Class-D amplifiers is the conducted emissions through AC powerline cables. The FCC and the CISPR establish the maximum allowed conducted emissions in the 0.1 MHz to 30 MHz frequency range – see Table 2.

Conducted emissions are classified into two:

- **Differential mode:** Current flows in the opposite direction in each conductor; therefore, there is a differential noise measured between both conductors.
- **Common mode:** Current flows in the same direction in each conductor; therefore, there is a common-mode noise measured in each conductor referenced to a ground plane.

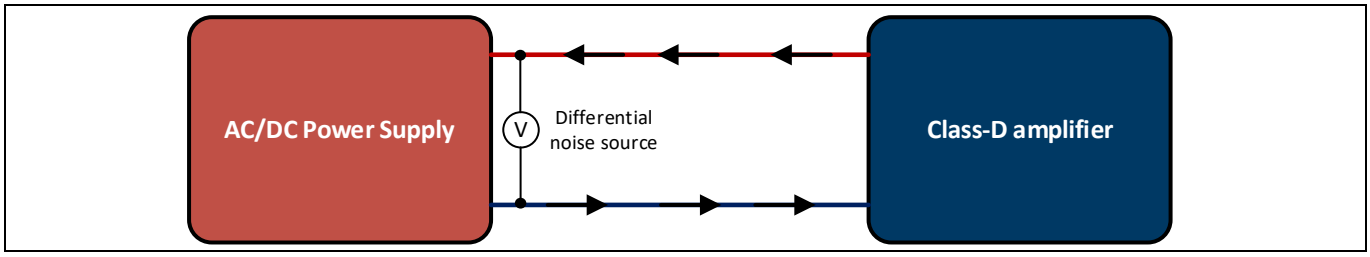

Figure 1 **Differential mode noise in conducted emissions. Current flows in the opposite direction in each conductor, hence there is a differential noise measured between both conductors.**

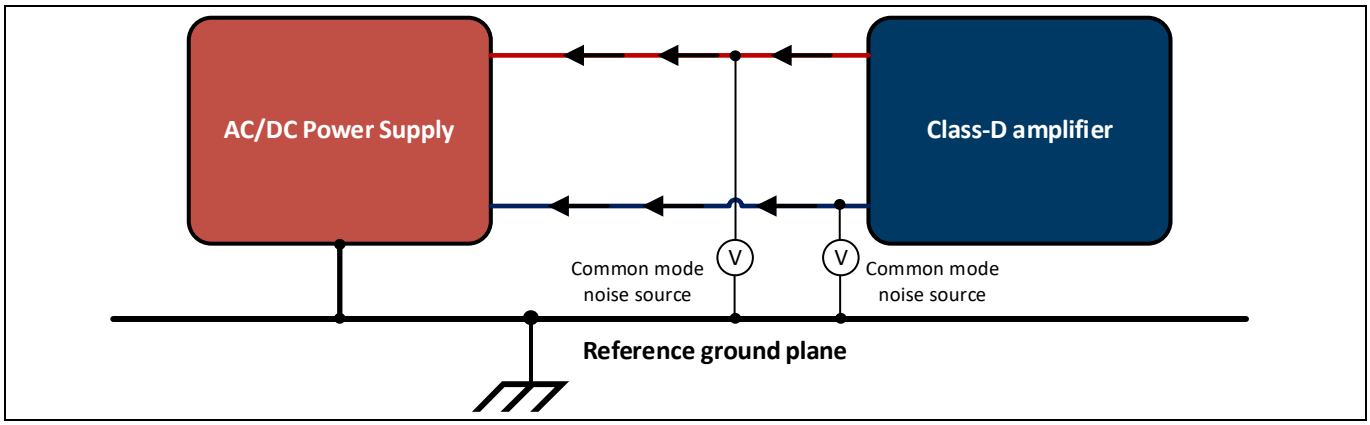

Figure 2 **Common-mode noise in conducted emissions. Current flows in the same direction in each conductor, hence there is a common-mode noise measured in each conductor referenced to a ground plane.**

1.1.2.1 Differential mode

Figure 1 shows how differential mode emissions typically behave in a mains-powered application (when the Class-D amplifier is powered by a 240 V/110 V AC/DC converter), where the Class-D amplifier is the noise source which disturbs the AC power lines through and additionally to the AC/DC power supply. The last one also acts as a disturbing source to the AC power lines.

In differential mode emissions, the noise current flows in the opposite direction in each power conductor (Positive = red, Return/Ground = blue). Therefore, a differential mode noise can be measured between both conductors.

1.1.2.2 Common mode

Figure 2 shows how common-mode emissions behave in the same application case. Here, the emitted noise current flows in the same direction in each conductor from the Class-D amplifier (source) to the AC/DC power supply. Therefore, the common-mode noise voltage can be measured from each conductor to a ground reference plane, which typically corresponds to the earth connection of a mains power socket. The measurements methods and recommended EMI filter for each type of emission are covered in the following sections.

Table 2 **Conducted emissions limit established by the FCC and the CISPR for multimedia residential equipment**

Frequency (MHz)	Emission limit (dBµV)	
	FCC and CISPR 32 (Class B)	
	Average	Quasi-peak
0.15–0.5	56–46*	66–56*
0.5–5	46	56
5–30	50	60

*Limit decreases linearly with log of frequency

1.2 Benefits of MERUS™ multilevel technology in EMC/EMI

The integrated power stage of MERUS™ multi-level amplifiers consists of two half-bridges with four power MOSFETs and a flying capacitor each. An intermediate voltage supply (PVDD/2) is generated over the flying capacitor's terminals, which together with the switching scheme of the MOSFETs result in a 2-phase PWM output with three voltage levels (0 V, ½ PVDD, and PVDD) rather than the conventional two.

If two half-bridges are combined into a bridge tie loaded (BTL) configuration, a 5-level modulation scheme is obtained. A BTL configuration is shown in Figure 3 in comparison with the traditional 2- and 3-level (in BTL) topology. Figure 4 compares the obtained switching waveform between traditional and multilevel topologies.

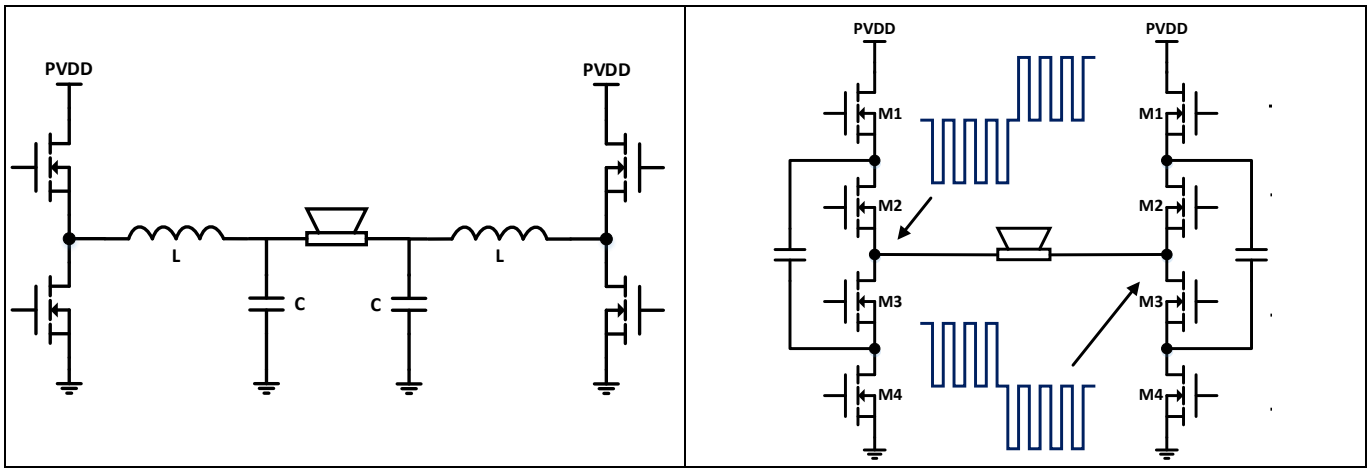

Figure 3 Output stages. Left: Traditional 2- and 3-level. Right: MERUS™ multilevel switching

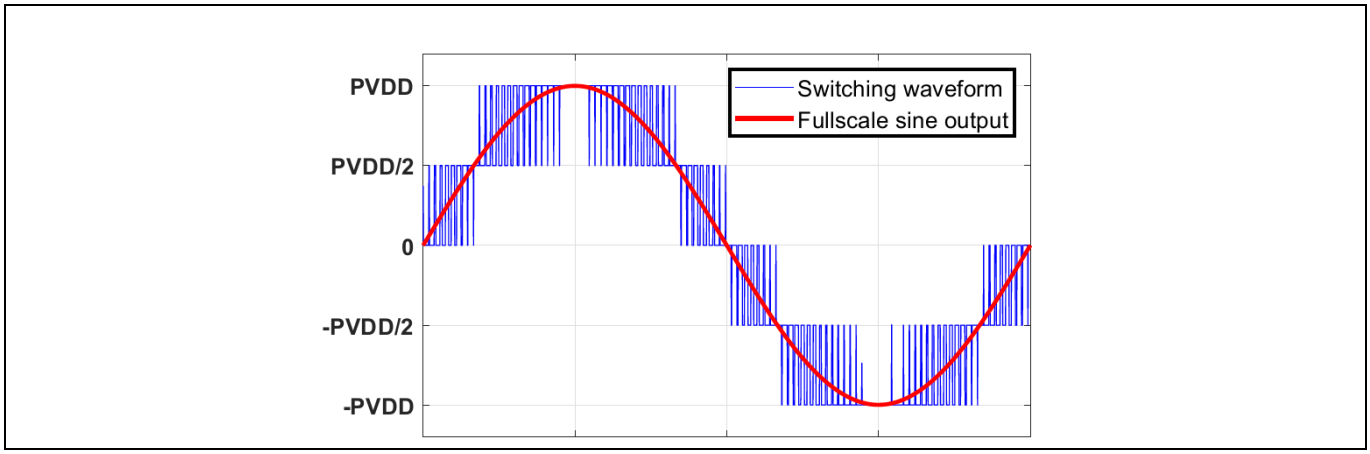

Figure 4 Switching output waveform of topologies. Left: Traditional 2- and 3-level. Right: MERUS™ multilevel switching

1.2.1 Reduced out-of-band noise

The benefit of multilevel switching into EMC lies in two main points. The first one is related to switching frequency. If a fixed switching frequency is considered for each transistor in each half-bridge in the output stage, then the effective switching frequency measured at the output node is doubled in the multilevel topology. In contrast, this is not the case for traditional 2 and 3 level modulation schemes as there are no multiplication of the transistor switching frequency at the output node. The second benefit lies in the voltage swing seen at the output node. While the switching voltage remains equal to PVDD in a traditional topology, it is actually halved in the case of multilevel.

These frequency multiplication and voltage swing reduction effects push the out-of-band noise to a higher band in the spectrum and at the same time it is reduced in terms of emitted power. This results in an increase of the cut-off frequency of the output filter; thus, the size and/or value of the filter components used will be significantly smaller than in traditional Class-D amplifiers. See Figure 5.

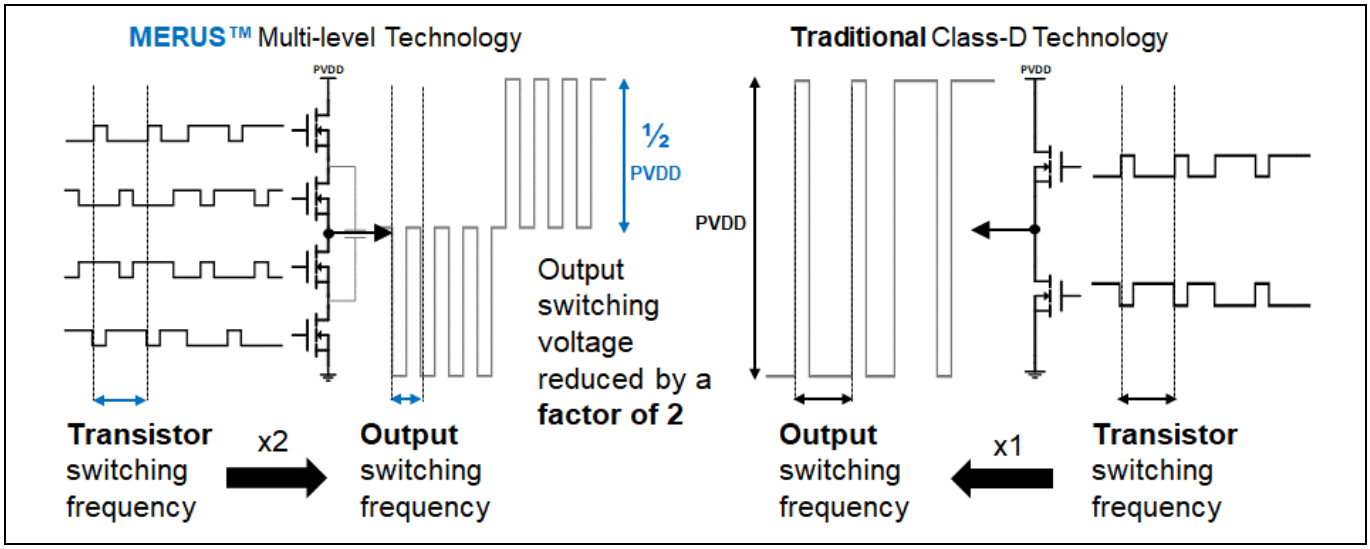

Figure 5 Frequency multiplication and voltage swing reduction effects at the Class-D amplifier output stages. Left: MERUS™ multilevel topology. Right: traditional 2 and 3 level topology

1.2.1.1 Out-of-band noise test without filter

Figure 6 illustrates these benefits in a real setup that shows a measurement of the out-of-band noise at 10 W*2 output power and PVDD = 18 V. The measurement compares one of the main traditional Class-D competitors with 2- and 3-level modulation and the MERUS™ MA2304DNS multilevel amplifier playing a pink noise signal. Output filters were taken out completely to keep the same measurement conditions. Multilevel technology achieves up to 10 dB better performance in the most critical EMI region from 20 to 50 MHz in terms of out-of-band noise.

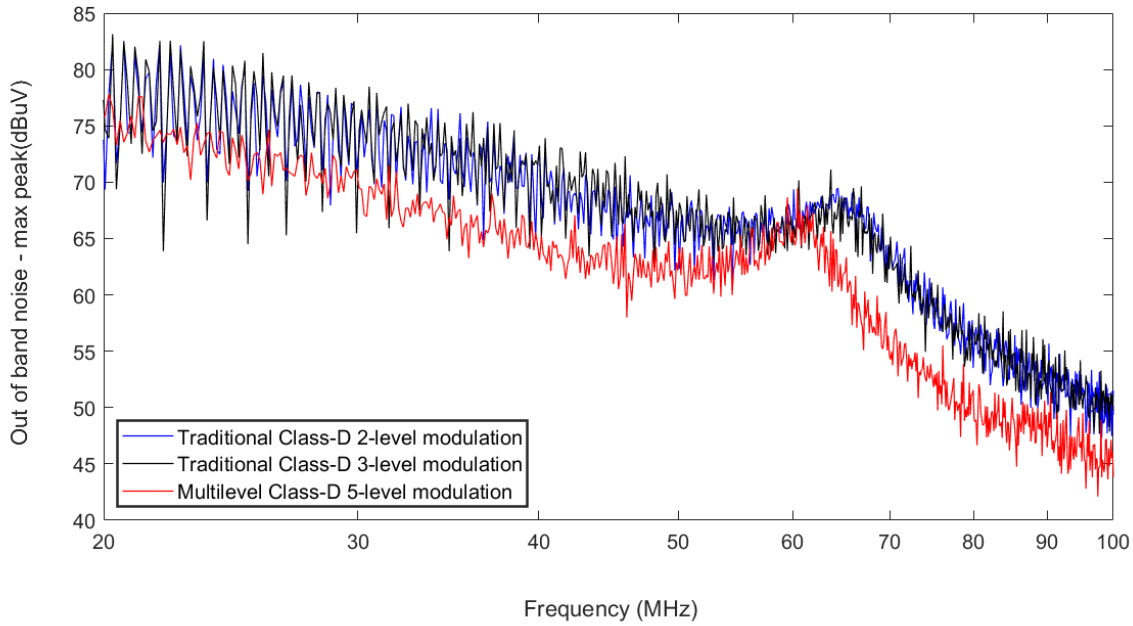

Figure 6 **Out of band noise measurement comparison between main competitor evaluation boards with 2 and 3 level modulation schemes and MERUS™ MA2304xNS multilevel amplifier evaluation boards. Output power: 10 W*2 continuous. Supply voltage (PVDD): 18 V. No output filters**

1.2.1.2 Radiated emissions tests with ferrite bead filter

Figure 7 shows a radiated emissions measurement comparison between a traditional class-d competitor with BD (3-level) modulation and the MERUS™ MA2304xNS audio amplifiers where differences of up to 20 dB of better margin are observed with multilevel technology.

The exact same conditions were used in this measurement: A ferrite filter consisting of an NFZ2MSD150SN10L ferrite bead plus a 220-pF capacitor, PVDD = 18 V, output power = 2*10 W, signal source: pink noise with 6 dB of crest factor and a 20 cm speaker cable length. Both devices were measured in the same PCB maintaining minimum differences in layout as possible.

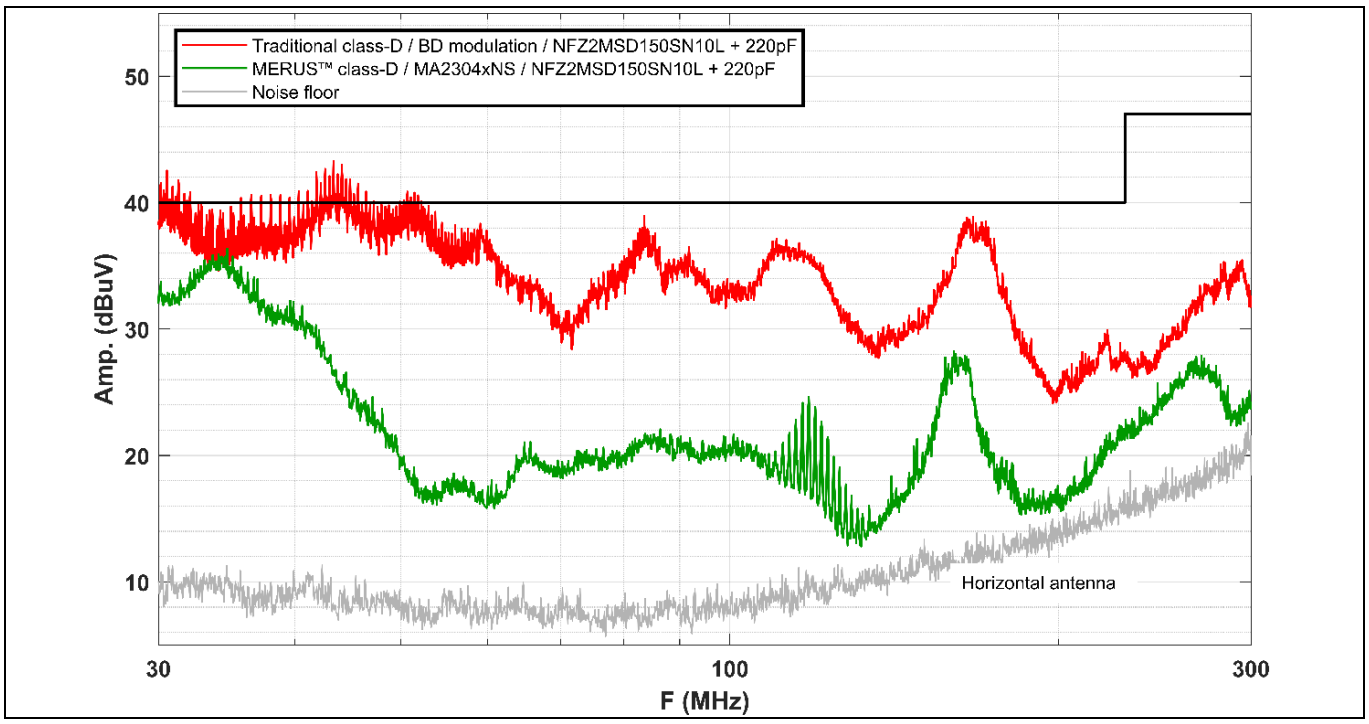

Figure 7 **Radiated emissions measurement comparison between main competitor with traditional BD modulation and MERUS™ MA2304xNS multilevel amplifier. Output power: 10 W*2 continuous @ 4 Ω loudspeakers. Supply voltage (PVDD): 18 V. Ferrite filters. 6 dB crest factor pink noise as test signal. Horizontal antenna. 20 cm speaker cable length**

1.2.2 Ultra-low idle power consumption even with ferrite filters

Multilevel switching is able to maintain ultra-low idle power consumption even when a ferrite filter is used. Traditional Class-D audio amplifiers and main competitors can pass EMI regulations with ferrite filters. However, such compliance is valid only for very short cable lengths and limited power, and comes with a significant penalty in idle power consumption.

In MERUS™ multilevel technology, low idle power consumption with ferrite filters is achieved because there is negligible switching activity at the output nodes when idle [5]. This happens due to the following two mechanisms:

- Elimination of idle conduction and magnetic losses in the power stage, filter, and speaker (which are inefficient loads).
- Reduction of capacitive switching losses due to the inherent frequency multiplication which is used to scale down the MOSFET switching frequency (explained in the previous section).
- Another way to see this benefit is taking a look to the ripple current in both traditional 2 and 3 level modulation and in 3 and 5 level MERUS™ topologies (see Figure 8). Note that in idle (duty cycle = 0.5) state, traditional 2-level modulation has maximum ripple current while 3- and 5-level MERUS™ topologies have minimum ripple. Main competitors with traditional modulation schemes require a very high inductance in the output filter (≥ 10 µH) to minimize this ripple. If not, this ripple current will flow through the speaker load, dissipating unnecessary output power.

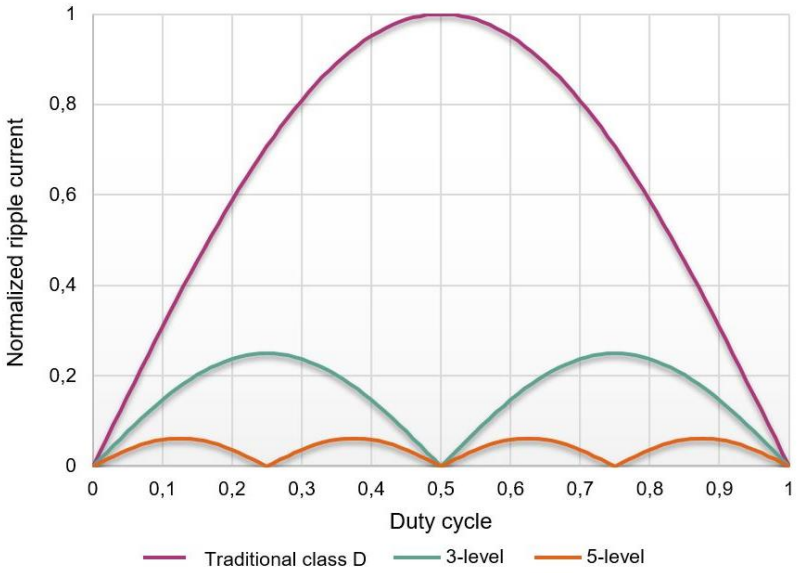

Figure 8 **Inductor/ferrite ripple current comparison between 2-level traditional Class D amplifiers and 3- and 5-level MERUS™ amplifier**

1.3 Modulation schemes and their differential and common-mode content

MA2304xNS supports 5-level (default) and 3-level modulation schemes which are experimental. Their differential and common-mode content seen at the load is illustrated in Figure 9.

The 5-level modulation scheme produces an effective switching frequency seen differentially at the load that is four times the PWM switching frequency. On the other hand, it contains some common-mode content, although its magnitude is significantly lower in comparison to classical 3-level (BD) modulation. The effective switching frequency seen in common mode is two times the PWM switching frequency. The MERUS™ 5-level modulation provides the best EMC and efficiency performance for most applications, and this is why is the default choice for MA2304xNS in low power consumption (LPC) and high audio performance (HAP) power mode profiles (PMP).

Additionally, MA2304xNS provides an experimental 3-level modulation scheme that is common-mode-free in contrast to classical 3-level (BD) modulation. In this case, radiated emissions are similar to the 5-level modulation scheme but conducted emissions are reduced. Another difference between 3- and 5-level modulation lies in the efficiency performance, where the 3-level modulation results in slightly higher switching losses. Table 3 shows the available power mode profiles of MA2304xNS, their modulation characteristics, and their configuration settings. Note that 3-level modulation requires to write value ‘0’ to the register address ‘0X00A5’.

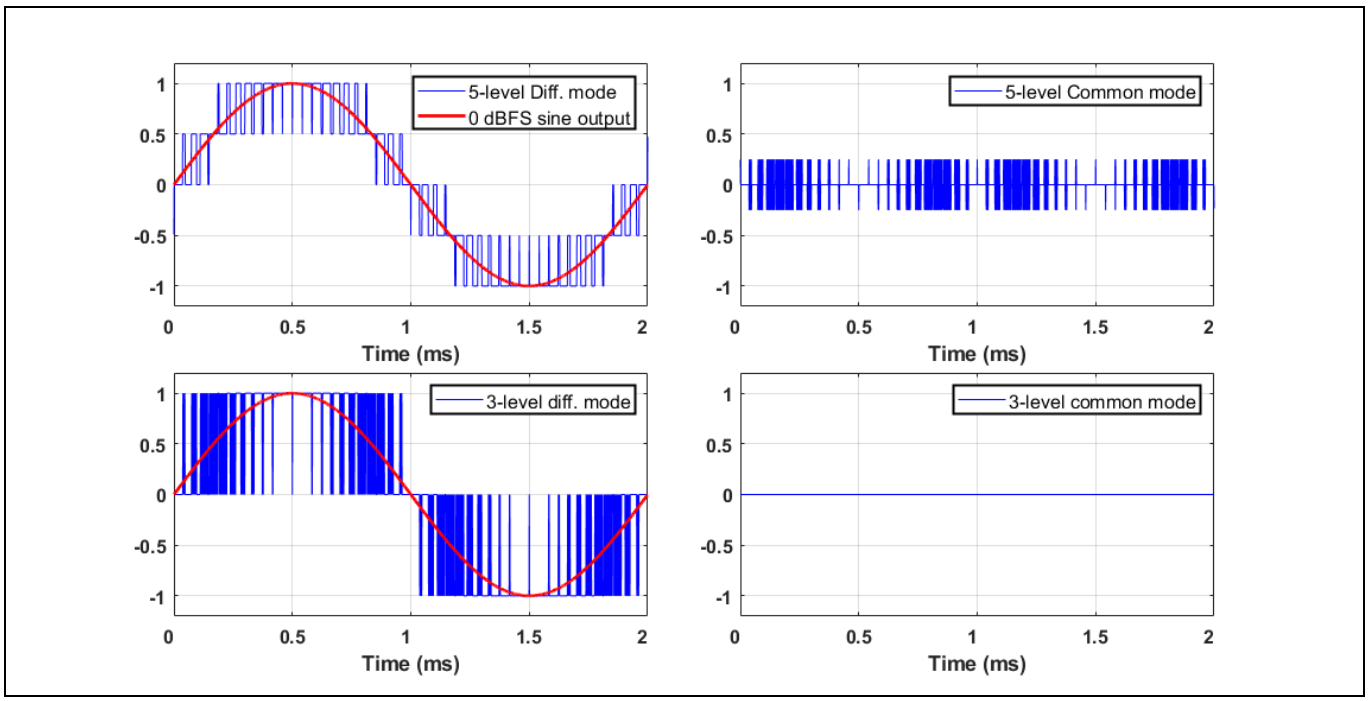

Figure 9 5-level and 3-level modulation schemes of MERUS™ MA2304xNS. Differential and common-mode content

Table 3 Power mode profiles (PMPs) description of MA2304xNS (Note that 3-level modulation requires to write value ‘0’ to the register address ‘0X00A5’)

PMP name	PMP number	PMP setting in address 0x0000 bits 2:0	Modulation scheme	PWM switching frequency (low–high power)	Effective switching frequency seen at the load (low–high power)
LPC	2	‘010’	5-level	125–256 kHz	512–1024 kHz
NA	3	‘011’	3-level	125–256 kHz	256–512 kHz
HAP	4	‘100’	5-level	256 kHz	1024 kHz
NA	5	‘101’	3-level	256 kHz	512 kHz
NA	6	’110’	5-level	256–512 kHz	1024–2048 kHz

2 Quick start guide on filter design

2.1 Quick recommendation chart – Filter type vs product application type

Table 4 shows the recommended output filter configurations according to the application type and speaker cable length. The table serves as a quick consultation guide for engineers and product designers who want to have a brief understanding about where to point their filter design but may not have the time to cover the entire application note. However, it is strongly recommended to review the full application note.

Each product design is different from each other, and test results might change according to a broad range of root causes such as measurement methodology, PCB and layout design, component manufacturers, and tolerances. Figure 10 shows the names of the components.

Power supply design must be given special attention as conducted emissions test results are significantly affected by its design, topology, and internal filtering. The columns that indicate a suitable output power for each different filter type are an approximate indication with the objective of avoiding undesired results in conducted emissions with generic or off-the-shelf DC power supplies. Emissions are typically affected by the continuous or average output power. The peak power values consider music or pink noise playback with 8 dB crest factor. Passing conducted emissions in mains-powered applications with ferrite beads or small inductors at higher power levels is possible, but requires careful power supply selection and/or design. For some examples of recommended power supplies, see Conducted emissions.

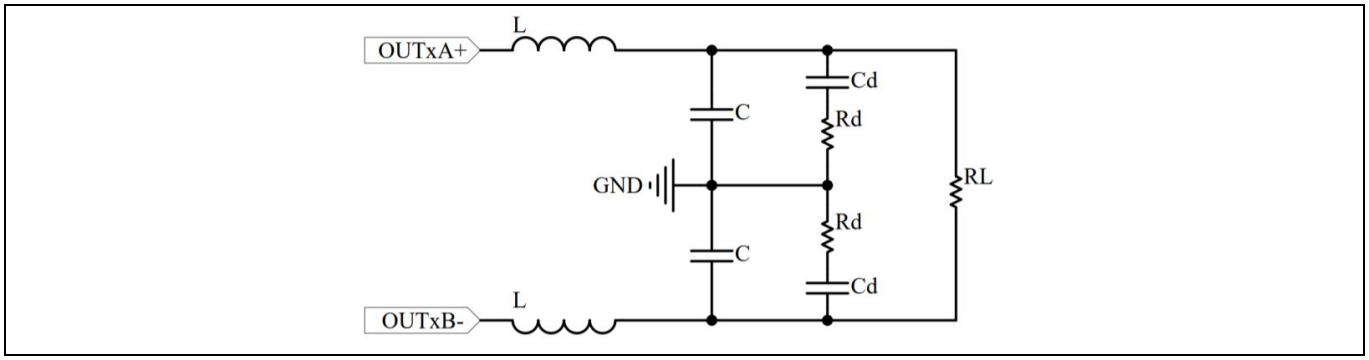

Figure 10 BTL output filter configuration

Table 4 **Recommended output filter configurations for MA2304xNS depending on cable length and application. Emissions are typically affected by the continuous output power. The peak power values consider music or pink noise playback with 8 dB crest factor.**

Config Nr.	Cable length (x cm)	Filter type	L	C	Rd+Cd	~Total output power @ 2 Ω		~Total output power @ 4 Ω		~Total output power @ 8 Ω		Comment (see Table 5)
						Cont.	Peak	Cont.	Peak	Cont.	Peak	
1	x ≤ 15 cm	Ferrite	NFZ2MSD150SN10L	220 pF	-	≤5 W	≤16 W	≤10 W	≤32 W	≤20 W	≤40 W	1
2	x ≤ 15 cm	Ferrite	NFZ2MSD301SZ10L	150 pF	-							
3	15 cm < x ≤ 20 cm	Ferrite	NFZ2MSD150SN10L	470 pF	-							2
4	20 cm < x ≤ 40 cm	Ferrite	NFZ2MSD150SN10L	1 nF	-							
5	40 cm < x ≤ 60 cm	LC	3.3 µH	470 pF	1 nF + 220 Ω							3
6	x > 60 cm	LC	4.7 µH	1 nF	10 nF + 100 Ω							4
7	x > 60 cm	LC	6.8 µH	10 nF	100 nF + 22 Ω	>5 W	>16 W	>10 W	>32 W	>20 W	≤40 W	
8	x > 60 cm	LC	6.8 µH/10 µH	100 nF/220 nF	1 µF + 10 Ω							5

Table 5 Key considerations on recommended output filter configurations of Figure 4

	Comments
1	If extra 3 dB to 5 dB attenuation is necessary in the 30 MHz to 50 MHz region, a damping network of Rd+Cd = 47 Ω + 1 nF or Rd+Cd = 27 Ω + 1 nF may be used. Cable lengths of 40 cm are possible with PVDD = 15 V. See Effect of RC damping network and Effect of PVDD variation.
2	Cable lengths of 40 cm to 60 cm might be possible with lower capacitance values depending on cable orientation. See Effect of cable lengths and Figure 28. In mains-powered applications, depending on the power supply design, a common-mode choke might be required between the amplifier and the power supply. See Ferrite filters - Effect of radiated emissions in conducted and the effect of a common-mode choke.
3	Lower cost LC option.
4	Optimal LC option for idle power consumption and noise. See Idle power consumption and noise performance of recommended LC filter configurations.
5	Optimal LC options for idle power consumption and noise. See Idle power consumption and noise performance of recommended LC filter configurations. The 6.8 µH/10 µH + 100 nF/220 nF configuration is recommended when the emissions from the power supply and its internal filters are unknown and suppression is required as well above 150 kHz. 6.8 µH + 100 nF may require use of PMP 6.

2.2 Quick filter selection and design procedure

1. Select a filter from Table 4 according to the application and loudspeaker cable length.
2. If the power supply's emissions and filtering are unknown, a safe choice is typically Configuration 14 from the same table which provided the lowest cut-off frequency and highest suppression above 150 kHz at the expense of a higher cost and PCB area.
3. To optimize or modify the selected filter or design a different one, proceed to a simple SPICE simulation.
4. Simulate the filter with an inductive load equivalent to the loudspeaker load. If the value is unknown, 22 µH is a good minimum value.
5. Select L and C values according to the amount of suppression required in the frequency region of interest. Consider and use G_{max} (Table 6) and the capacitance limits (Table 7) as design parameters. L and C must not be chosen arbitrarily. It is also strongly recommended to use an Rd+Cd damping network (Figure 10) where Cd should be between two and ten times the value of C.

3 Theoretical analysis and design of the recommended filters

3.1 Differential analysis

3.1.1 Classic theory and 2nd-order systems

Figure 11 shows the output filter configuration for a BTL channel where OUTxA+ and OUTxB- correspond to positive and negative output nodes of the MA2304DNS amplifier. L may be an inductor or ferrite bead depending on the case and the damping network Cd+Rd may be used as well depending on the application, required damping, and suppression of the filter. Speaker load is represented as RL.

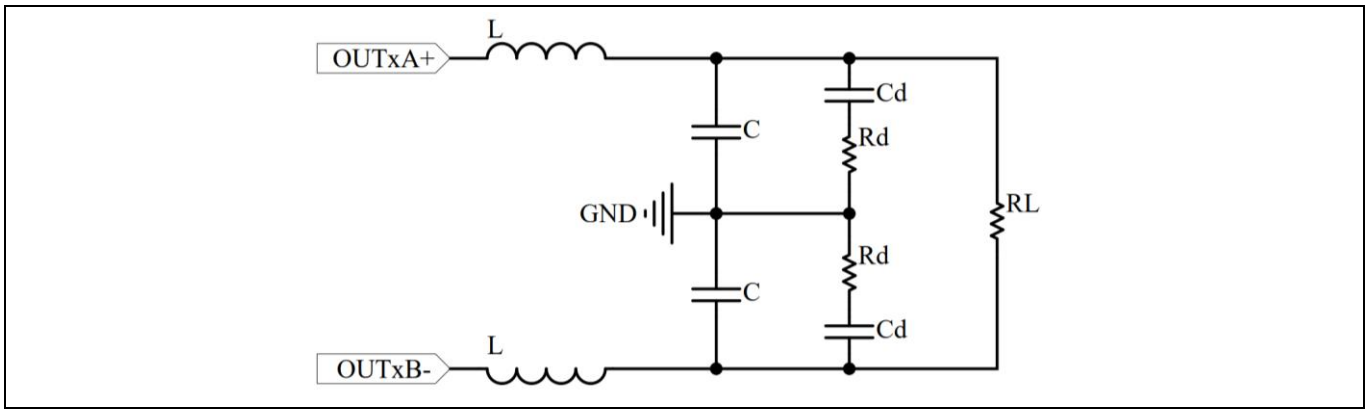

Figure 11 BTL output filter configuration

In principle, if the damping network Cd+Rd is ignored, and the input voltage of the filter is measured differentially between OUTxA+ and OUTxB-, the differential magnitude response measured across RL can be found in traditional filter theory literature such as [7] and [8] and it is described in Equation 1. It follows a typical second-order system.

$$|H(j\omega)|_{dB} = 20log_{10}\left(\frac{{G_0}\,{\omega_0}^2}{\sqrt{\omega^4 - 2\omega^2\,{\omega_0}^2\left(1-\frac{1}{2Q^2}\right)+{\omega_0}^4}}\right)$$

Equation 1

Here:

- ω, the angular frequency in rad/s
- f, the frequency in Hz
- G_0, the absolute amplitude at $\omega = 0$
- ω_0, the pole angular frequency
- Q, defined as the quality factor
- f_{max}, the frequency at maximum amplitude
- $G_{\max(dB)}$, the maximum amplitude
- f_c, the cut-off frequency where attenuation of -3 dB is reached

The relationships and definitions are provided in equations Equation 2 to Equation 7.

$$\omega = 2\pi f$$

Equation 2

$$Q = \frac{RL}{2}\sqrt{\frac{C}{L}}$$

Equation 3

$$G_{\max(dB)} = 20log_{10}\left(\frac{G_0 Q}{\sqrt{1-\frac{1}{4Q^2}}}\right)$$

Equation 4

$$f_0 = \frac{1}{2\pi\sqrt{LC}}$$

Equation 5

$$f_c = f_0\sqrt{\left(1-\frac{1}{2Q^2}\right)+\sqrt{\left(1-\frac{1}{2Q^2}\right)^2+1}}$$

Equation 6

Figure 12 shows an example of the magnitude response of f_0 = 100 kHz and for Q value cases of 0.35, 0.707, and 1.5.

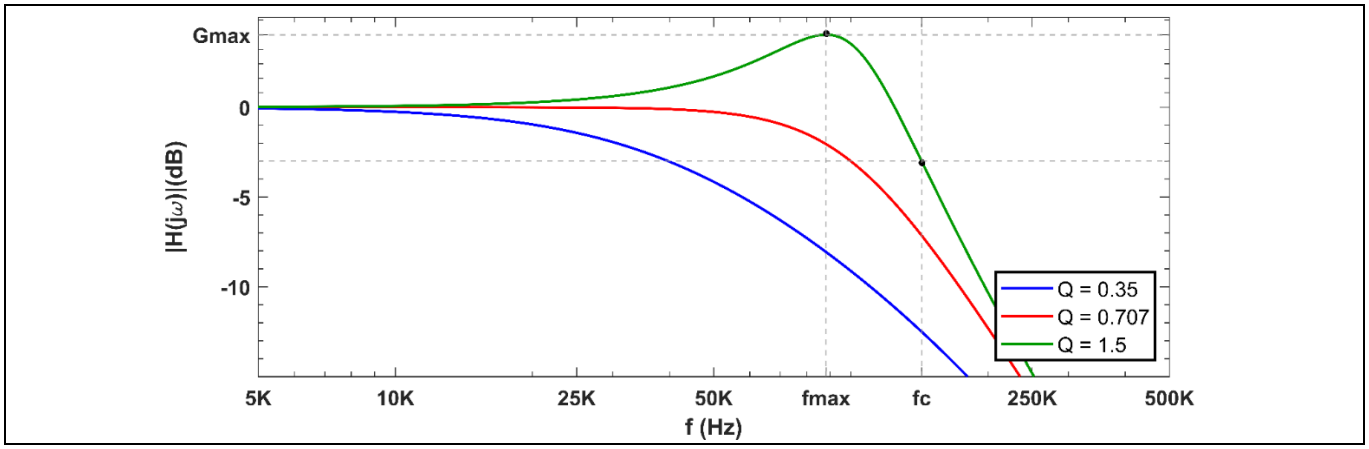

Figure 12 Example of the magnitude response of the second order filter of Equation 1 calculated for different Q values and f0 = 100 kHz.

A target of Q = 0.707 is recommended and should be always followed because it corresponds to a second-order flat Butterworth alignment [7]. However, it is important to note that this is only a target and

a perfect Q = 0.707 is not always possible due to standard component values and due to the fact that a loudspeaker load is not a pure resistive load

3.1.2 Is a R+C damping network necessary?

MERUS™ multilevel amplifiers do not necessarily need an f_c or f_0 much lower than 150 kHz like traditional 2-level or 3-level amplifiers to pass conducted or radiated emissions tests. Thus, the size of the inductor, which is the most expensive component in the output filter can be reduced drastically. Here is where an R+C damping network becomes useful.

A damping network is necessary because of the following reasons:

- It is hard to achieve a Q = 0.707 with an inductor much lower than 10.
- The Q achieved in the common-mode response of the filter.

This is analyzed in detail in Common-mode analysis. Resistor Rd will provide a resistance low enough to damp the ringing close to f_0 and Cd will prevent a low load below f_0 that might generate unnecessary power losses at a very low cost.

When adding a damping network Cd+Rd, the Q will be reduced significantly; it is not possible to calculate it directly any more with Equation 3. However, as Cd will be typically at least twice the size of C and even more in majority of the cases, the impedance of Cd at frequencies close to f_0 becomes much lower than Rd and therefore, the circuit of Figure 10 can be approximated as the circuit as shown in Figure 13.

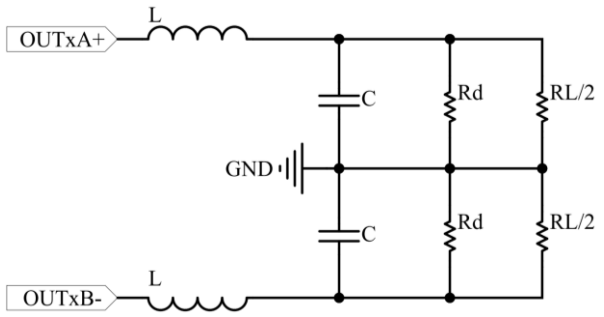

Figure 13 Equivalent circuit of the BTL configuration output filter close to f0 frequency region

As a result, the new Q value can be approximated with Equation 7. An R+C network is not strictly necessary; however, there are some considerations on idle power consumption, residual noise floor, and common-mode emissions. see Common-mode analysis.

$$Q = \left(\frac{RL}{2} \,||\, Rd\right)\sqrt{\frac{C}{L}}$$

Equation 7

3.1.3 Resistive load vs. real loudspeaker loads

The classic theory analysis in Classic theory and 2nd-order systems describes a very simple approximation of an LC filter response with a pure resistive load (RL). However, a real loudspeaker load is more similar to an inductive load; this has to be considered especially when f_c is close to 100 kHz and above. Series inductance in loudspeakers can vary from a few µH to several mH; therefore, the resulting quality factor Q is different from the Q factor obtained with a purely resistive load.

The easiest method to find the resulting Q factor is a simple spice simulation. Figure 14 shows a comparison of the resulting Q factor and magnitude response of an output filter with L=6.8 µH; C=10 nF; Rd = 47 Ω; Cd = 100 nF. Another effect that is typically observed from simulating the output filter magnitude response with an inductive or a speaker load is that the loss of high frequency below 100 kHz is more significant than the response simulated with a pure resistive load. In case of an end product, this loss will vary significantly with different loudspeaker loads and, in some cases, will be more similar to a resistive load and in others to an inductive load.

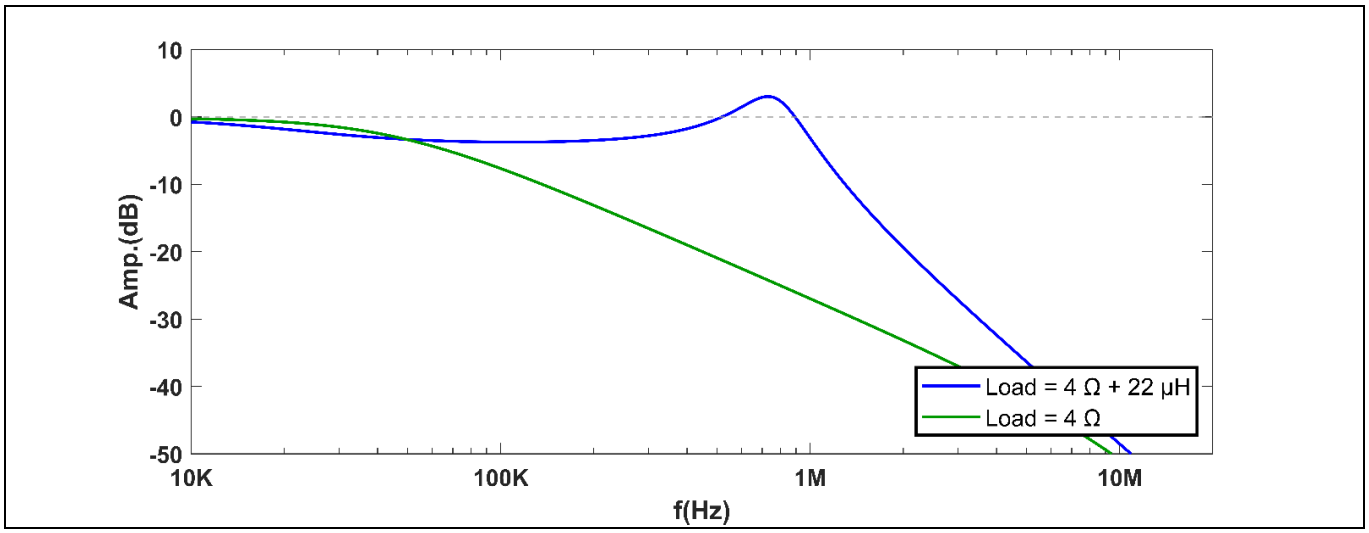

Figure 14 SPICE simulation comparison of an output filter with L = 6.8 µH, C = 10 nF, Rd = 47 Ω, Cd = 100 nF, with a resistive 4 Ω load and an inductive load of 4 Ω + 22 µH in series

3.1.4 Design parameters G_{max}, Fc, and C

The filter configurations of Table 4 cover most of the typical applications of MA2304xNS. However, if designs for different filter configurations are required, there are some important considerations and target parameters to consider to ensure stability, proper residual noise, and idle power consumption performance.

Once f_c has been selected to achieve the desired suppression in the desired frequency region, the next parameter to consider is the $G_{\max(dB)}$ (maximum amplitude at f_{max}). There is a limit of how much ringing should be targeted depending on the frequency region of f_{max}. Table 6 shows the recommended $G_{\max(dB)}$ that should be considered for different frequency regions with an inductive load of 4 Ω + 22 µH to 16 Ω + 22 µH.

Inductor saturation and load effect must be included in the filter design. The $G_{\max(dB)}$ limits shown in Table 6 do not mean that the amplifier is not able to operate with different values, but to maintain proper performance, final $G_{\max(dB)}$ values should be kept as close as possible to the recommended values.

Table 6 Recommended G_{max} of the output filter with a 4 Ω + 22 µH to 16 Ω + 22 µH load (differential mode)

f_{max}	G_{max}
> 10 MHz	Not critical
3 MHz < f < 10 MHz	< 10 dB
1 MHz < f < 3 MHz	< 6 dB
f < 1 MHz	< 4 dB

3.2 Limits on capacitance and power mode profiles

For the LC filter configurations of Table 4, there is a limit in the recommended amount of capacitance that should be used for each inductance value. This is also shown in Table 7. Additionally, for capacitance values higher than 100 nF, HAP power mode profile must be used.

Table 7 Effect of R+C damping network on 6.8 µH and 10 µH filter configurations on and idle power consumption. Load: 4 Ω + 22 µH. PVDD: 18 V. HAP mode measured in a sample evaluation board

Filter L	Capacitance limit	PMP
Ferrite	1 nF	LPC or HAP
3.3 µH	470 pF	LPC or HAP
4.7 µH	1 nF	LPC or HAP
6.8 µH	10 nF	LPC or HAP
6.8 µH	100 nF	HAP (may require PMP 6 depending on loudspeaker load)
10 µH	220 nF	HAP only

When higher capacitance values are required (for example, if more suppression is required), increase the inductance value above 10 µH. To maintain the same inductance value and increase the capacitor value, the switching frequency when playing above 1 W/ch of output power (at a 4 Ω nominal load) should be increased by changing the power mode profile to number 6, although this will have an impact on efficiency. This change can be done by writing the value to the register address shown in Table 8. Operation should be verified for a specific speaker load.

Table 8 Register address to change power mode profile to PMP 6

Register address	Bits	Value
0x0000	2:0	0x110

3.2.1 Magnitude response of the recommended filter configuration

The magnitude or frequency response of the recommended filters of Table 4 is shown in Figure 15. These responses were obtained with a simple SPICE simulation with an inductive load of 4 Ω + 22 µH. The quality factor (Q) of the ferrite bead filter is typically high due to the low inductance of the ferrite bead which results in a maximum $G_{\max(dB)}$ higher than 10 dB. This result is normal and expected; in general, it does not generate any issues with radiated emissions because f_c is higher than 30 MHz where the radiated emissions region starts.

Depending on the power supply design in main AC-powered products and on the cable length of the loudspeakers, a small R+C damping network that reduces $G_{\max(dB)}$ can help when extra margin is needed. This topic is covered with EMC measurements in Effect of RC damping network and Q factor and $G_{\max(dB)}$ are reduced while f_{max} and f_c become smaller for the recommended LC filter configurations of Table 6.

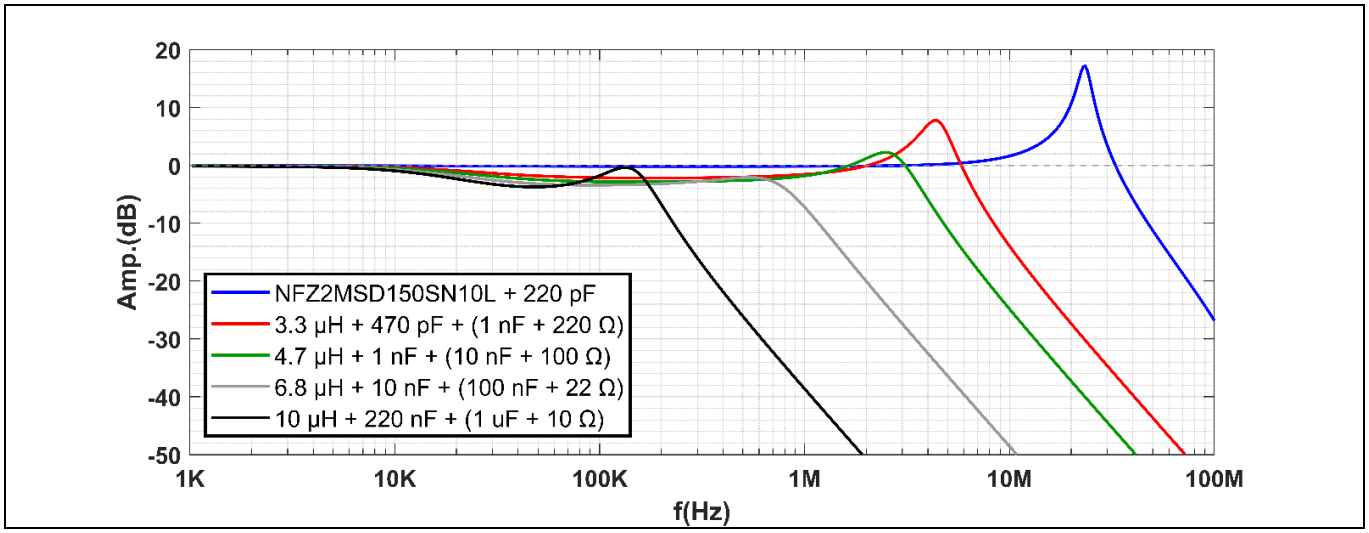

Figure 15 Simulated magnitude response of the recommended output filters of Table 4 with a 4 Ω + 22 µH load

3.3 Common-mode analysis

The common-mode response of the output filter is another aspect that must be considered when designing an LC filter and selecting its components. When analyzing the filter response in common mode, the differential load is not seen any more by the amplifier output and therefore, the filter configuration of Figure 10 can be modeled as Figure 16 shows:

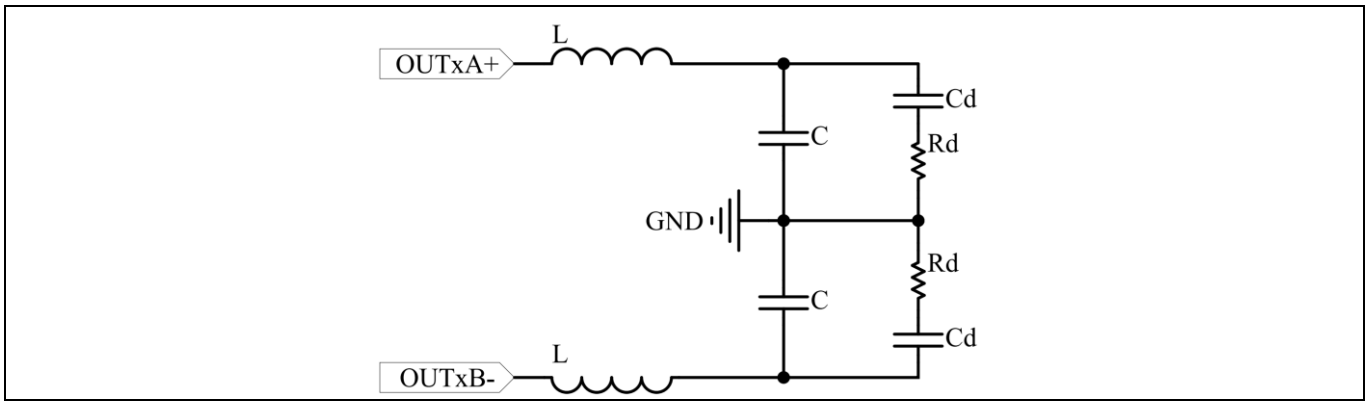

Figure 16 Common mode equivalent circuit of a BTL output filter

Figure 17 shows the common-mode response of the BTL output filter with and without the Rd+Cd damping network for a 6.8 µH + 10 nF filter values.

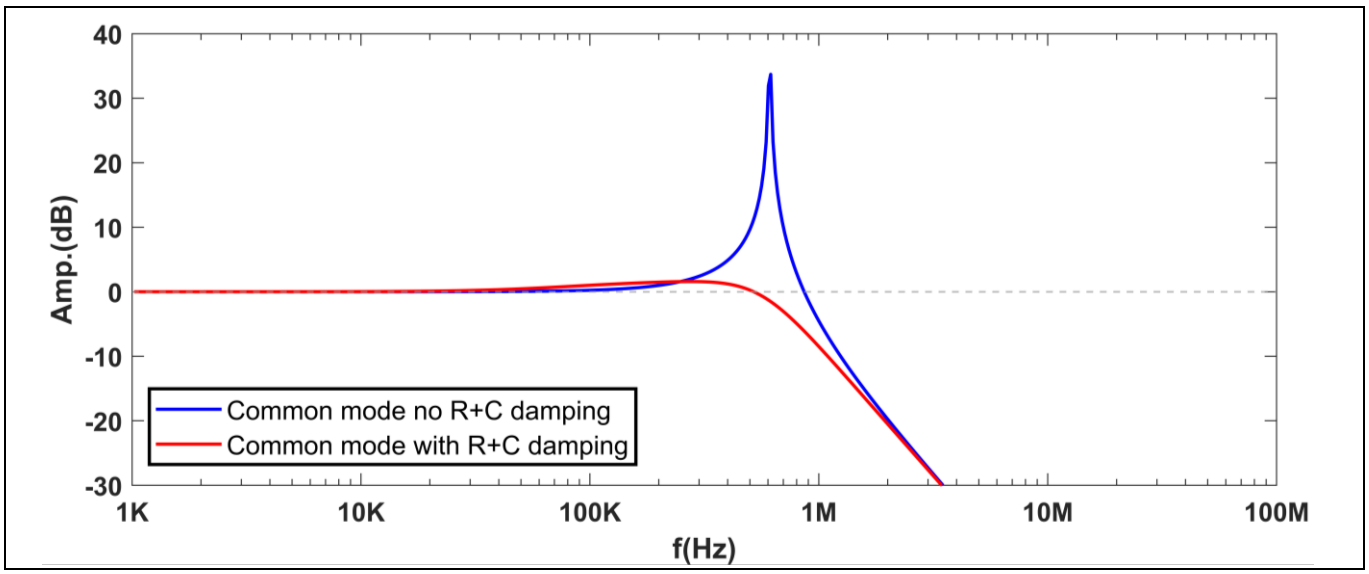

Figure 17 Comparison of the common-mode magnitude response of the LC filter configuration with 6.8 µH + 10 nF with and without an RC damping network.

The excessive gain or amplitude close to f_0 in the common-mode response without an R+C damping network may affect the performance in MA2304xNS amplifiers. The recommended filter configurations of 3.3 µH and 4.7 µH inductors are easy to implement with an R+C damping network as the size of the resistor needed or the power consumption on it will not be significant and therefore, the penalty in cost and size is not significant either.

If more suppression is necessary in conducted emissions due to lack of suppression of the power supply or in radiated emissions due to the excessive cable length, the filter configurations with 6.8 µH or 10 µH are the most suitable options. It is recommended to use an R+C damping network with these configurations to achieve the best performance. However, the size of Rd might have to be increased to an 0603 or an 0805 package depending on the amount of output power required and the current flowing through them. As a rule of thumb, the maximum amplitude close to f_0 should be below 30 dB (below 10 MHz) to ensure that there is no excessive idle current consumption on PVDD. If the addition of a damping network to the filter is not required, the amplifier can actually operate without it.

There are three main aspects to be considered when operating without an R+C network:

- The most sensitive one is idle power consumption
- The residual noise floor,
- The common-mode conducted emissions where the effect depends on the power supply design

Table 9 shows a comparison in a sample board where the idle power consumption and residual noise floor were measured with and without an R+C damping network in HAP mode of MA2304xNS.

Table 9 Effect of R+C damping network on 6.8 µH and 10 µH filter configurations on and idle power consumption. Load: 4 Ω + 22 µH. PVDD: 18 V. HAP mode measured in a sample evaluation board

Filter L+C	Rd+Cd	Total Idle power consumption (PVDD+VDD+VDD_IO)	Residual noise floor (20 Hz to 20 kHz A-weighted)
6.8 µH + None	None	74 mW	42 µVrms
6.8 µH + 10 nF	100 nF + 22 Ω	82 mW	42 µVrms
6.8 µH + 10 nF	None	96 mW	45 µVrms
10 µH + 220 nF	1 µF + 10 Ω	70 mW	42 µVrms
10 µH + 220 nF	None	> 100 mW	54 µVrms

The most noticeable case is the idle power consumption in the 10 µH + 220 nF filter configuration without a damping network. Although the penalty in idle power consumption is significant in comparison to the other filter configuration cases, this is still significantly below the traditional competitors operated in the same conditions.

3.4 Series resistance on capacitors with ferrite filter

In some cases, the ferrite bead and capacitor combination might generate a significant peak in the response due to lack of damping. This can be present specially when the capacitor value is close to 1 nF. In this case, the use of a small resistor in series with the capacitor of the filter can help in reducing the amount of peaking or G_{max}. An example schematic and comparison magnitude response is shown in Figure 18 and Figure 19.

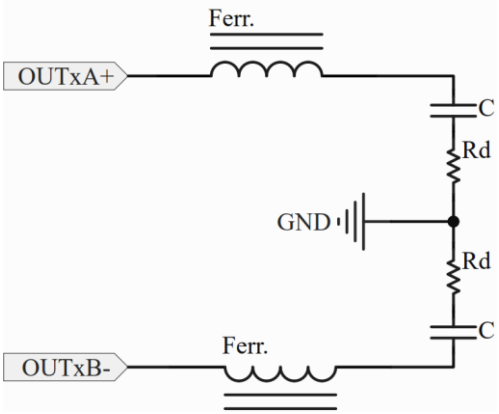

Figure 18 Filter schematic of a ferrite filter with added series resistance to the main capacitor

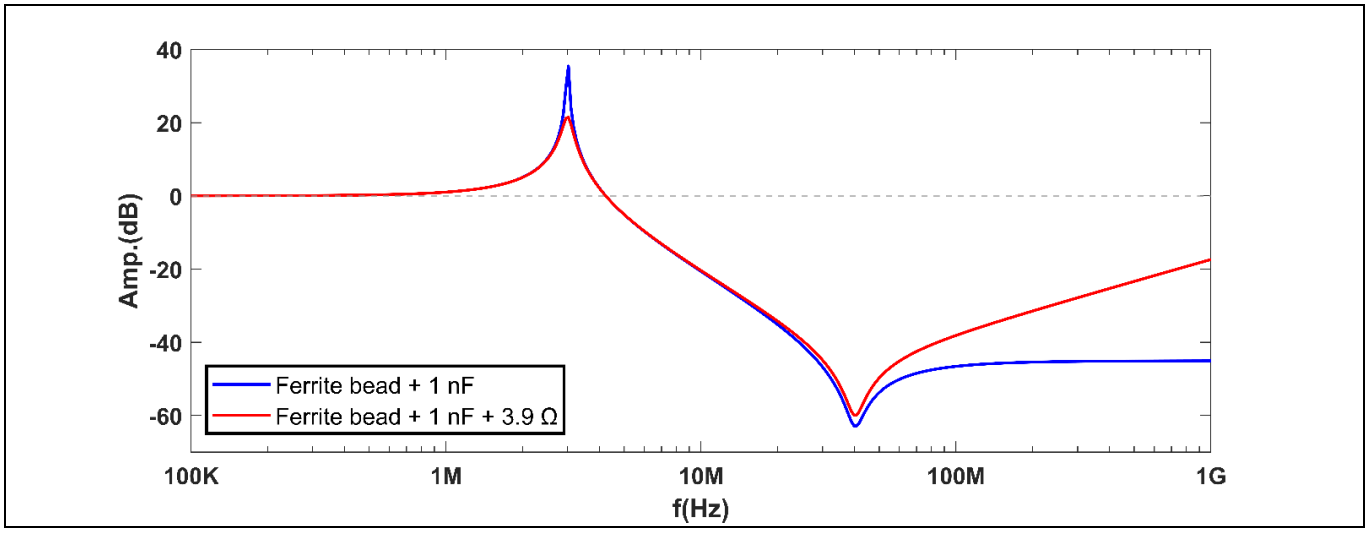

Figure 19 Magnitude response comparison of the ferrite filter with and without series damping resistance

This approach avoids the use of an extra Rd+Cd damping network, although there is a trade off with some suppression loss above 100 MHz. Typically, this is not an issue, as emissions from MERUS™ multilevel amplifiers are negligible above this frequency range. The value of the series resistance should be between 3 Ω and 5 Ω depending on the required suppression above 100 MHz.

4 Electrical performance and practical considerations

4.1 Recommended part numbers

Table 10 shows the recommended part numbers for the MA2304xNS output filter designs. All the electrical performance and EMC tests mentioned in this application note have been performed with these part numbers. The most important parameter to consider from the inductors is the saturation behavior. The inductance and temperature variation with the amount of current flowing through the components can impact the $G_{\max(dB)}$ parameter described in Design parameters Gmax, Fc, and C. The recommended parts are Murata 1267AY and 1274AS series that provide suitable saturation characteristics for most applications in BTL and PBTL amplifier configurations.

Table 10 Recommended part numbers for MA2304xNS output filter

Inductance or impedance	Manufacturer	MPN
180 Ω @ 100 MHz	Murata	NFZ2MSD150SN10L
300 Ω @ 100 MHz	Murata	NFZ2MSD301SZ10L
3.3 µH	Murata	1267AY-3R3N=P3
4.7 µH	Murata	1267AY-4R7N=P3
6.8 µH	Murata	1217AS-H-6R8N=P3
10 µH	Murata	1217AS-H-100M=P3

4.2 Capacitor effect on idle power consumption

Table 11 Idle power consumption comparison of an MA2304xNS sample device for different capacitance values in the output filter. Ferrite bead: NFZ2MSD150SN10L, PVDD: 18 V, VDD/VDD_IO: 3.3 V

C	PMP	IPVDD	Ivdd + Ivdd_io	Total idle power (PVDD+VDD+VDD_IO)
-	LPC	2.59 mA	3.66 mA	58.7 mW
100 pF	LPC	2.55 mA	3.61 mA	57.8 mW
220 pF	LPC	2.90 mA	3.61 mA	64.1 mW
470 pF	LPC	3.85 mA	3.64 mA	81.3 mW
1 nF	LPC	5.50 mA	3.63 mA	111.0 mW
-	HAP	3.40 mA	3.74 mA	73.5 mW
100 pF	HAP	3.60 mA	3.72 mA	77.1 mW
220 pF	HAP	3.81 mA	3.72 mA	80.9 mW
470 pF	HAP	4.24 mA	3.72 mA	88.6 mW
1 nF	HAP	5.80 mA	3.72 mA	116.7 mW

4.3 Idle power consumption and noise performance of recommended LC filter configurations

Table 12 Idle power consumption comparison of MA2304xNS sample for different LC filter configurations. PVDD: 18 V, VDD/VDD_IO: 3.3 V

L	C	RC-network	PMP	IPVDD	IVDD + IVDD_IO	Power	Residual noise 20 Hz - 20 kHz A-weighted
NA	NA	NA	LPC	2.11 mA	3.47 mA	49.4 mW	82 µVrms
3.3 µH	470 pF	1 nF+220Ω	LPC	3.53 mA	3.36 mA	74.6 mW	110 µVrms
4.7 µH	1 nF	10 nF+100Ω	LPC	3.60 mA	3.47 mA	76.3 mW	93 µVrms
6.8 µH	10 nF	100 nF+22Ω	LPC	3.24 mA	3.46 mA	69.7 mW	86 µVrms
10 µH	220 nF	1 µF+10Ω	LPC	NA	NA	NA	NA
NA	NA	NA	HAP	3.44 mA	3.59 mA	73.7 mW	49 µVrms
3.3 µH	470 pF	1 nF + 220Ω	HAP	5.23 mA	3.52 mA	105.8 mW	50 µVrms
4.7 µH	1 nF	10 nF + 100Ω	HAP	4.67 mA	3.63 mA	96.0 mW	45 µVrms
6.8 µH	10 nF	100 nF + 22Ω	HAP	3.91 mA	3.57 mA	82.2 mW	43 µVrms
10 µH	220 nF	1 µF + 10Ω	HAP	3.21 mA	3.49 mA	69.3 mW	48 µVrms

5 Detailed case studies and EMC measurements

5.1 Measurement methodology, setup, and conditions

5.1.1 Radiated measurement setup

The measurement results in the following sections were performed with two different main setups:

- **Setup A:** Consists of a certified CISPR 25 chamber with the antenna positioned at one-meter distance from the amplifier board under test due to the chamber size. Measurements obtained with this setup are typically less permissive than measurements at three meters distance. This setup does not use a rotating table.
- **Setup B:** Consists of a certified CISPR 32 type chamber with the antenna positioned at three meters distance from the amplifier board. This setup consists of a rotating table, where the amplifier board is positioned. In addition, two cable orientations were used as shown in Figure 20. Any other conditions follow the CISPR 32 standard.

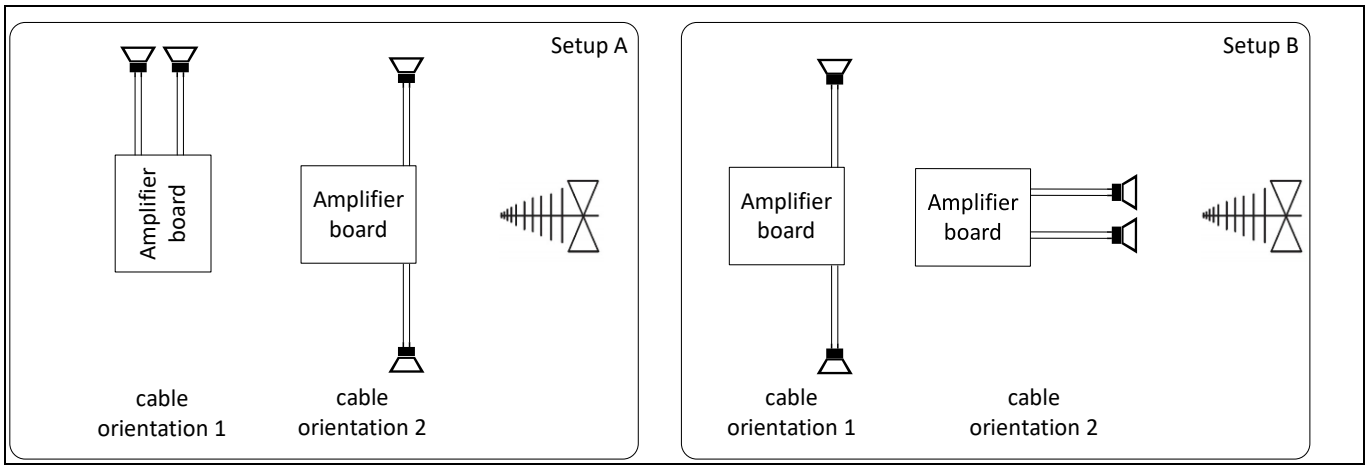

Figure 20 Cable orientation configurations for setups A and B

To be able to present several measurement cases and scenarios, setup A and cable orientation 1 were used in most of the measurements and comparisons. Setup A and cable orientation 2 as well as setup B are shown when relevant differences are found in the results.

5.1.2 Conducted measurements setup

Unless specified, all the results shown are peak voltage values as average and quasi-peak result values are always below the limits and are not a concern with the power supply utilized. Peak values represent the major concern and worst-case scenario in all the cases described below.

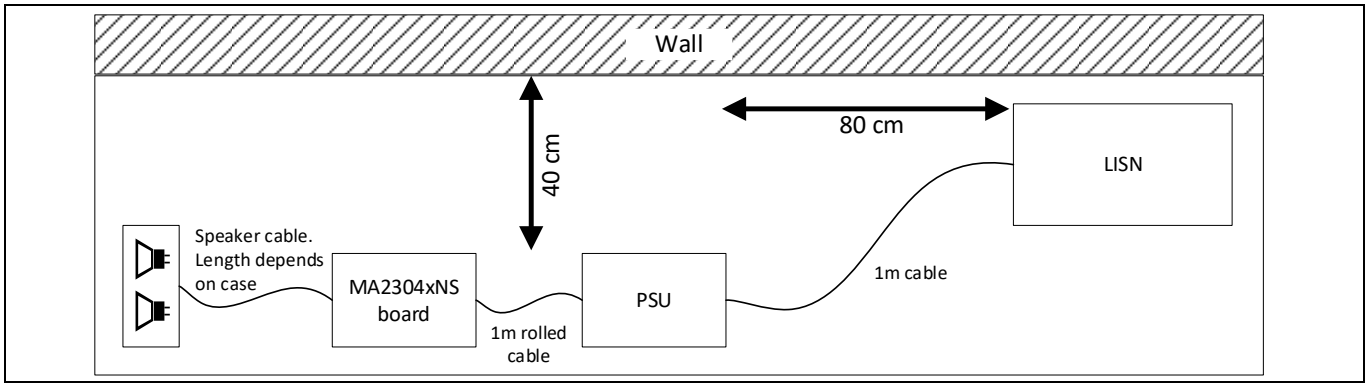

Figure 21 Conducted measurement setup according to CISPR 32 standard

5.2 Radiated emissions of ferrite filters on single amplifier 2*BTL

5.2.1 Ferrite comparison

Figure 22 shows a radiated emissions test comparing the effect of two different ferrite beads, NFZ2MSD301SZ10L and NFZ2MSD150SN10L. As expected, a higher impedance ferrite bead shows improved suppression. The limiting factor is the maximum DC current supported by the ferrite bead.

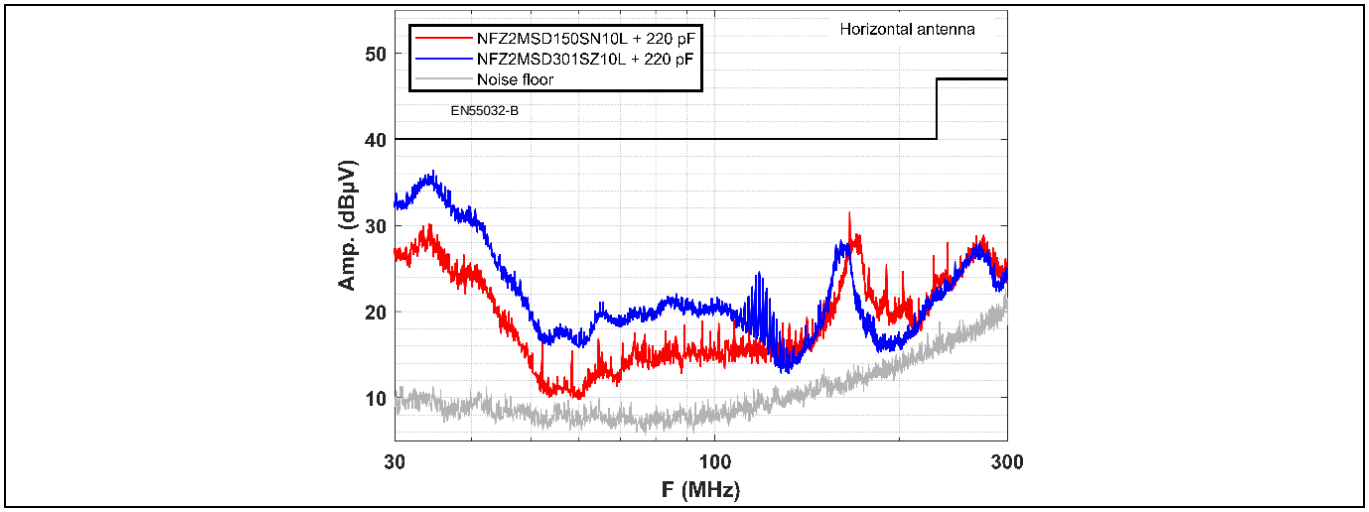

Figure 22 Radiated emissions test comparison between different ferrite filter parts. Conditions, PVDD : 18 V / Output power (continuous) : 2*10 W / Load : speaker 4 Ω / Setup : A / Cable orientation : 1 / Speaker cable length : 20 cm / Voltage: (dBµV) peak

5.2.2 Effect of cable lengths

Figure 23 shows the effect of different cable lengths and different capacitance used with a ferrite bead output filter. The cable length has a significant impact specially in the region from 30 MHz to 40 MHz. Extending the cable length up to 40 cm requires either a 470 pF or a 1 nF capacitor in the output filter.

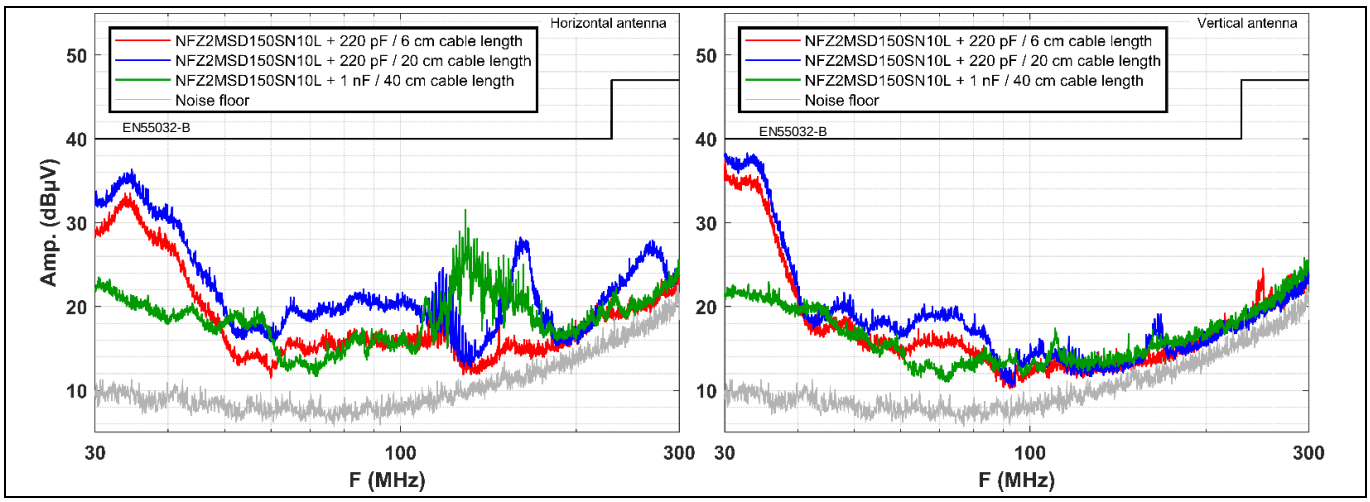

Figure 23 Radiated emissions test comparison between different speaker cable lengths. Conditions, Output filter : Ferrite NFZ2MSD150SN10L + 220 pF or 1 nF / PVDD : 18 V / Output power (continuous) : 2*10 W / Load : speaker 4 Ω / Setup : A / Cable orientation : 1 / Speaker cable length : 20 cm / Voltage: (dBµV) peak

5.2.3 Effect of shunt capacitor value

Figure 24 shows the effect of the capacitor value in the ferrite filter and the amount of suppression. The most affected region is observed from 30 MHz to 50 MHz. The choice of the capacitance value results in the trade off suppression and idle power consumption.

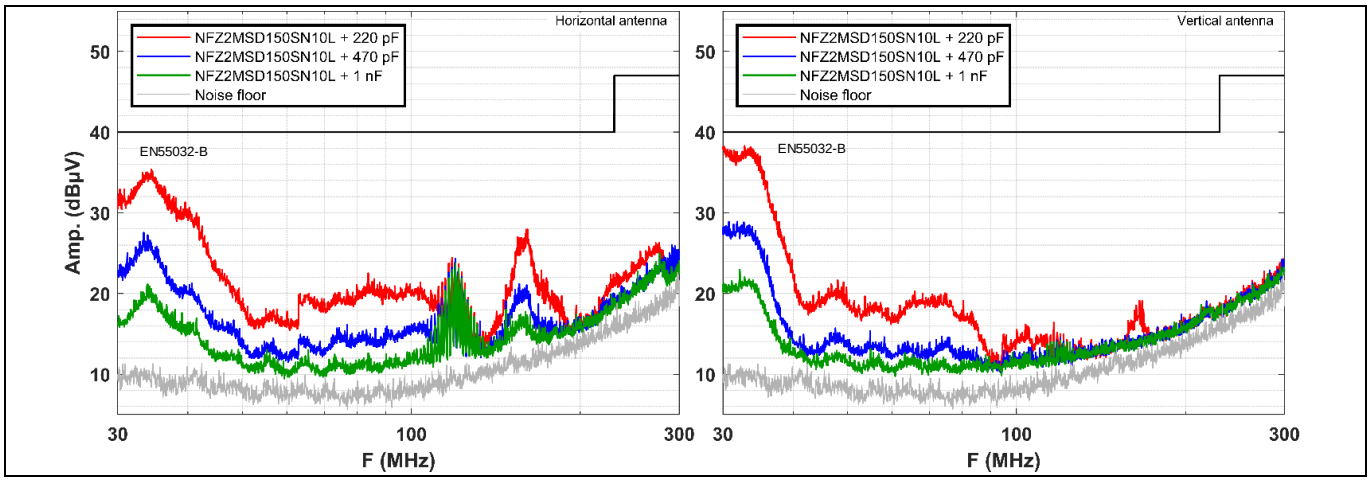

Figure 24 Radiated emissions test comparison between different capacitance values with the same ferrite bead NFZ2MSD150SN10L in the output filter. Conditions, PVDD : 18 V / Output power (continuous) : 2*10 W / Load : speaker 4 Ω / Setup : A / Cable orientation : 1 / Speaker cable length : 20 cm / Voltage: (dBµV) peak

5.2.4 Effect of RC damping network

Adding a small R+C damping network to the ferrite filter can also help with the amount of suppression in the 30 MHz to 50 MHz region in radiated emissions. Even though adding this R+C network has a small

penalty in idle power consumption, the penalty is not as big as in the case of increasing the 220 pF capacitor to 1 nF. Figure 25 shows the effect of this R+C damping network in radiated emissions.

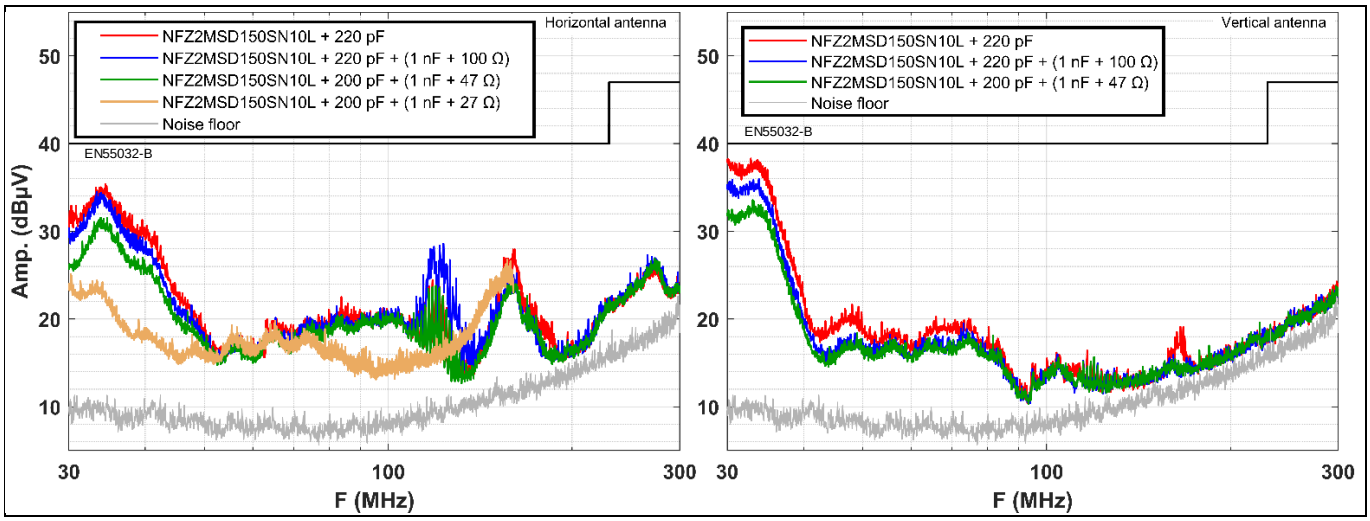

Figure 25 Radiated emissions test comparison between different R+C network with the same ferrite bead NFZ2MSD150SN10L in the output filter. Conditions, PVDD: 18 V / Output power (continuous): 2*10 W / Load: speaker 4 Ω / Setup: A / Cable orientation: 1 / Speaker cable length: 20 cm / Voltage: (dBµV) peak

5.2.5 Effect of PVDD variation

Figure 26 shows the difference in radiated emissions for different output power levels. The lower the output power the lower the emissions. This can help as a reference when trying to estimate the amount of emissions for a certain output power.

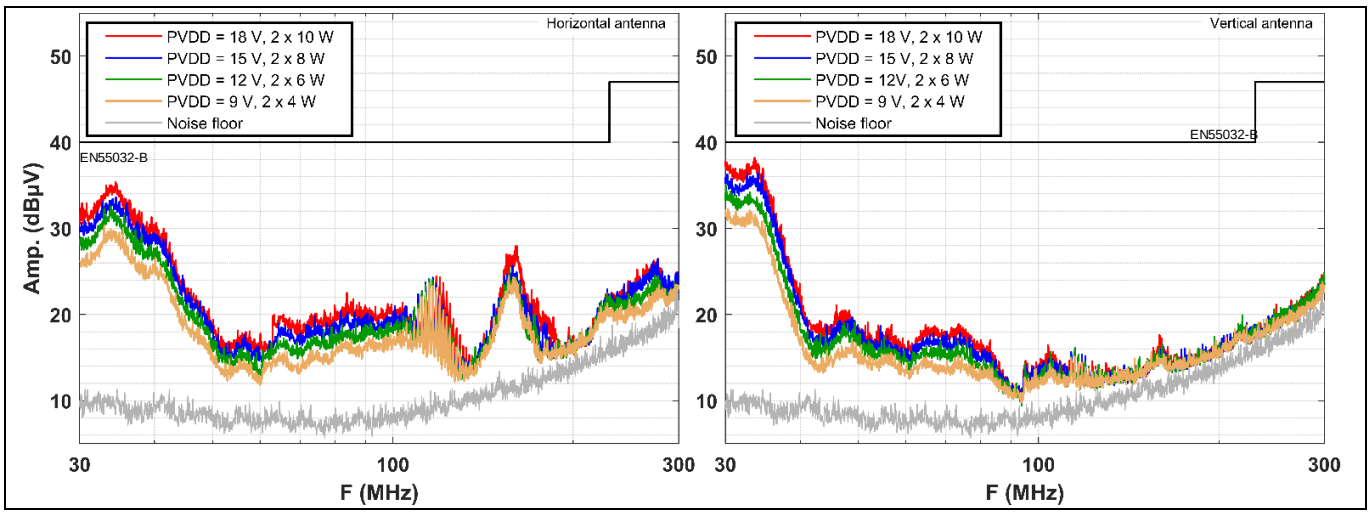

Figure 26 **Radiated emissions test comparison between different PVDD values and output power conditions. Conditions, Output filter: Ferrite NFZ2MSD150SN10L + 220 pF / PVDD: 18 V / Output power (continuous): 2*10 W / Load: speaker 4 Ω / Setup: A / Cable orientation: 1 / Speaker cable length: 20 cm / Voltage: (dBµV) peak**

5.2.6 Effect of MA2304xx drive strength control

MA2304xNS features drive strength control to further improve emissions. Figure 27 shows a radiated emissions measurements example that compares the results from the lowest to the highest drive strength.

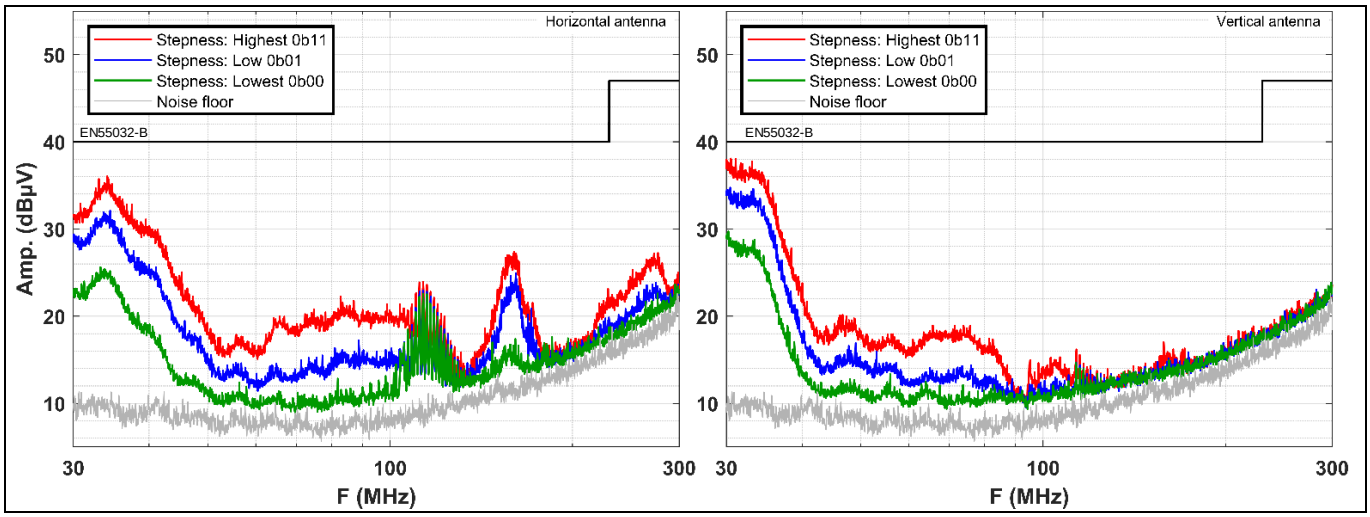

Figure 27 **Radiated emissions test comparison between different drive strength control settings. Conditions, Output filter: Ferrite NFZ2MSD150SN10L + 220 pF / PVDD: 18 V / Output power (continuous): 2*10 W / Load: speaker 4 Ω / Setup: A / Cable orientation: 1 / Speaker cable length: 20 cm / Voltage: (dBµV) peak**

5.2.7 Cable reflections

Depending on the cable length and amount of capacitance of the output filter, the combination of the filter, cables, and loudspeaker load can behave as a transmission line at a certain frequency range. This

is shown in Figure 28 with a horizontal antenna measurement with a ferrite bead filter and measured in setup A with cable orientation 2. A resonance at 180 MHz is observed. This is also particularly noticeable at specific cable and antenna orientations. Although the resonance due the transmission line effect is well below the margin, there are two approaches to eliminate the resonance if this is still problematic for a certain application.

- Add another ferrite in series with the loudspeaker load. The effect of this approach is shown in the blue color case in Figure 28.
- Simply add a second ferrite bead output filter after the main one. In this case the impedance and capacitance are significantly lower as they only need to add suppression at the resonance frequency.

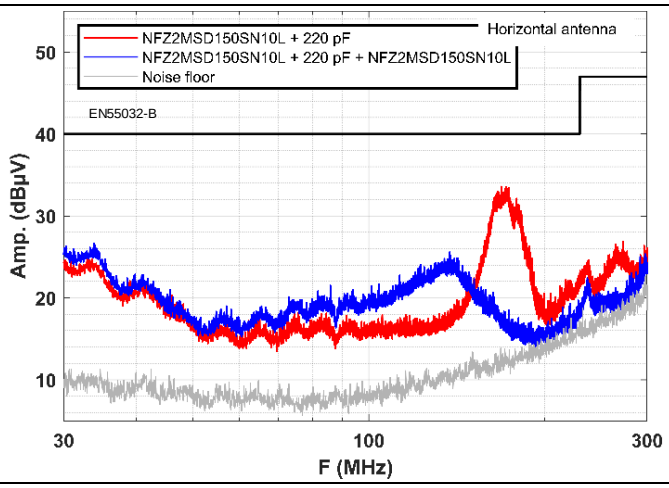

Figure 28 Radiated emissions test comparison that shows the effect of a third ferrite in series to suppress cable reflections. Conditions, Output filter: Ferrite NFZ2MSD150SN10L + 220 pF / PVDD: 18 V / Output power (continuous): 2*10 W / Load: speaker 4 Ω / Setup: A / Cable orientation: 2 / Speaker cable length: 20 cm / Voltage: (dBµV) peak

5.2.8 40 cm cable length measurements at different angles

The following figures (Figure 29, Figure 30, Figure 31, and Figure 32) show radiated emissions results with 40 cm loudspeaker cable lengths and a ferrite filter at the output. In this case the measurement setup is B and cable orientation is 2 according to Figure 20 and Figure 21. The capacitor value of 470 pF provides enough suppression to pass with a significant margin at any cable orientations when 220 pF is not enough.

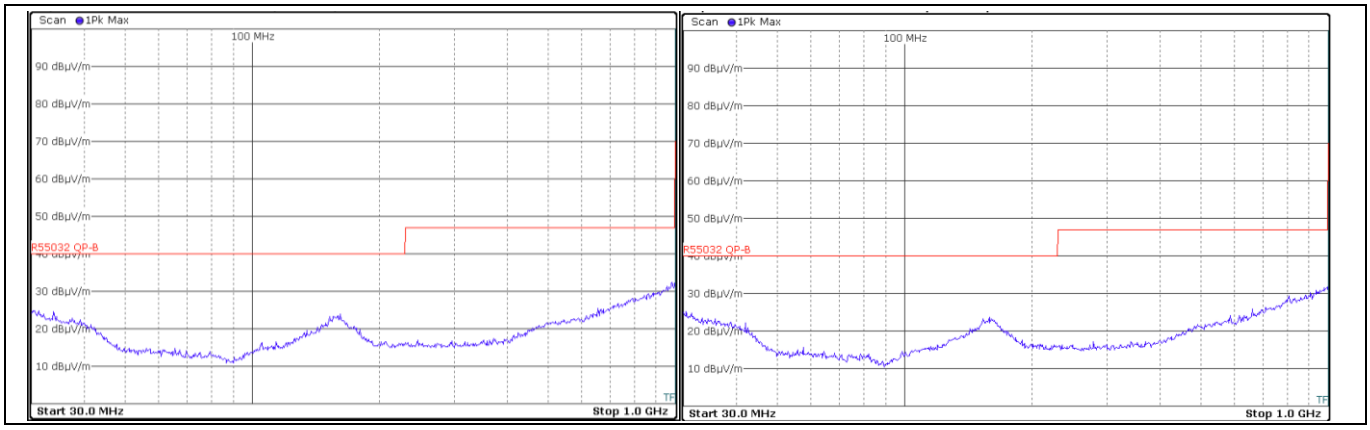

Figure 29 **Radiated emissions test. Conditions, Output filter : Ferrite NFZ2MSD150SN10L + 470 pF / PVDD : 18 V / Output power (continuous) : 2*10 W / Load : speaker 4 Ω / Setup : B / Cable orientation : 2 / Speaker cable length : 40 cm / Table rotation: 0° left, 90° right / Horizontal antenna.**

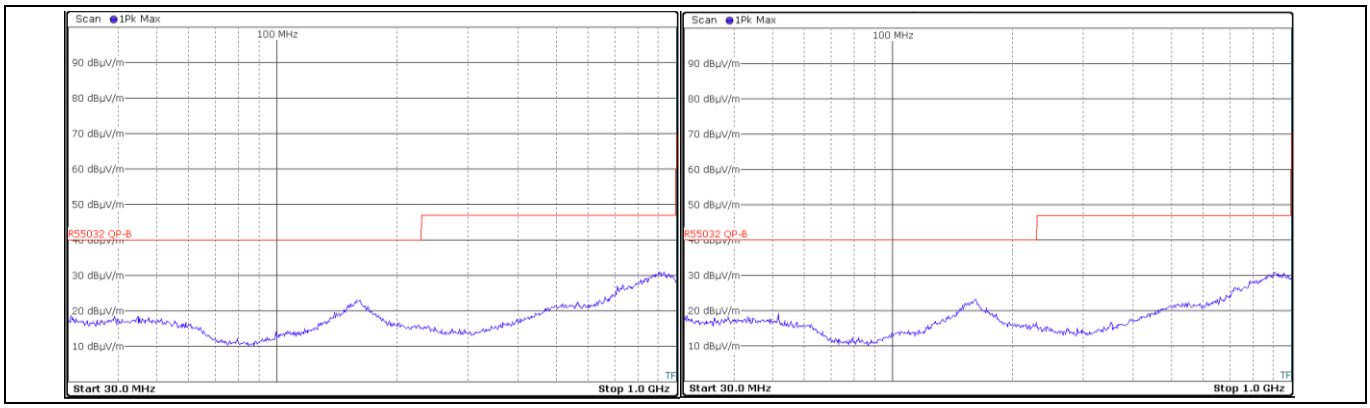

Figure 30 **Radiated emissions test. Conditions, Output filter: Ferrite NFZ2MSD150SN10L + 470 pF / PVDD: 18 V / Output power (continuous): 2*10 W / Load: speaker 4 Ω / Setup: B / Cable orientation: 2 / Speaker cable length: 40 cm / Table rotation: 0° left, 90° right / Vertical antenna.**

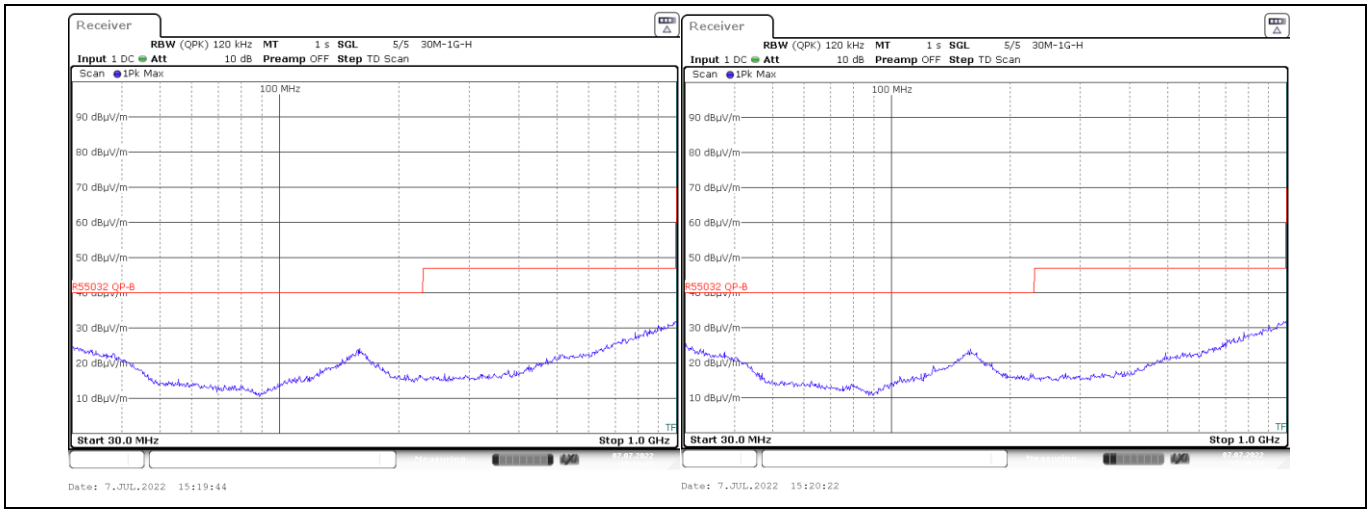

Figure 31 Radiated emissions test. Conditions, Output filter: Ferrite NFZ2MSD150SN10L + 470 pF / PVDD: 18 V / Output power (continuous): 2*10 W / Load: speaker 4 Ω / Setup: B / Cable orientation: 1 / Speaker cable length: 40 cm / Table rotation: 0° left, 90° right / Horizontal antenna.

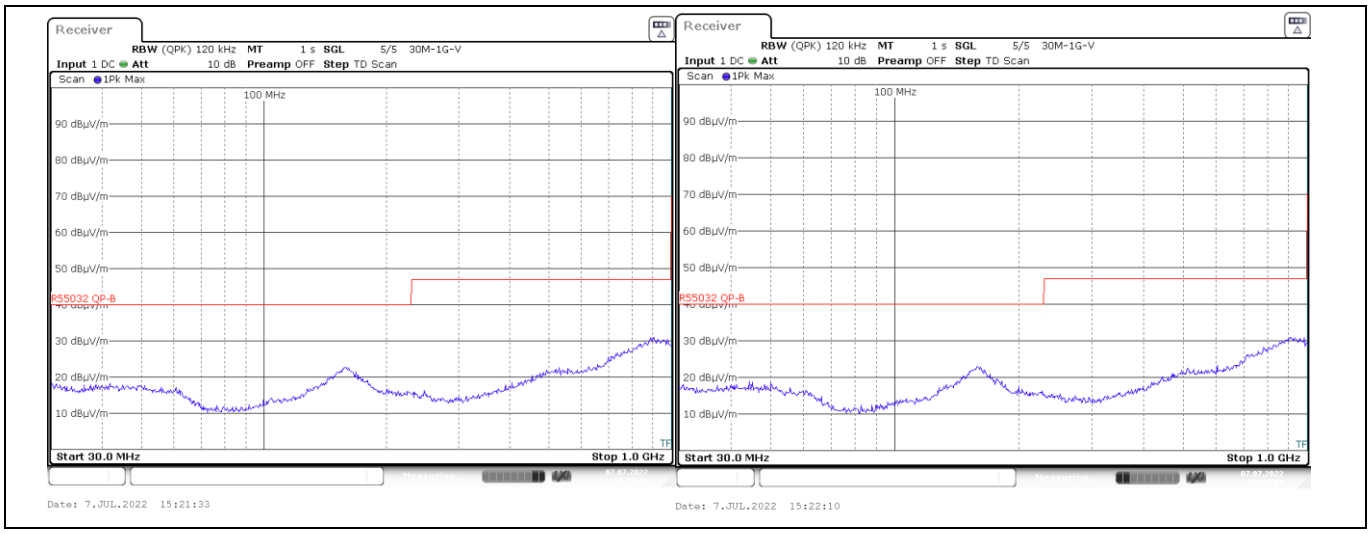

Figure 32 Radiated emissions test. Conditions, Output filter: Ferrite NFZ2MSD150SN10L + 470 pF / PVDD: 18 V / Output power (continuous): 2*10 W / Load: speaker 4 Ω / Setup: B / Cable orientation: 1 / Speaker cable length: 40 cm / Table rotation: 0° left, 90° right / Vertical antenna.

5.2.9 2*25 W high continuous output power with ferrites beads

Figure 33 shows an example of radiated emissions results while playing at higher continuous output than typical levels. In this case the output power is 2*25 W at 4 Ω loudspeaker load. The graph also shows the difference between a 60 cm and 20 cm loudspeaker cable for reference. This demonstrates that, to pass radiated emissions a ferrite filter is enough even at higher power levels close to clipping.

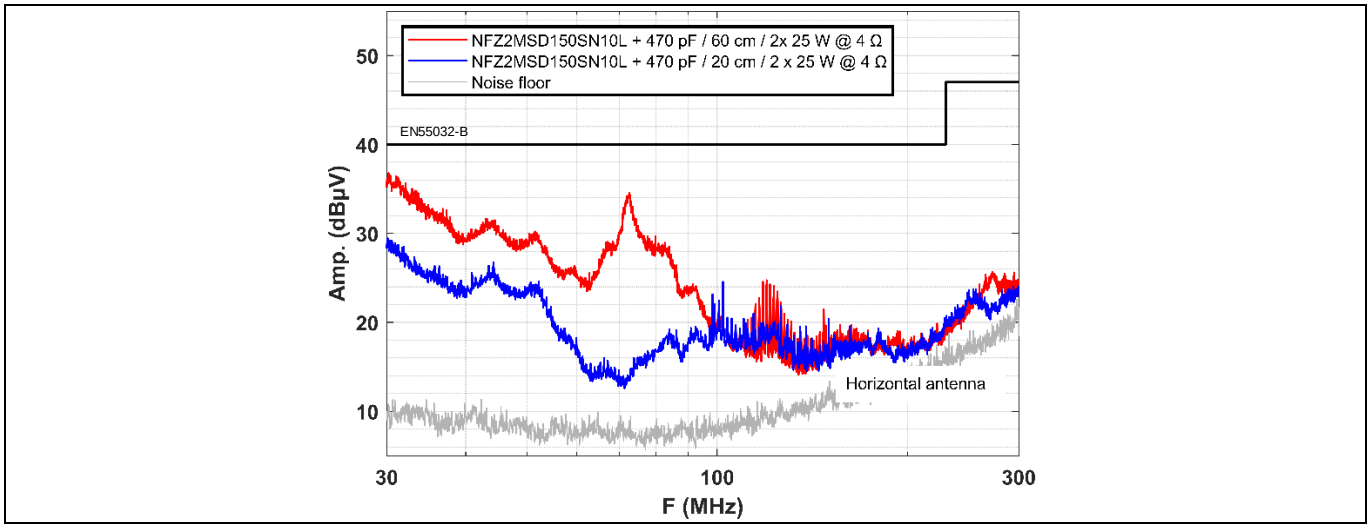

Figure 33 Radiated emissions test comparison for two different cable lengths at high continuous output power. Conditions, Output filter: Ferrite NFZ2MSD150SN10L + 220 pF / PVDD : 18 V / Output power (continuous): 2*25 W / Load: speaker 4 Ω / Setup: A / Cable orientation : 1 / Speaker cable length: 20 cm and 60 cm / Voltage: (dBµV) peak

5.2.10 LC filter configurations with 60 cm speaker cable length

Figure 34 compares radiated emissions tests with speaker using 60 cm cable length with different LC filter configurations. In these test conditions, multilevel does not need any higher inductance or capacitance than 3.3 µH + 470 pF, as with this configuration radiated emissions are significantly close to the noise floor of the testing equipment which represents a margin of 30 dB.

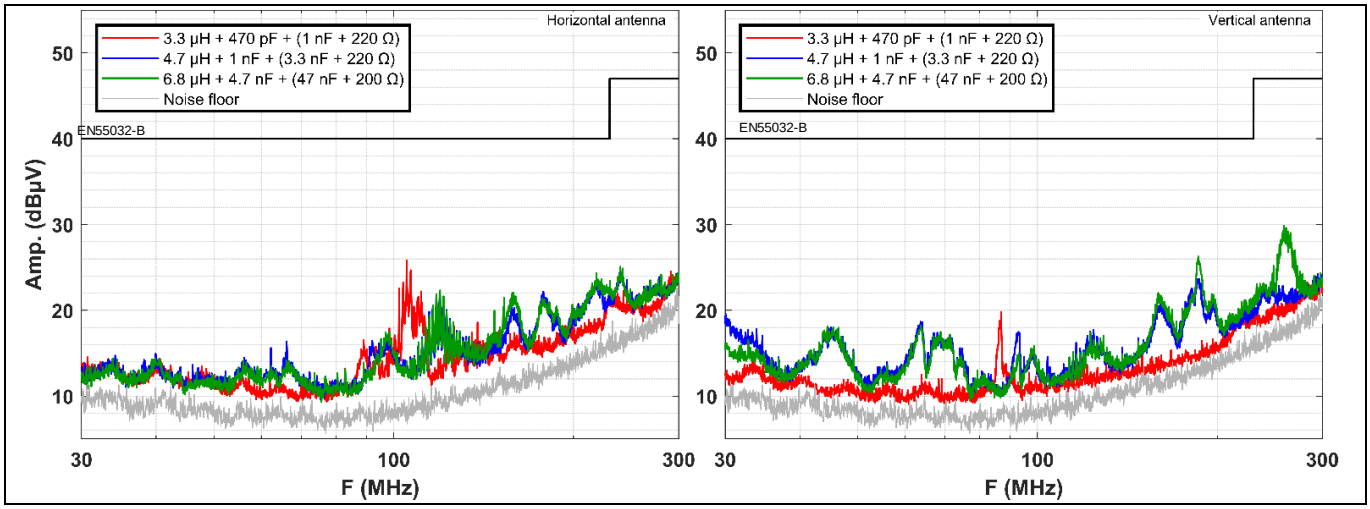

Figure 34 Radiated emissions test comparison for different LC filter configurations. Conditions, Output filter: LC filter / PVDD: 18 V / Output power (continuous): 2*10 W / Load: speaker 4 Ω / Setup: A / Cable orientation: 1 / Speaker cable length: 60 cm / Voltage: (dBµV) peak

5.3 Conducted emissions

Conducted emissions test results are generally influenced by the power supply design. However, the influence of the Class-D emissions into conducted test results is not negligible. If the power supply is

carefully designed for a specific target class-D amplifier application, it is possible to operate the Class-D amplifiers of the system only with ferrite filters. In the following sections, different test cases are evaluated with different combinations of power supplies and output filters to demonstrate how this combination affects conducted emissions results.

5.3.1 Ferrite filters - Effect of cable length

Figure 35 shows a comparison of a conducted emissions test with a GSM60A18-P1J power supply and a ferrite bead output filter + a 1 nF capacitor. The difference between the two cases lies in the speaker cable length, 20 cm and 40 cm. In both cases the test results are successful, however the speaker cable length affects the frequency region above 5 MHz. This is because typically, this region is also affected by radiated emissions coupling back to the power supply cables that connects to the amplifier as common-mode noise. The longer the cable length the higher the effect in this frequency region.

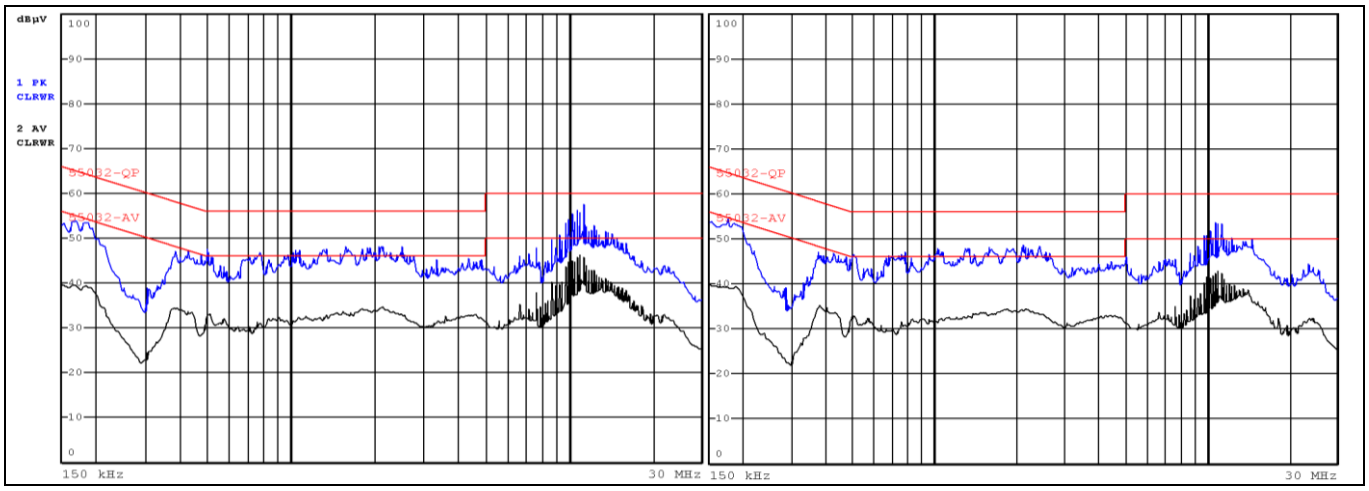

Figure 35 Conducted emissions test comparison with ferrite filter and different cable lengths. Conditions, Output filter: NFZ2MSD150SN10L + 1 nF / PVDD: 18 V / Output power (continuous): 2*10 W / Load: speaker 4 Ω / Speaker cable length: 40 cm and 20 cm / Voltage: (dBµV) peak / Power supply: Meanwell GSM60A18-P1J

5.3.2 LC filter configurations

This test is similar to Ferrite filters - Effect of cable length, except that the amplifier is using an LC filter. The only significant difference is in the frequency region above 5 MHz and this is because radiated emissions are reduced significantly this region. This test is also using an GSM60A18-P1J power supply.

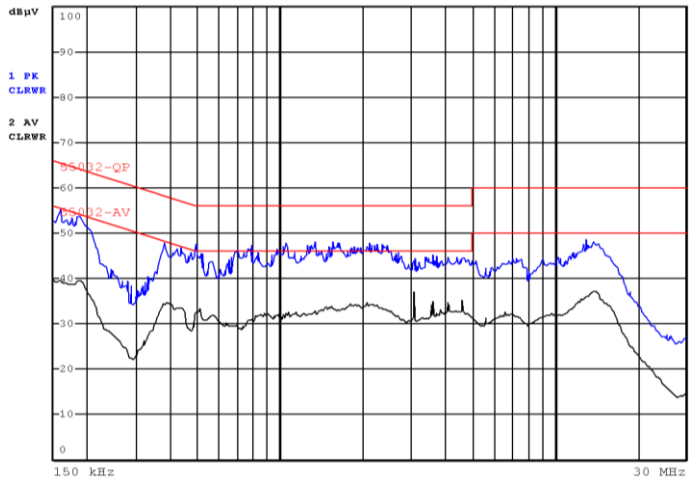

Figure 36 Conducted emissions test comparison for different LC filter configurations. Conditions, Output filter: Output filter: 4.7 µH + 1 nF + (10 nF+100 Ω) / PVDD: 18 V / Output power (continuous): 2*10 W / Load: speaker 4 Ω / Speaker cable length: 60 cm / Voltage: (dBµV) peak / Power supply: Meanwell GSM60A18-P1J

In contrast to this test, the Figure 37 shows an example of conducted emissions using a different power supply such as the GSM60E18-P1J. In this case, the suppression of this power supply in the lower frequency region (below 1 MHz) is significantly lower than the previous results. This is why in this scenario an LC filter with a lower cut-off frequency is a better fit.

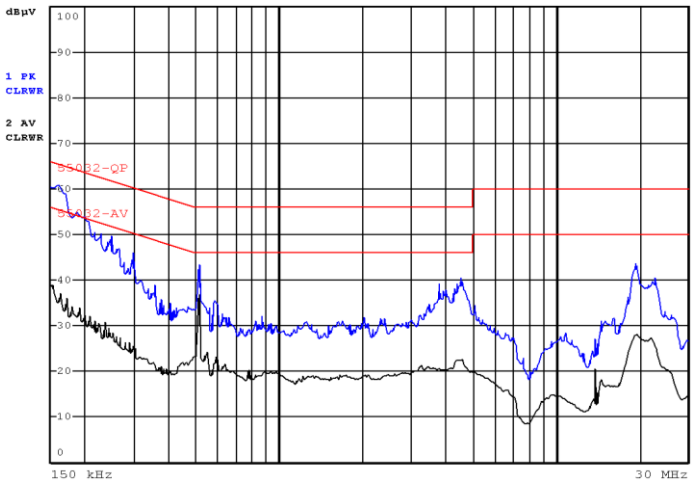

Figure 37 Conducted emissions test comparison for different LC filter configurations. Conditions, Output filter: 6.8 µH + 220 nF + (1 µF+10 Ω) / PVDD: 18 V / Output power (continuous): 2*10 W / Load: speaker 4 Ω / Speaker cable length: 60 cm / Voltage: (dBµV) peak / Power supply: Meanwell GSM60E18-P1J

5.3.3 Ferrite filters - Effect of radiated emissions in conducted and the effect of a common-mode choke

Figure 38 is also an example of how radiated emissions affects conducted emissions as common-mode noise. A GSM60A18-P1J power supply was used here as well. The red curve shows the results with a ferrite output filter and a 220 nF capacitor at the Class-D output. As the cut-off frequency is significantly higher than the cases above with a 1 nF capacitor, the blue curve shows the effect of introducing a 50 µH common-mode choke. Logically, it filters out all the common-mode radiation into the power line

(PVDD) cables. If possible, it is always better to introduce this common-mode choke as part of the power supply, even though it can also be in the Class-D amplifier side. This way, the Class-D idle power consumption and light-load efficiency can be maximized while passing conducted emissions tests.

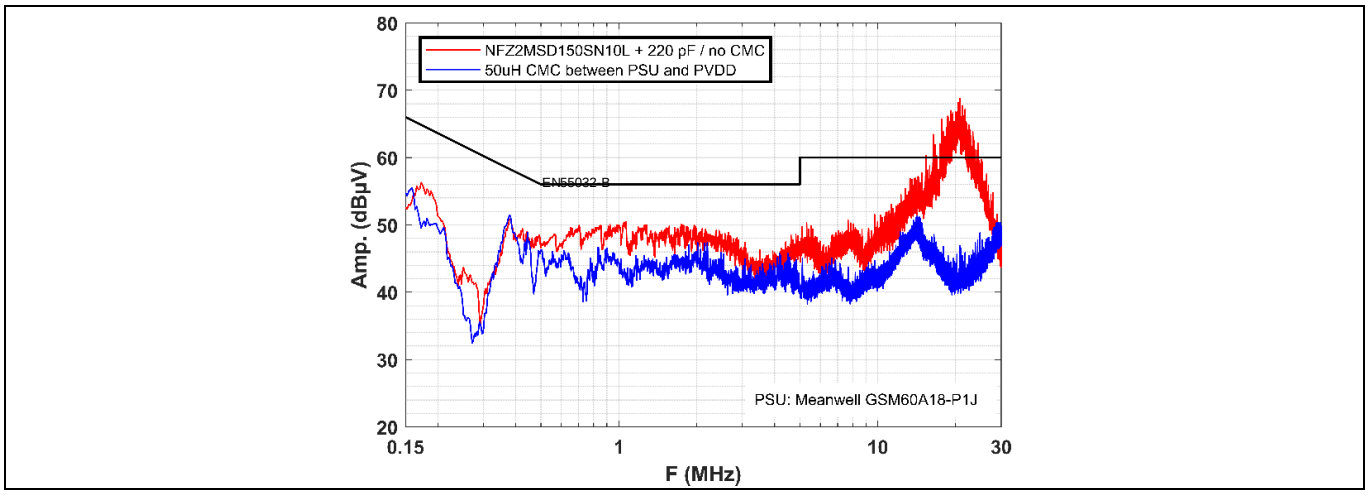

Figure 38 Conducted emissions test comparison with and without 50 µH common-mode choke between power supply and amplifier. Conditions, Output filter: NFZ2MSD150SN10L + 220 pF / PVDD: 18 V / Output power (continuous): 2*10 W / Load: speaker 4 Ω / Speaker cable length: 20 cm / Voltage: (dBµV) peak / Power supply: Meanwell GSM60A18-P1J

5.3.4 Ferrite filters - Effect of a third shield cable to ground in a twisted pair

Another technique that helps reducing the common-mode emissions in conducted tests is to use a third cable at the output nodes of the Class-D amplifier terminals (A and B) connected to ground and the speaker chassis or body. If the three cables are twisted together then the third cable connected to ground acts as a natural shield. This effect is illustrated in Figure 39 with and without the third cable connected to ground.

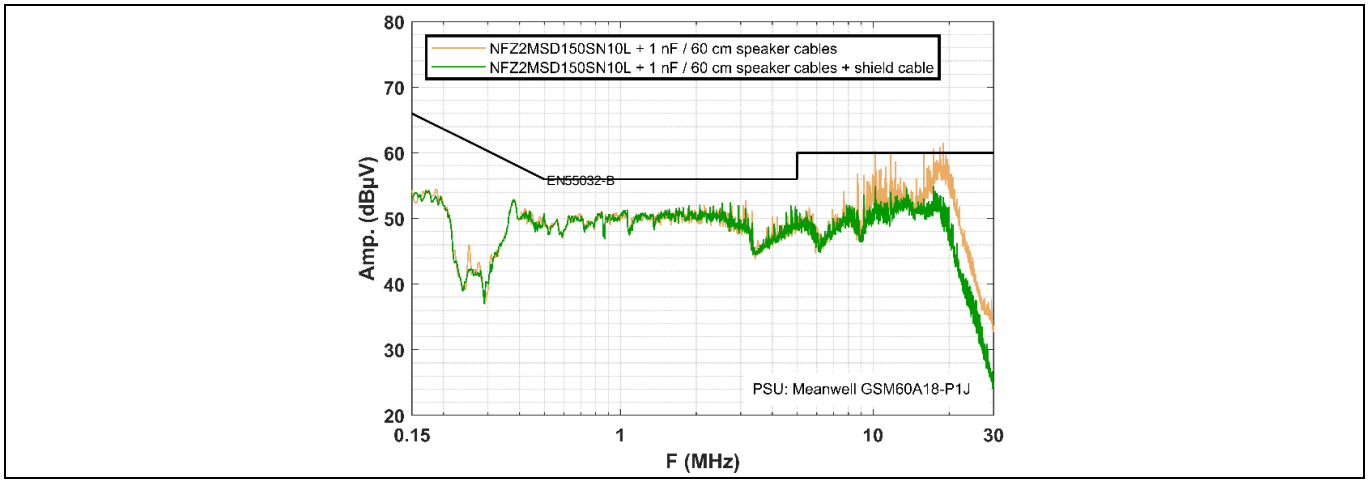

Figure 39 Conducted emissions test comparison, effect of third cable connected to ground and speaker chassis (twisted cables). Conditions, Output filter: NFZ2MSD150SN10L + 1 nF / PVDD: 18 V / Output power (continuous): 2*10 W / Load: speaker 4 Ω /

Speaker cable length: 60 cm / Voltage: (dBµV) peak / Power supply: Meanwell GSM60A18-P1J

5.3.5 PWM-sync feature effect with multiple devices

MA2304xNS features the PWM-sync functionality in order to improve conducted emissions in multichannel applications that use more than one device. Figure 40 shows an example of the effect of synchronizing the PWM signals of two MA2304xNS devices with 0° and 180° phase alignment. Note that this measurement ignores the emissions from the power supply and analyses only the emission from the amplifier as a relative level to show the effect.

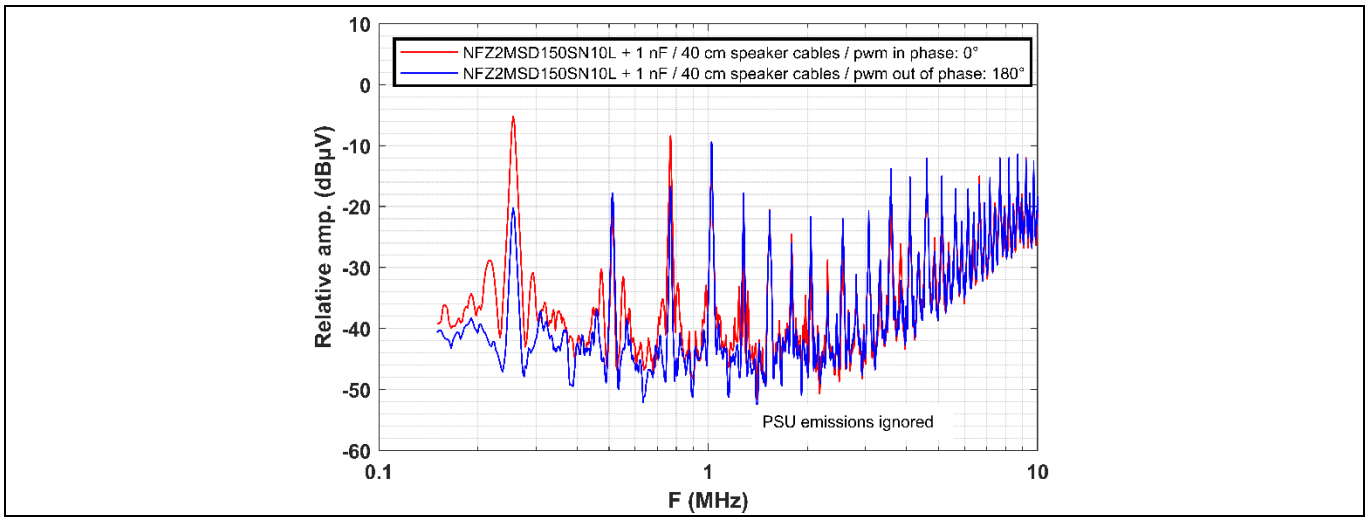

Figure 40 Conducted emissions test comparison, effect of PWM-sync functionality. Conditions, Output filter: NFZ2MSD150SN10L + 1 nF / PVDD: 18 V / Output power (continuous): 2*10 W / Load: speaker 4 Ω / Speaker cable length: 40 cm / Voltage: (dBµV) peak.

References

[1] Electromagnetic Compatibility (EMC)Design and Test Case Analysis, Junqi Zheng, 2019, John Wiley & Sons, Ltd.

[2] Electromagnetic Compatibility Engineering, Henry W. Ott, 2009, John Wiley & Sons, Ltd.

[3] Federal Communications Commission, Part 15, Title 47.

[4] International Electrotechnical Commission, CISPR 32:2015/AMD1:2019, Amendment 1 - Electromagnetic compatibility of multimedia equipment - Emission requirements

[5] White paper, MERUS™ multilevel class-D audio amplifier supports ultra-compact and low-power applications, Technology, and design benefits. By Rien Oortgiesen and Jens Tybo Jensen.

[6] Electromagnetic Compatibility Engineering, Henry W. Ott, 2009, John Wiley & Sons, Ltd.

[7] Signals & Systems, Alan V. Oppenheim, Alan S. Willsky, ,1997, Prentice-Hall, Inc.

[8] Analog Electronic Filters Theory, Design and Synthesis, Hercules G. Dimopoulos, 2012, Springer.

Revision history

Document revision	Date	Description of changes
**	2023-10-31	Initial release

Trademarks
All referenced product or service names and trademarks are the property of their respective owners.

Edition 2023-10-31
Published by

Infineon Technologies AG
81726 Munich, Germany

© 2023 Infineon Technologies AG. All Rights Reserved.

Do you have a question about this document?
Email: erratum@infineon.com

Document reference
AN_2308_PL88_2309_132312

Important notice
The information contained in this application note is given as a hint for the implementation of the product only and shall in no event be regarded as a description or warranty of a certain functionality, condition or quality of the product. Before implementation of the product, the recipient of this application note must verify any function and other technical information given herein in the real application. Infineon Technologies hereby disclaims any and all warranties and liabilities of any kind (including without limitation warranties of non-infringement of intellectual property rights of any third party) with respect to any and all information given in this application note.

The data contained in this document is exclusively intended for technically trained staff. It is the responsibility of customer's technical departments to evaluate the suitability of the product for the intended application and the completeness of the product information given in this document with respect to such application.

Warnings
Due to technical requirements products may contain dangerous substances. For information on the types in question please contact your nearest Infineon Technologies office.

Except as otherwise explicitly approved by Infineon Technologies in a written document signed by authorized representatives of Infineon Technologies, Infineon Technologies' products may not be used in any applications where a failure of the product or any consequences of the use thereof can reasonably be expected to result in personal injury.