Latest Infineon PQFN 8x6 package for power MOSFETs

About this document

Scope and purpose

This application note is intended as an introduction to Infineon's new PQFN 8x6 package for power MOSFETs. The main advantages of this new package include high-power density for high-current applications as well as industry best $R_{DS(ON)}$ and figure-of-merit (FOM) in a discrete package leading to lower conduction losses. Additionally, this new package fills the gap between SuperSO8 5x6 and TOLL packages in Infineon's power MOSFET product portfolio. This PQFN 8x6 package footprint is compatible with SuperSO8 5x6 package footprint leading to easy replacement of 2x SuperSO8 5x6 in parallel with 1x PQFN 8x6 eliminating dynamic current sharing concerns during paralleling of MOSFETs for high-current applications.

Intended audience

This document is intended for designers and manufacturers of battery-powered power tools and engineers who are familiar with three-phase motor drive systems and motor control.

Table of contents

About this document **1**
Table of contents **2**
1 Introduction **3**
1.1 PQFN 8x6 package 3
1.2 Target applications 4
1.3 Package design 4
1.4 Layout optimization 5
1.5 Comparison of best-in-class (BiC) devices 6
2 Experimental results **8**
2.1 High-current DC and pulse test 8
2.2 Three-phase motor-drive application 10
3 Summary **12**
References **13**
Revision history **14**
Disclaimer **15**

1 Introduction

1.1 PQFN 8x6 package

Market trends towards higher efficiency, higher power density, and higher system reliability are the key factors driving Infineon to constantly develop and introduce new packages every few years to enhance system performance. Infineon's extensive experience in MOSFET technologies in addition to the knowledge gained from customer feedback are the reasons for the development of new package concepts [1]. The new PQFN 8x6 package power MOSFET offers devices with extremely low on-state resistance ($R_{DS(ON)}$), yielding the industry's best FOM. Thus, these devices are optimized for high-frequency SMPS and high-power motor-drive applications.

Infineon is constantly expanding its package portfolio to address a wide range of applications which alongside traditional MOSFET packages such as TO-220, DPAK, and D^2PAK also includes leadless packages, ranging in size and capability from the smallest PQFN 3.3x3.3, to the mid-range SuperSO8 5x6, and the highest-performing such as TOLL and TOLT [2]. Thus, the introduction of PQFN 8x6 package allows to fill the gap between mid-range (SuperSO8 5x6) and highest-performing (TOLL/TO) packages leading to a wider portfolio for all power ranges.

The following figure shows that 8x8 MOSFET packages dominate for 40 V and 60 V MOSFETs with 50–70 mm^2 package size.

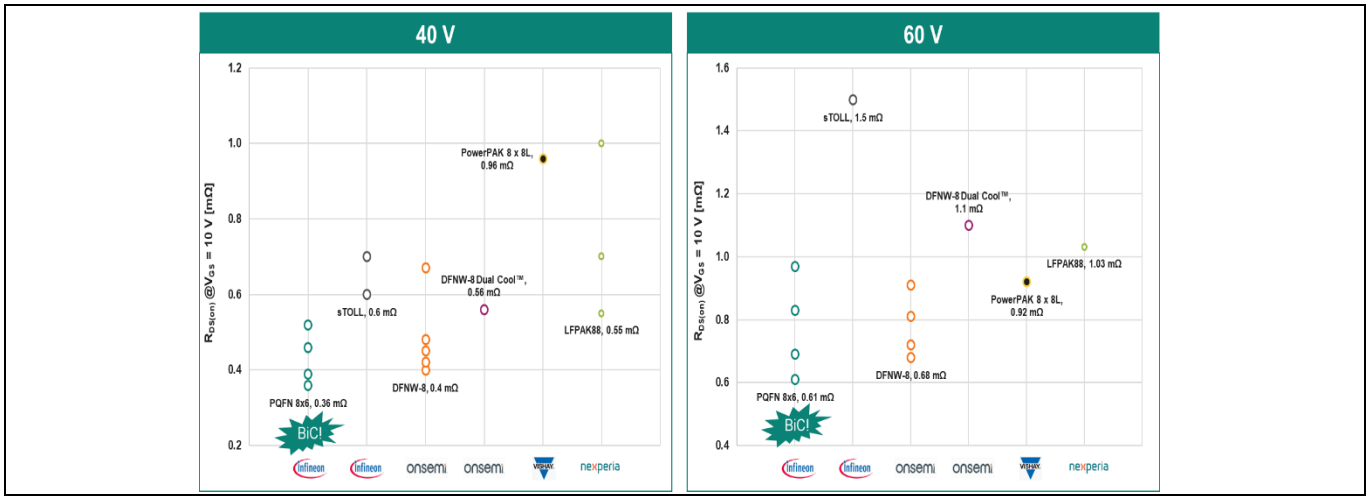

Figure 1 50–70 mm^2 package size competitive landscape

Some of the key benefits of this new technology are:

1. High efficiency
   - Lower conduction losses – 60 percent and 44.4 percent lower $R_{DS(on)typ.}$ compared to OptiMOS™ 6 power MOSFET 40 V and OptiMOS™ 5 power MOSFET 60 V devices, respectively in SuperSO8 5x6 packages
2. Compatible with SuperSO8 5x6 footprint leading to easy replacement for 2x SuperSO8 5x6 with 1x PQFN 8x6 enabling reduction in the number of paralleled MOSFETs and reduction of bill of materials (BOM)
3. Comparing PQFN 8x6 vs. PQFN 8x8 packages – PQFN 8x6 package has 30 percent smaller footprint compared to competitors PQFN 8x8 package leading to higher-power density
4. PQFN 8x6 package power MOSFET has 40 percent higher drain current (I_D) rating when compared with SuperSO8 5x6 package power MOSFET due to larger package size

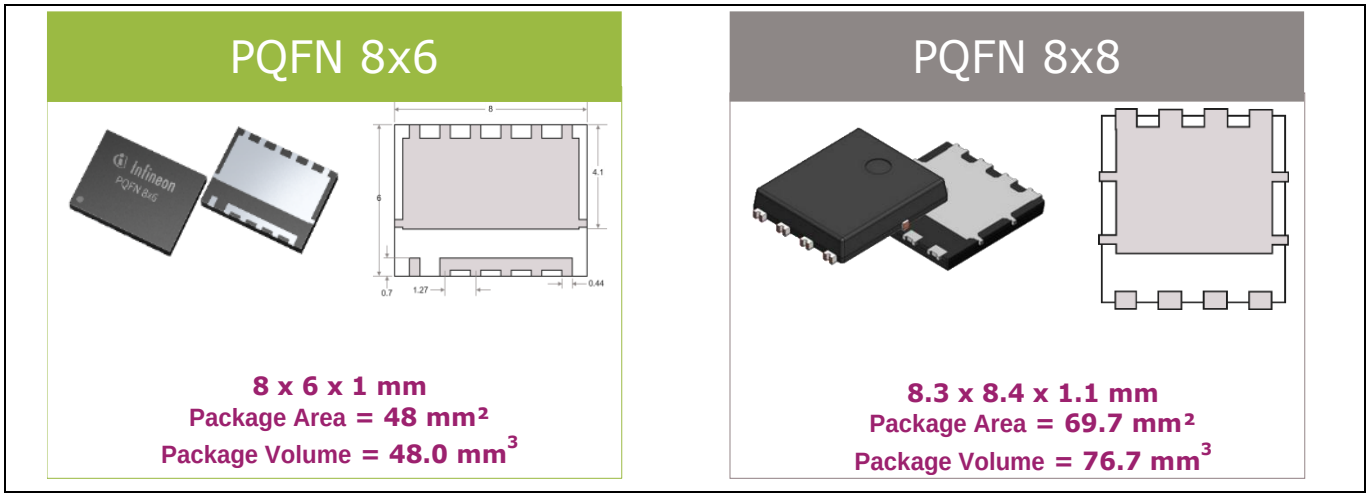

Figure 2 PQFN 8x6 vs. PQFN 8x8 package

1.2 Target applications

The new package is specifically designed for high-power applications. Since PQFN 8x6 are drain-down MOSFET packages, it is possible to add a heatsink on the bottom side of the PCB in order to address power hungry applications.

The main target applications of this new package are battery management systems, SMPS, energy storage applications and motor-drive applications such as power tools and gardening tools with continuous power levels up to 1.5 kW.



Figure 3 Target applications for the new PQFN 8x6 package power MOSFETs

1.3 Package design

The new PQFN 8x6 package is a clip-based package optimized to handle very high currents up to 650 A as shown in Figure 4. Moreover, this new package has fused source leads with symmetrically placed clip on the source post leading to larger contact area between clip and chip leading to improved thermal performance. Additionally, this new package can be produced with the same process flow as standard SuperSO8 5x6 package.

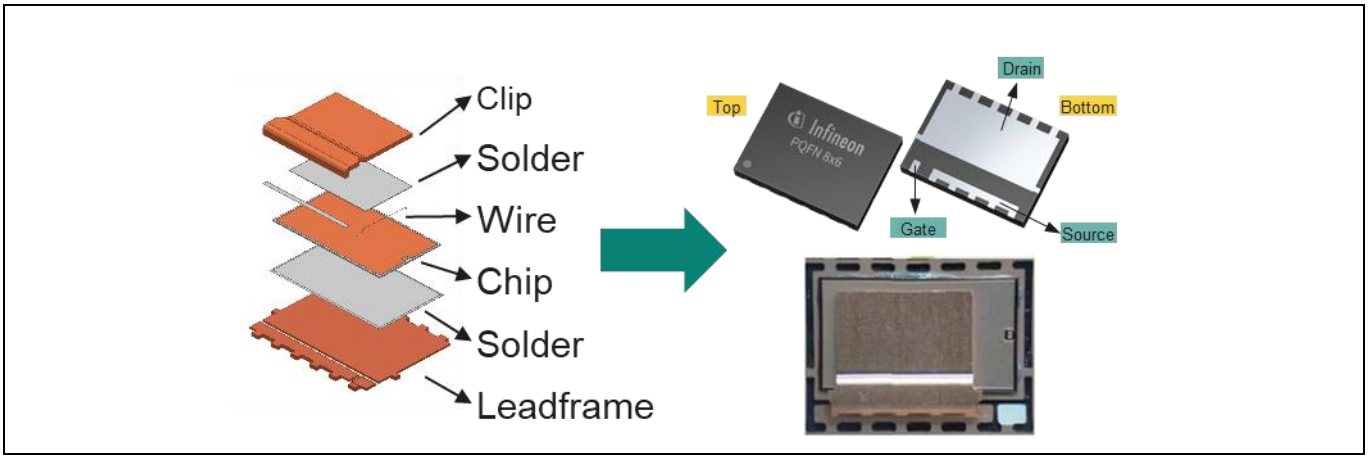

Figure 4 PQFN 8x6 package power MOSFETs

1.4 Layout optimization

In high-power applications, this new package has the following advantages:

- Increased power levels when compared to 1x SuperSO8 5x6 devices leading to higher power density
- 23 percent smaller PCB area for 1x PQFN 8x6 package versus 2x SuperSO8 5x6 devices in parallel

Additionally, paralleling of MOSFETs requires tight $V_{GS(th)}$ matching in order maximize current sharing between the MOSFETs. Moreover, dynamic current sharing problems worsen as the number of MOSFETs in parallel increases.

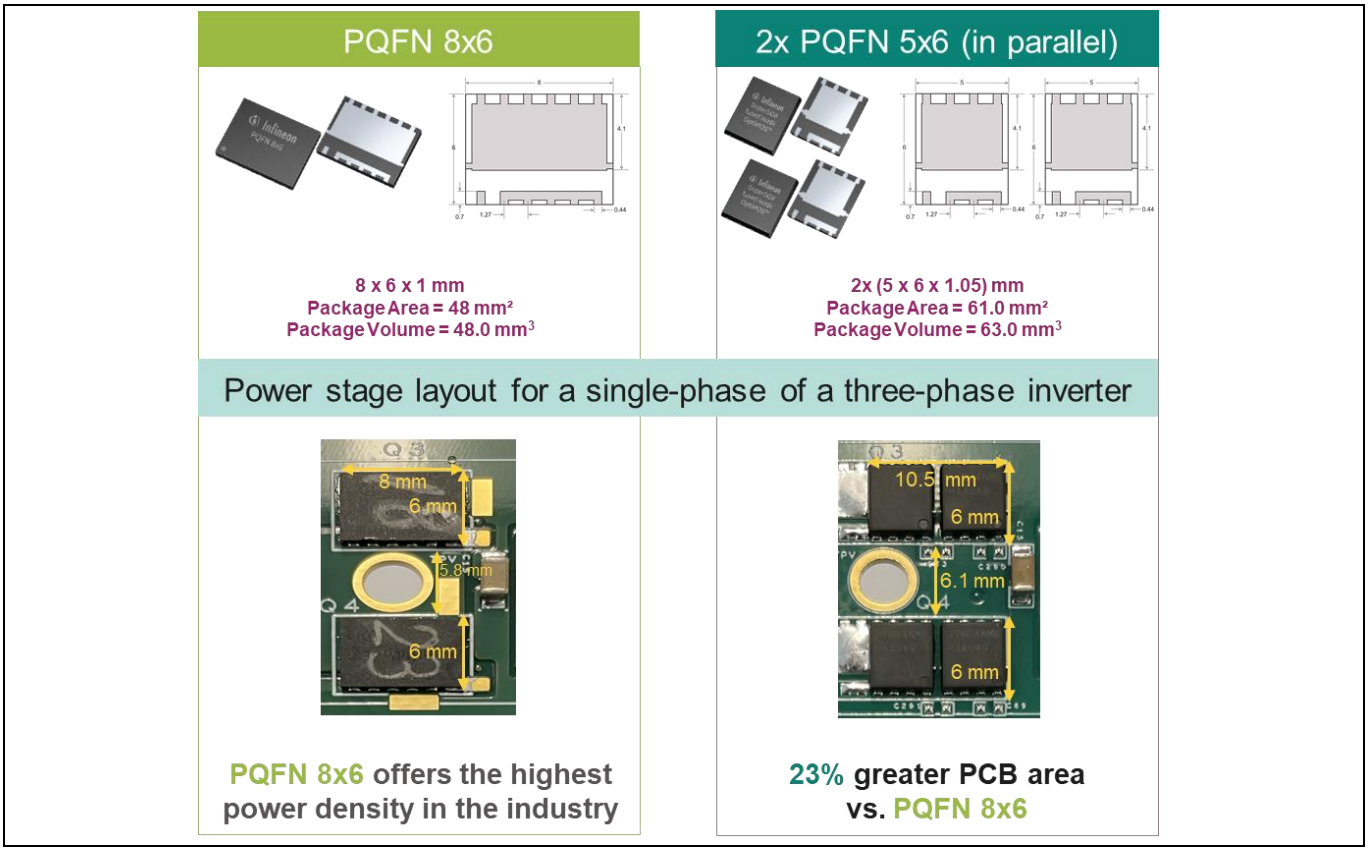

Figure 5 PQFN 8x6 package power MOSFETs vs. SuperSO8 5x6 package power MOSFETs

1.5 Comparison of best-in-class (BiC) devices

In Table 1 and Table 2, a datasheet comparison is given for both BiC 40 V and 60 V power MOSFET devices in PQFN 8x6 and SuperSO8 5x6 packages, respectively. The table focuses on parameters that are most important for SMPS and motor-drive applications.

Table 1 Datasheet comparison between BiC OptiMOS™ 6 40 V power MOSFET technology in both PQFN 8x6 and SuperSO8 5x6 packages

Parameter	Symbol	Conditions	IQFH36N04NM6	ISC007N04NM6	Unit
Technology	–	–	OptiMOS™ 6	OptiMOS™ 6	–
Package	–	–	PQFN 8x6	SuperSO8 5x6	–
Maximum on-state resistance	$R_{DS(on)}$	V_{GS} = 10 V, I_D = 100 A* / 50 A**	0.36*	0.7**	mΩ
Maximum operating temperature	T_j	–	175	175	°C
Maximum current rating	I_D	–	656	381	A
Maximum thermal resistance, junction – case	R_{thJC}	–	0.5	0.8	°C/W
Gate threshold voltage	$V_{GS(th)}$ (min.)	V_{DS} = V_{GS}, I_D = 1050 µA	1.8	1.8	V
	$V_{GS(th)}$ (typ.)		2.3	2.3	V
	$V_{GS(th)}$ (max.)		2.8	2.8	V
Typical gate charges	Q_g	V_{DD} = 20 V, I_D = 100 A* / 50 A**, V_{GS} = 0 to 10 V	206*	117**	nC
	Q_{gd}		28*	13**	nC
	Q_{gs}		48*	22**	nC
Typical input capacitance	C_{ISS}	V_{GS} = 0 V, V_{DS} = 20 V, f = 1 MHz	14300	6500	pF
Typical output capacitance	C_{OSS}	V_{GS} = 0 V, V_{DS} = 20 V, f = 1 MHz	4630	2100	pF
Typical reverse transfer capacitance	C_{RSS}	V_{GS} = 0 V, V_{DS} = 20 V, f = 1 MHz	105	40	pF
Typical reverse recovery time	t_{rr}	V_R = 20 V, I_F = 100A*/ 50A**, di_F / dt = 500 A/µs* / 1000 A/µs**	57*	26.7**	ns

Introduction

Table 2 Datasheet comparison between BiC OptiMOS™ 5 60 V power MOSFET technology in both PQFN 8x6 and SuperSO8 5x6 packages

Parameter	Symbol	Conditions	IQFH61N06NM5	BSC012N06NS	Unit
Technology	–	–	OptiMOS™ 5	OptiMOS™ 5	–
Package	–	–	PQFN 8x6	SuperSO8 5x6	–
Maximum on-state resistance	$R_{DS(on)}$	V_{GS} = 10 V, I_D = 100 A* / 50 A**	0.61*	1.2**	mΩ
Maximum operating temperature	T_j	–	175	175	°C
Maximum current rating	I_D	–	510	306	A
Maximum thermal resistance, junction – case	R_{thJC}	–	0.5	0.7	°C/W
Gate threshold voltage	$V_{GS(th)}$ (min.)	V_{DS} = V_{GS}, I_D = 247 µA* / 147 µA**	2.1	2.1	V
	$V_{GS(th)}$ (typ.)		2.8	2.8	V
	$V_{GS(th)}$ (max.)		3.3	3.3	V
Typical gate charges	Q_g	V_{DD} = 30 V, I_D = 100 A* / 50 A**, V_{GS} = 0 to 10 V	190*	115**	nC
	Q_{gd}		34*	21**	nC
	Q_{gs}		59*	35**	nC
Typical input capacitance	C_{ISS}	V_{GS} = 0 V, V_{DS} = 30 V, f = 1 MHz	13900	8300	pF
Typical output capacitance	C_{OSS}	V_{GS} = 0 V, V_{DS} = 30 V, f = 1 MHz	3020	1800	pF
Typical reverse transfer capacitance	C_{RSS}	V_{GS} = 0 V, V_{DS} = 30 V, f = 1 MHz	112	71	pF
Typical reverse recovery time	t_{rr}	V_R = 30 V, I_F = 100A*/ 50A**, di_F / dt = 500 A/µs* / 100 A/µs**	59*	41**	ns

2 Experimental results

2.1 High-current DC and pulse test

In order to evaluate the current handling capability of the new PQFN 8x6 package, high-current DC and pulse test was performed on BiC 60 V PQFN 8x6 power MOSFET device. The objective of these tests was to mimic locked rotor scenario and stall condition when high-currents are passing through the MOSFETs. The following figure shows the test condition and the test setup used to perform these tests including the PCB used to perform these tests. Additionally, these tests were performed on a 6-layer board with 2 oz. copper on outer layer and 1 oz. copper on inner layer on a 3x3 in^2 board.

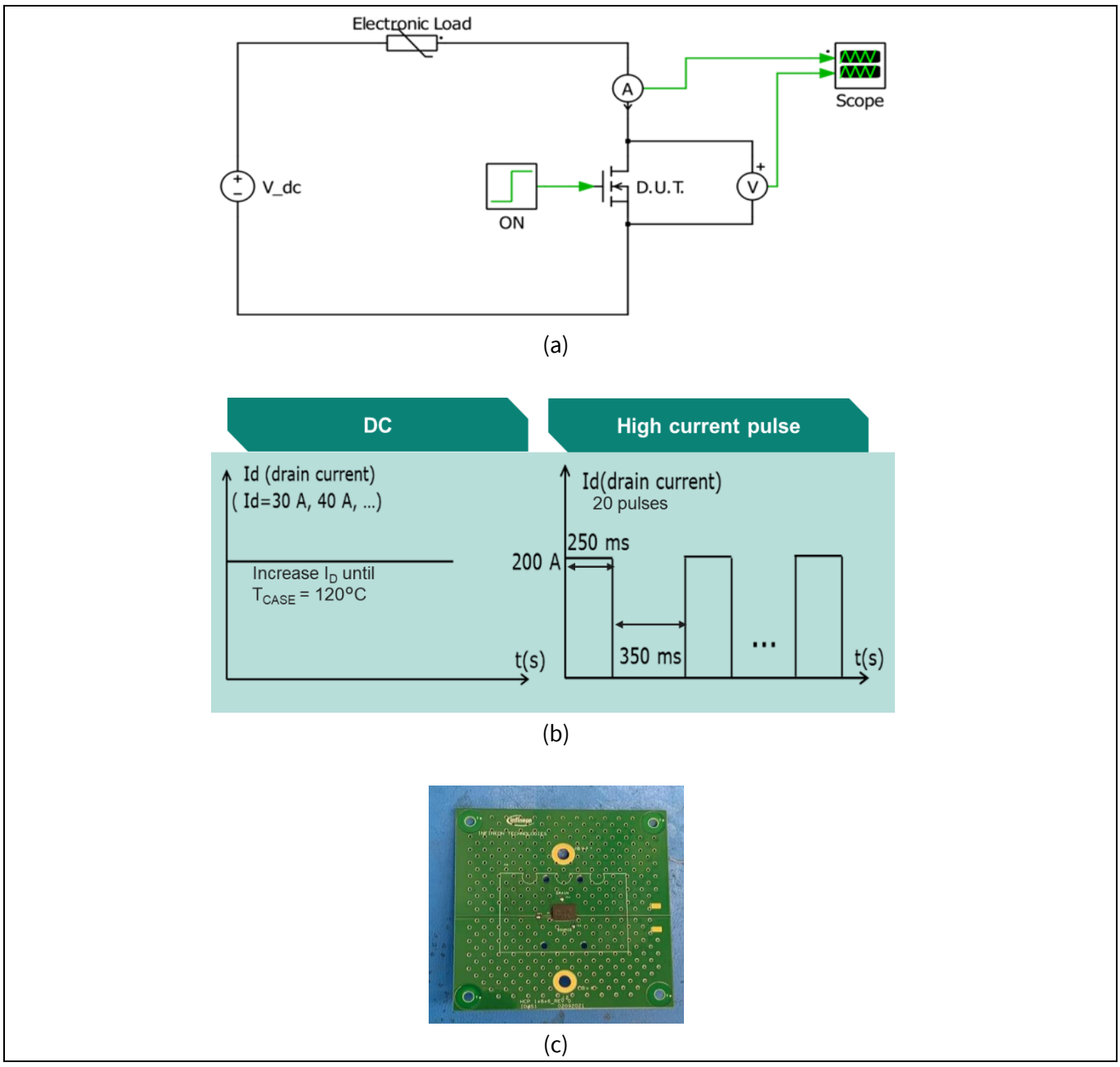

Figure 6 **(a) Test setup used for high-current pulse and DC test (b) Test condition used for high-current pulse and DC test (c) 3x3 in^2 PCB used for high-current pulse and DC test**

Experimental results

Figure 7 shows the comparison of BiC 60 V PQFN 8x6 package power MOSFETs against BiC 60 V SuperSO8 5x6, TOLL, and PQFN 8x8 package power MOSFETs for continuous current test after operation at maximum current for 10 minutes. High-current DC test is a good indicator of power MOSFET performance in motor-drive applications during locked rotor condition. It can be observed in Figure 7 that the PQFN 8x6 package power MOSFET devices outperforms larger packages such as PQFN 8x8 and TOLL leading to higher power-density in applications. Moreover, 2x SuperSO8 5x6 devices in parallel have larger die size than 1x PQFN 8x6 leading to higher current handling capability in high-current DC test. Additionally, 2x SuperSO8 5x6 devices in parallel will need tight $V_{GS(th)}$ in order to reduce dynamic current sharing issues in the application.

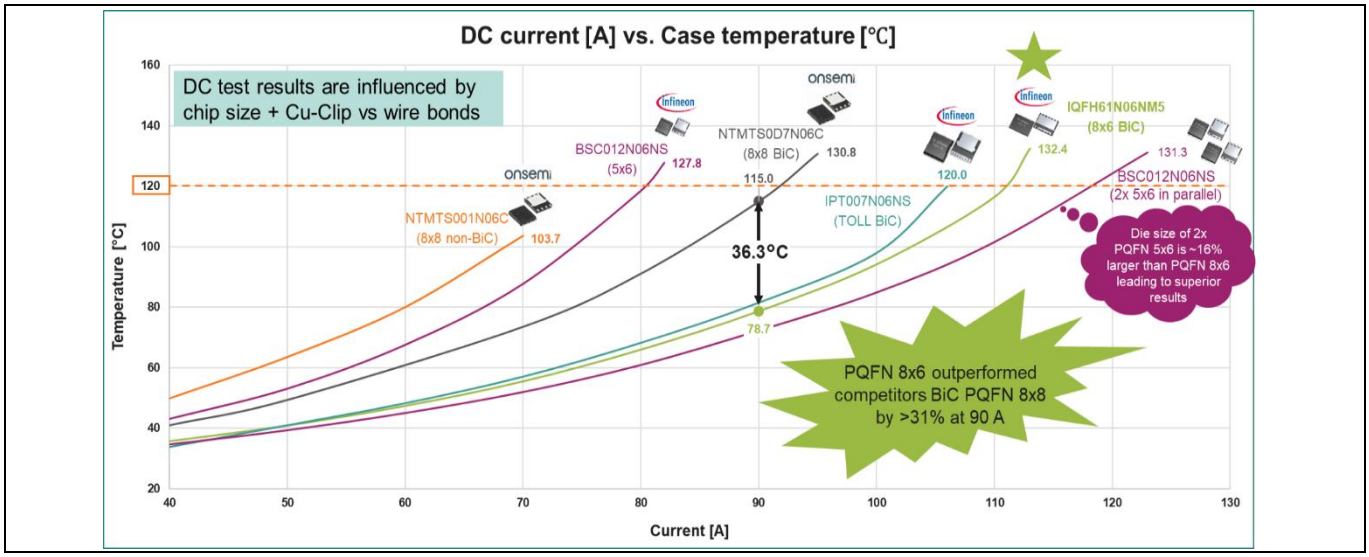

Figure 7 High-current DC test

Figure 8 shows the comparison of BiC 60 V PQFN 8x6 package power MOSFETs against BiC 60 V SuperSO8 5x6, TOLL, and PQFN 8x8 package power MOSFETs for high-current pulse tests. High-current pulse test is a good indicator of power MOSFET performance in motor-drive application. It can be observed in Figure 8 that BiC 60 V PQFN 8x6 package power MOSFETs have 36 percent lower case temperature than larger BiC 60 V PQFN 8x8 package power MOSFETs at 200 A. Since the high-current pulse test is strongly influenced by thermal capacity of a package – TOLL and 2x SuperSO8 5x6 outperforms PQFN 8x6 package power MOSFET.

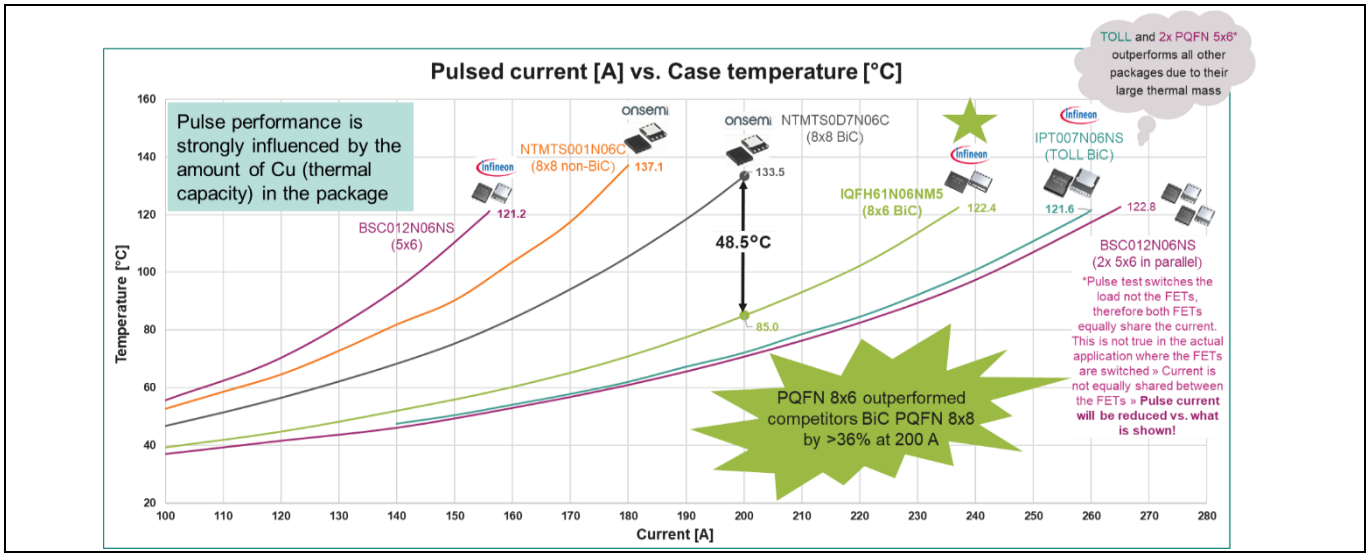

Figure 8 High-current pulse test

2.2 Three-phase motor-drive application

In order to evaluate the high-power density of PQFN 8x6 package, three-phase motor-drive application testing was performed on BiC 40 V and 60 V devices. For these tests, power handling capability of 1x PQFN 8x6 against 2x SuperSO8 5x6 devices in parallel was compared in a board that has a parallel combination of 1x PQFN 8x6 and 1x SuperSO8 5x6 in its power section so that these different package power MOSFETs could be tested on a board with similar system thermal resistance, R_{TH}. The PCB used for this testing is FR4 grade with 1.6 mm thickness with 6-layer board with 2 oz. copper on each layer.

Figure 9 shows the thermal data for steady-state operation after continuous operation at phase current of 48 A for 12 minutes for BiC 40 V 1x PQFN 8x6 device against BiC 40 V 2x SuperSO8 5x6 devices in parallel in a three-phase motor-drive application. It can be observed that similar output power levels were achieved for 1x PQFN 8x6 and 2x SuperSO8 5x6 devices in parallel.

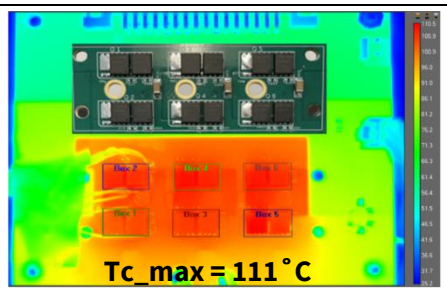

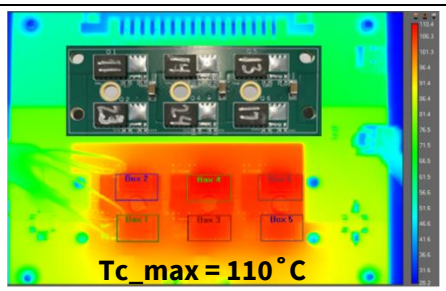

Part	Heatsink	V_{in} [V]	I_{in} [A]	I_{ph} (A rms)	P_{in} [W]	Effective $R_{DS(on)}$ max (mΩ)	P_{out} [W]	P_{loss} [W]	T_{c_max} [°C]
2x ISC007N04NM6 in Parallel	No	20	44	48	882	0.35	861	20	111
1x IQFH36N04NM6	No	20	44	48	882	0.36	861	20	110

Figure 9 Comparison between BiC OptiMOS™ 6 40 V power MOSFET technology in both 1x PQFN 8x6 and 2x SuperSO8 5x6 packages for three-phase motor-drive application

Similarly, Figure 10 shows the steady state operation after continuous operation at phase current of 41 A for 12 minutes for BiC 60 V 1x PQFN 8x6 device against BiC 60 V 2x SuperSO8 5x6 devices in parallel in a three-phase motor-drive application. It can be observed that similar output power levels were also achieved for 1x PQFN 8x6 and 2x SuperSO8 5x6 devices in parallel.

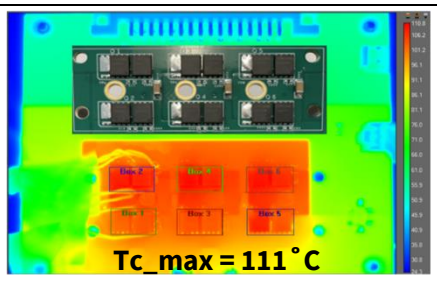

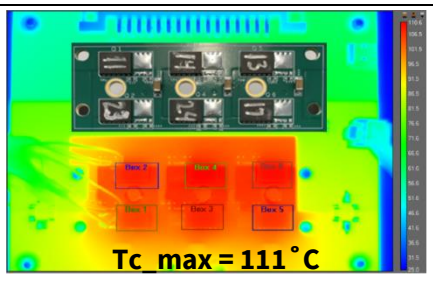

Part	Heatsink	V_{in} [V]	I_{in} [A]	I_{ph} (A rms)	P_{in} [W]	Effective $R_{DS(on)}$ max (mΩ)	P_{out} [W]	P_{loss} [W]	T_{c_max} [°C]
2x BSC012N06NS in Parallel	No	40	25	41	986	0.60	963	22	111
1x IQFH61N06NM5	No	40	24	41	974	0.61	952	22	111

Figure 10 Comparison between BiC OptiMOS™ 5 60 V power MOSFET technology in both 1x PQFN 8x6 and 2x SuperSO8 5x6 packages for three-phase motor-drive application

Experimental results

In conclusion from these tests, 1x PQFN 8x6 device has higher power-density than 2x SuperSO8 5x6 devices in parallel since if a dedicated PCB for these configurations were to be designed for motor-driver application – 1x PQFN 8x6 dedicated PCB would have a 27 percent reduction in board space required for MOSFETs. Moreover, in order to maximize current sharing due to MOSFET mismatches and PCB parasitic in 2x SuperSO8 5x6 devices in parallel in a half-bridge configuration, a gate-driver scheme as shown in Figure 11 is implemented. In this scheme, R_G can be tuned in order prevent current imbalance in parallel MOSFETs.

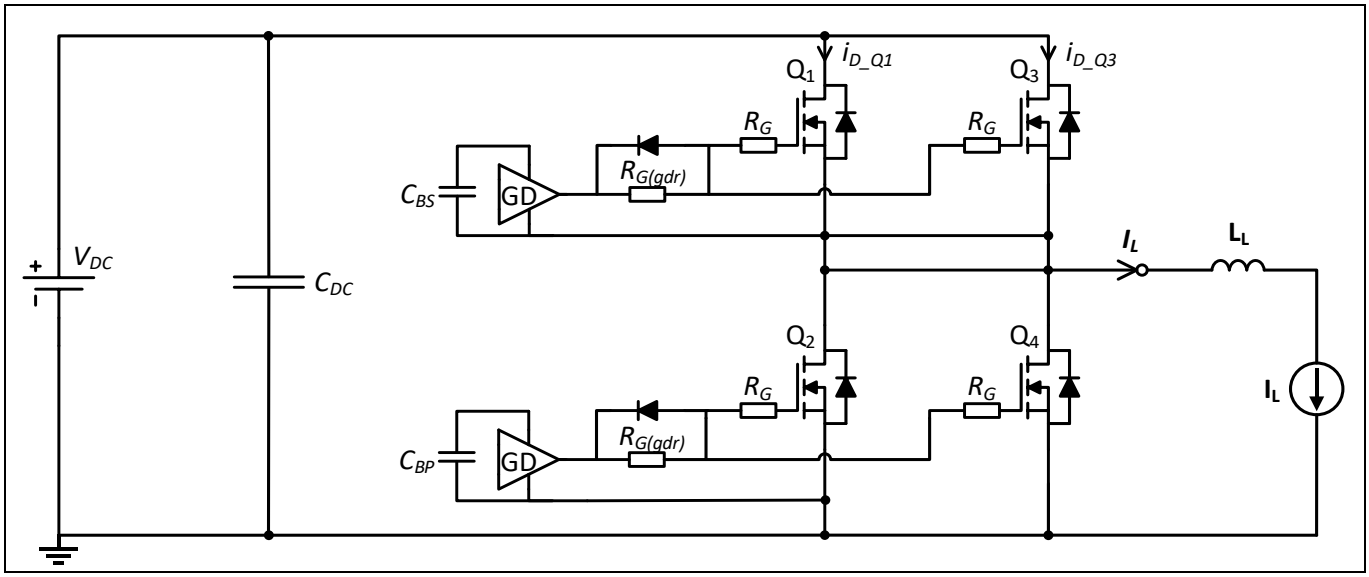

Figure 11 Gate-driver schemes for driving MOSFETs in parallel in a half-bridge configuration to prevent current imbalance

3 Summary

The new PQFN 8x6 package from Infineon's portfolio of industrial-grade power MOSFETs, high-power applications can be realized on a FR4 PCB instead of more expensive IMS PCB due to lower $R_{DS(ON)}$ and figure-of-merit (FOM) in a discrete package leading to lower conduction losses.

Additionally, in order to ensure best thermal performance, different measures were taken during development of the PQFN 8x6 package. These include fused source leads with symmetrically placed clip on the source post leading to larger contact area between clip and chip. When compared to competition PQFN 8x8 package power MOSFETs in 60 V, PQFN 8x6 package outperforms competition both in continuous and pulsed current test.

From three-phase motor-drive application testing, it can be observed that 1x PQFN 8x6 package can handle similar power level to 2x SuperSO8 5x6 package power MOSFETs in parallel leading to higher-power density. Additionally, the introduction of this package allows to fill the gap between mid-range (SuperSO8 5x6) and highest-performing (TOLL/TO) packages leading to a wider portfolio for Infineon for all power ranges. Combined with Infineon's leading MOSFET technology these products enable a performance which was unattainable before with devices with 50-70 mm^2 package size.

References

[1] Infineon Technologies AG: *Innovative “Source Down” technology*; Available online

[2] Infineon Technologies AG: *TO-leaded top-side cooling (TOLT) package power MOSFET*; Available online

Revision history

Document revision	Date	Description of changes
V 1.0	2024-12-05	Initial release

Trademarks
All referenced product or service names and trademarks are the property of their respective owners.

Edition 2024-12-05

Published by

Infineon Technologies AG

81726 Munich, Germany

© 2025 Infineon Technologies AG. All Rights Reserved.

Do you have a question about this document?

Email: erratum@infineon.com

Document reference

AN004358

Important notice

The information contained in this application note is given as a hint for the implementation of the product only and shall in no event be regarded as a description or warranty of a certain functionality, condition or quality of the product. Before implementation of the product, the recipient of this application note must verify any function and other technical information given herein in the real application. Infineon Technologies hereby disclaims any and all warranties and liabilities of any kind (including without limitation warranties of non-infringement of intellectual property rights of any third party) with respect to any and all information given in this application note.

The data contained in this document is exclusively intended for technically trained staff. It is the responsibility of customer's technical departments to evaluate the suitability of the product for the intended application and the completeness of the product information given in this document with respect to such application.

Warnings

Due to technical requirements products may contain dangerous substances. For information on the types in question please contact your nearest Infineon Technologies office.

Except as otherwise explicitly approved by Infineon Technologies in a written document signed by authorized representatives of Infineon Technologies, Infineon Technologies' products may not be used in any applications where a failure of the product or any consequences of the use thereof can reasonably be expected to result in personal injury.