Application Note AN-1115

IRS442(6,7,8) and IR442(6,7,8) Comparison

By Jason Nguyen, Min Fang, David New

Table of Contents

	Page
Introduction	1
Block Diagrams	2
Electrical Characteristic Differences	2
Summary	6

Introduction

The IRS442(6,7,8) are new products that replace the IR442(6,7,8) and are pin-to-pin compatible with each corresponding predecessor. In many cases, little or no change is necessary to use the new products. This application note describes the various differences between the IRS442(6,7,8) and the IR442(6,7,8) ICs.

The IR442(6,7,8)(S) and IRS442(6,7,8)(S) are a low voltage, high speed power MOSFET and IGBT drivers. Proprietary latch immune CMOS technologies enable ruggedized monolithic construction. Logic inputs are compatible with standard CMOS or LSTTL outputs. The output drivers feature a high pulse current buffer stage designed for minimum driver cross-conduction. Propagation delays between two channels are matched.

Block Diagrams

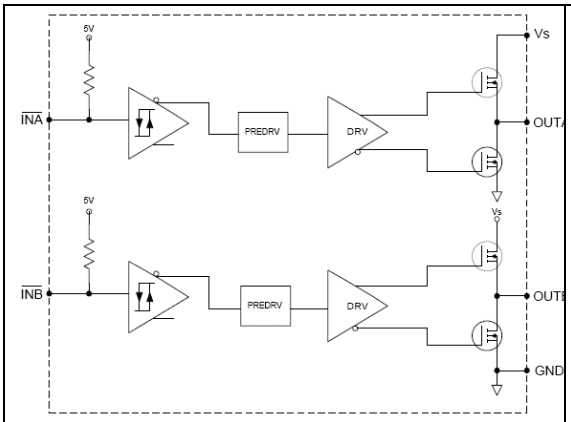

4426

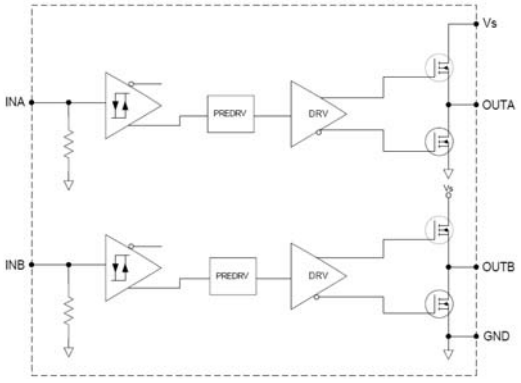

4427

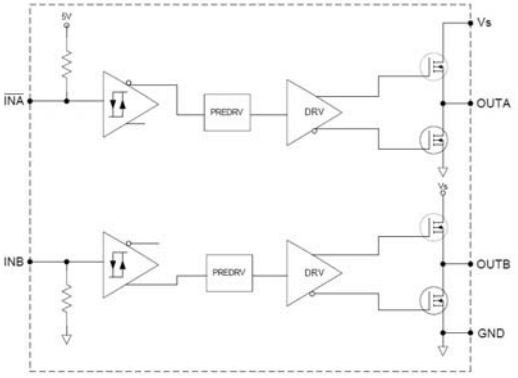

4428

4426 – Outputs out of phase with inputs

4427 – Outputs in phase with inputs

4428 – OutputA out of phase with inputA, OutputB in phase with inputB

The IRS442(6,7,8) share the same block diagram with each respective IR442(6,7,8). There are no functional changes between corresponding part numbers.

Electrical Characteristic Differences

All measurement conditions remain unchanged unless noted. Parameters not mentioned in this document have not changed.

Absolute Maximum Ratings

Parameter		IR442(6,7,8)		IRS442(6,7,8)		
Symbol	Definition	typ	max	typ	max	Units
V_S	Fixed supply voltage	-0.3	25	-0.3	20	V

For the IRS442(6,7,8), all supplies are fully tested at 25 V and an internal 20 V clamp exists for each supply. The 20 V, internal clamp improves the IC survivability against supply transient spikes but at the same time reduces the absolute maximum rating to 20 V.

Recommended Operating Conditions

There are no changes in the Recommended Operating Conditions.

Static Electrical Characteristics

Parameter		IR442(6,7,8)			IRS442(6,7,8)			Units
Symbol	Definition	min	typ	max	min	typ	max	
V_{IH}	Logic "0" input voltage (OUTA=L, OUTB=L) (4426) Logic "1" input voltage (OUTA=H, OUTB=H) (4427) Logic "0" input voltage (OUTA=L), Logic "1" input voltage (OUTB=H) (4428)	2.7	-	-	2.5	-	-	V
V_{IL}	Logic "1" input voltage (OUTA=H, OUTB=H) (4426) Logic "0" input voltage (OUTA=L, OUTB=L) (4427) Logic "1" input voltage (OUTA=H), Logic "0" input voltage (OUTB=L) (4428)	-	-	0.8	-	-	0.8	
V_{OH}	High level output voltage, V_{BIAS} - V_o	-	-	1.2	-	-	1.2	
		Io = 0 mA			Io = 0 mA			
V_{OL}	Low level output voltage, V_O	-	-	0.1	-	-	0.15	
		Io = 0 mA			Io = 20 mA			

With the IRS442(6,7,8),

1. The V_{IH} has been reduced to 2.5 V for better 3.3 V logic compatibility.
2. The V_{OL} is tested using a new standardized test condition of I_o=20 mA.

Dynamic Electrical Characteristics

Parameter		IR442(6,7,8)		IRS442(6,7,8)		Units
Symbol	Definition	typ	max	typ	max	
t_{d1}	Turn-on propagation delay	85	160	35	70	ns
t_{d2}	Turn-off propagation delay	65	150	35	70	

The IRS442(6,7,8) has faster rise and fall times when compared to the IR442(6,7,8).

Figures

This figures shown in this section compare figures shown in the IR442(6,7,8) (left column) and IRS442(6,7,8) (right column) datasheets. Illustrations that have not changed between the two datasheets have not been included in this section.

IR442(6,7,8)

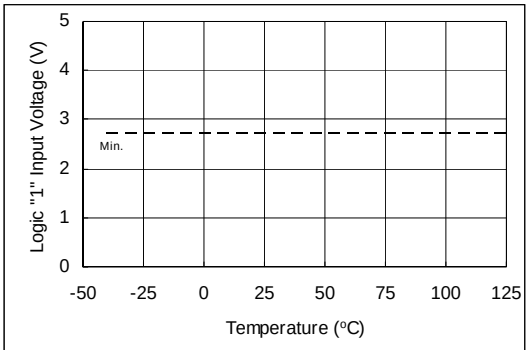

Figure 6A. Logic "1" Input Voltage vs. Temperature

IRS442(6,7,8)

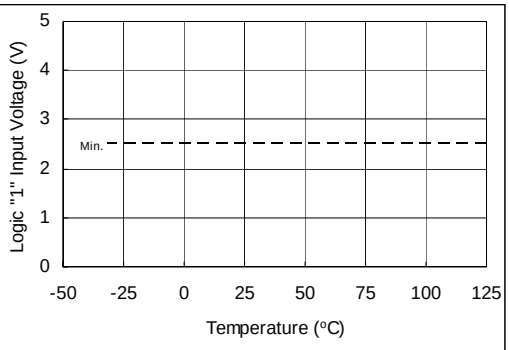

Figure 6A. Logic "1" Input Voltage vs. Temperature

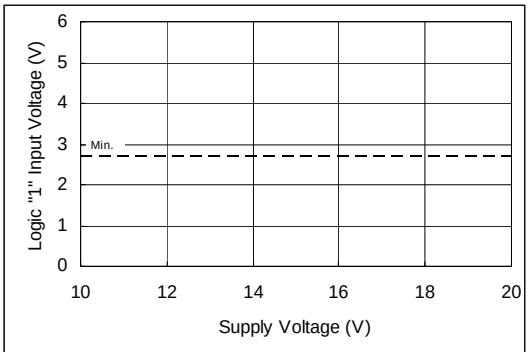

Figure 6B. Logic "1" Input Voltage vs. Supply Voltage

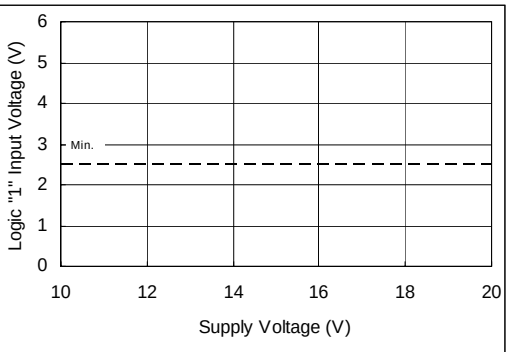

Figure 6B. Logic "1" Input Voltage vs. Supply Voltage

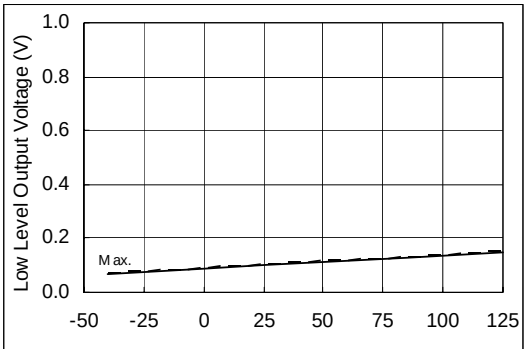

Figure 9A. Low Level Output Voltage vs.Temperature (Io = 0mA)

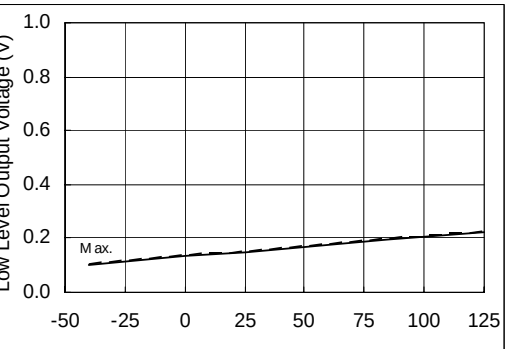

Figure 9A. Low Level Output Voltage vs.Temperature (Io = 20mA)

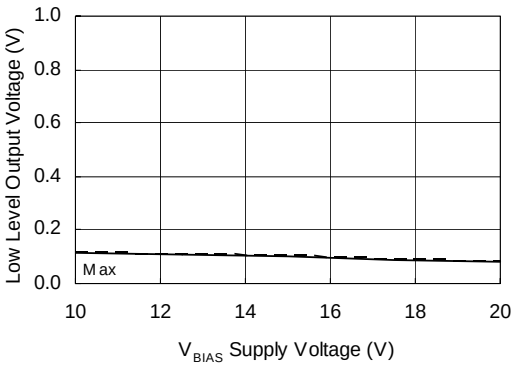

Figure 9B. Low Level Output vs. Supply Voltage (Io = 0mA)

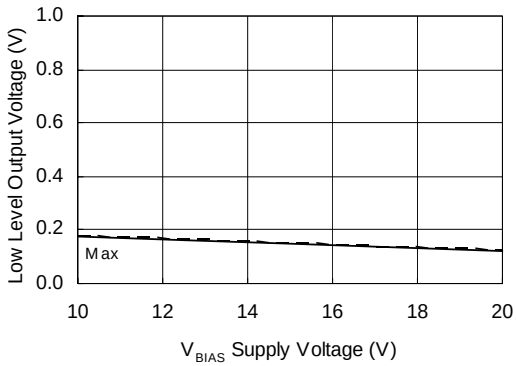

Figure 9B. Low Level Output vs. Supply Voltage (Io = 20mA)

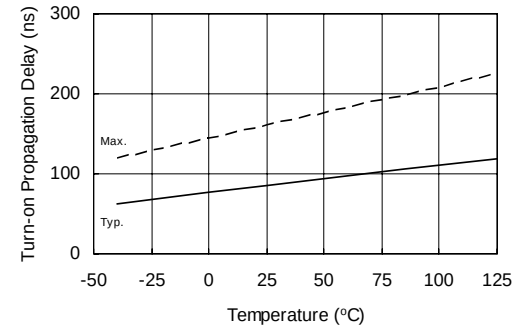

Figure 15A. Turn-on Propagation Delay vs. Temperature

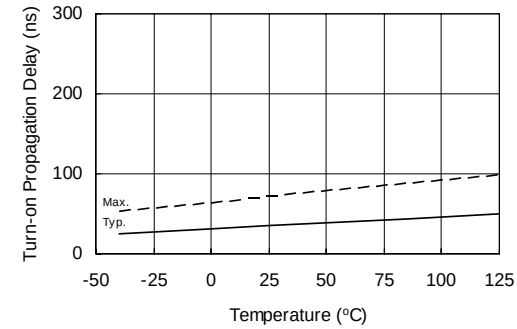

Figure 15A. Turn-on Propagation Delay vs. Temperature

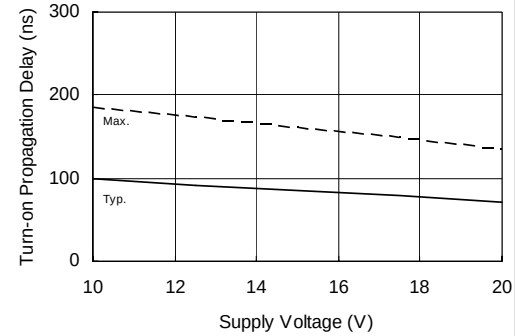

Figure 15B. Turn-on Propagation Delay vs. Supply Voltage

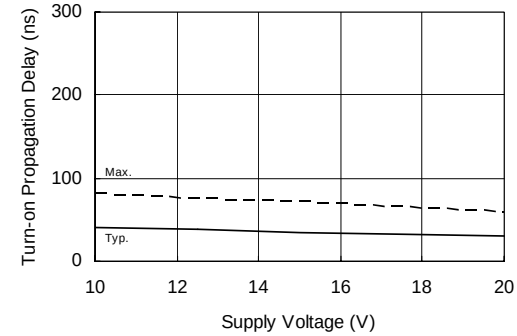

Figure 15B. Turn-on Propagation Delay vs. Supply Voltage

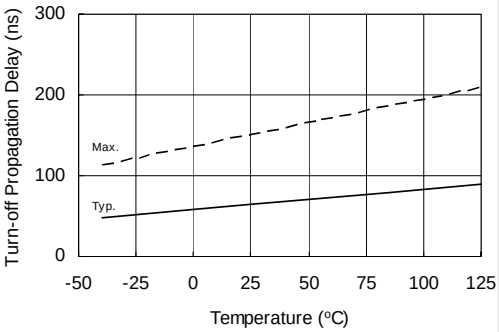

Figure 16A. Turn-off Propagation Delay vs. Temperature

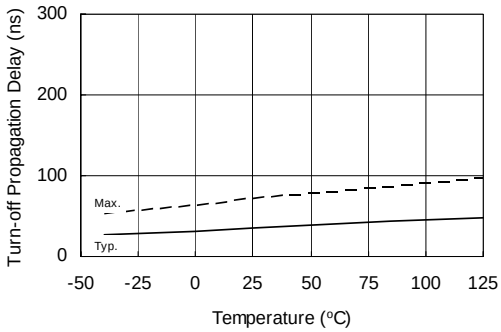

Figure 16A. Turn-off Propagation Delay vs. Temperature

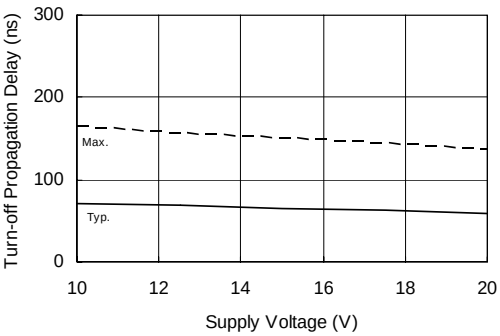

Figure 16B. Turn-off Propagation Delay vs. Supply Voltage

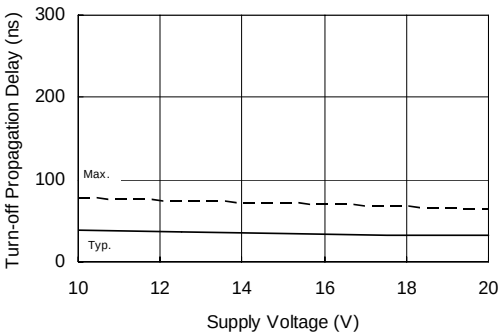

Figure 16B. Turn-off Propagation Delay vs. Supply Voltage

Summary

As shown by this document, the IRS442(6,7,8) and the IR442(6,7,8) are very similar with only a few negligible parametric differences.