# Application Note AN-1105

## IRS2308 and IR2308 Comparison

*By Jason Nguyen, Min Fang, David New*

Table of Contents

| | Page |
|---|---|
| Introduction | 1 |
| Block Diagram | 2 |
| Electrical Characteristic Differences | 2 |
| Summary | 3 |

## Introduction

The IRS2308 is a new product that replaces the IR2308 HVIC and is pin-to-pin compatible with its corresponding predecessor. In many cases, little or no change is necessary to use the new product. This application note describes the various differences between the IRS2308 and the IR2308 HVICs.

The IRS2308 is a high voltage, high speed power MOSFET and IGBT driver with independent high and low side referenced output channels. Proprietary HVIC and latch immune CMOS technologies enable ruggedized monolithic construction. The logic input is compatible with standard CMOS or LSTTL outputs, down to 3.3 V logic. The output drivers feature a high pulse current buffer stage designed for minimum driver cross-conduction. The floating channel can be used to drive an N-channel power MOSFET or IGBT in the high side configuration which operates up to 600 V.

## Block Diagram

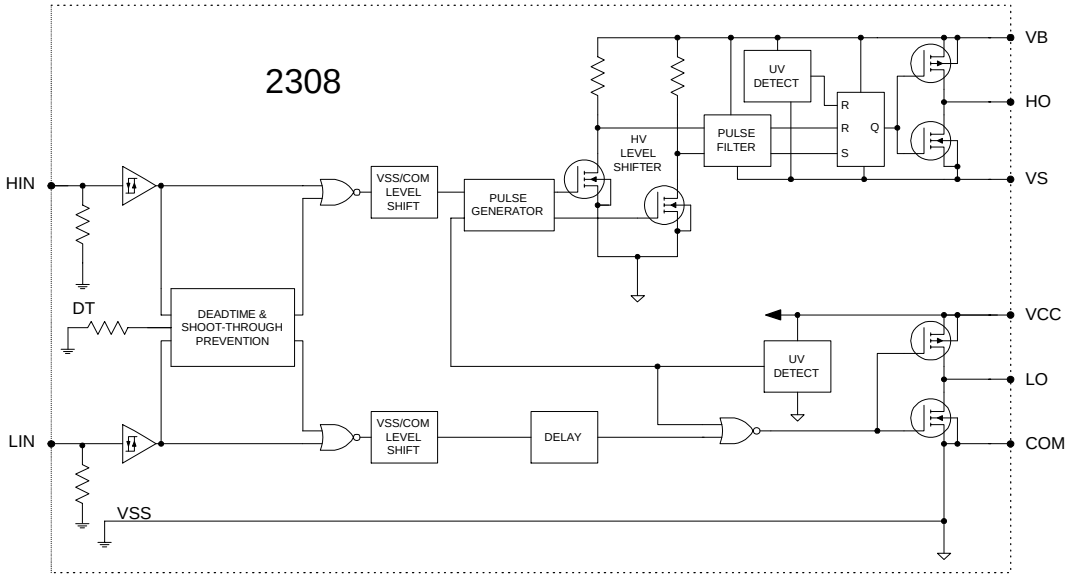


The IRS2308 and the IR2308 share the same block diagram. The functionality of the two ICs is the same.

## Electrical Characteristic Differences

All measurement conditions remain unchanged unless noted. Parameters not mentioned in this document have not changed.

### Absolute Maximum Ratings

There are no changes in the Absolute Maximum Ratings.

### Recommended Operating Conditions

There are no changes in the Recommended Operating Conditions.

## Dynamic Electrical Characteristics

| Parameter | | IR2308 | | IRS2308 | | Units |
|---|---|---|---|---|---|---|
| Symbol | Definition | typ | max | typ | max | |
| $t_r$ | Turn-on rise time (Vs = 0 V) | 150 | 220 | 100 | 220 | ns |
| $t_f$ | Turn-off fall time (Vs = 0 V) | 50 | 80 | 35 | 80 | |

The IRS2308 has faster rise and fall times when compared to the IR2308.

## Static Electrical Characteristics

| Parameter | | IR2308 | | | IRS2308 | | | Units |
|---|---|---|---|---|---|---|---|---|
| Symbol | Definition | min | typ | max | min | typ | max | |
| $V_{IH}$ | Logic "1" input voltage ($V_{CC}$ = 10 V to 20 V) | 2.9 | - | - | 2.5 | - | - | V |
| $V_{IL}$ | Logic "0" input voltage ($V_{CC}$ = 10 V to 20 V) | - | - | 0.8 | - | - | 0.8 | |
| $V_{OH}$ | High level output voltage, $V_{BIAS}$ - $V_O$ ($I_O$ = 20 mA) | - | 0.8 | 1.4 | - | 0.05 | 0.2 | |
| | | Io = 20 mA | | | Io = 2 mA | | | |
| $V_{OL}$ | Low level output voltage, $V_O$ ($I_O$ = 20 mA) | - | 0.3 | 0.6 | - | 0.02 | 0.1 | |
| | | Io = 20 mA | | | Io = 2 mA | | | |
| $I_{O+}$ | Output high short circuit pulsed current ($V_O$ = 0 V, VIN=Logic "1", PW <= 10us) | 120 | 200 | - | 120 | 290 | - | mA |
| $I_{O-}$ | Output low short circuit pulsed current ($V_O$ = 15 V, VIN = Logic "0", PW <= 10us) | 250 | 350 | - | 250 | 600 | - | |

With the IRS2308,

1. The $V_{IH}$ is reduced to 2.5 V for better 3.3 V logic compatibility.
2. The $V_{OH}$ and $V_{OL}$ are tested using a new standardized test condition of Io=2 mA. The output driver on resistance is lower for IRS2308, which improves immunity against the Miller effect.
3. The typical values for $I_{O+}$ and $I_{O-}$ are increased, which allows faster switching.

## Summary

As shown by this document, the IRS2308 and the IR2308 are very similar with only a few negligible parametric differences.