Improving PFC efficiency using the CoolSiC™ Schottky diode 650 V G6

About this document

Scope and purpose

This engineering report describes the advantages of using the CoolSiC™ Schottky diode 650 V G6 in boost converters for power factor correction. The study includes an efficiency comparison with the previous generation of CoolSiC™ diodes and also gives an insight into the thermal properties and surge current capabilities, with some design recommendations. In addition, the current rating selection guide is given for easier diode selection to enable shaping the efficiency curve of the power supply.

Intended audience

This application note is intended for application engineers, power supply designers and academics working with high-efficiency and high-density power supplies with a focus on optimizing the boost stage of an AC-DC converter.

Table of contents

About this document **1**
Table of contents **1**
1 Introduction **2**
2 Lower forward voltage enables improved efficiency **3**
3 Shape the efficiency curve by using a different current rating for the boost diode **5**
4 Lower conduction losses keep the boost diode cooler **7**
5 Protect PFC circuit against surge current with bypass diode **9**
5.1 Surge immunity test using the bypass diode 10
5.2 Surge immunity test without bypass diode 12
6 Conclusion **13**
7 Revision history **14**

1 Introduction

The CoolSiC™ Schottky diode 650 V G6 is the sixth generation (G6) of Infineon's silicon carbide (SiC) Schottky diodes, with a maximum blocking voltage of 650 V. CoolSiC™ G6 was designed to improve efficiency and to enable compact power supply designs. The CoolSiC™ Schottky diode 650 V G6 is a state-of-the-art of SiC diode, offering the lowest forward voltage and obtaining the highest efficiency. The benefit of the forward voltage reduction is visible in the lower conduction losses.

The CoolSiC™ Schottky diode 650 V G6 is built on the previous generations' technical achievements. The merged diode structure was introduced in the CoolSiC™ G2 diodes. In this structure, a Schottky and a bipolar diode were merged in order to have very low conduction losses and high surge current capability at the same time. Subsequently, the third and fifth generation introduced additional advances, enhancing efficiency, density and robustness. The sixth-generation CoolSiC™ introduced lower forward voltage as result of the re-designed diode structure.

The performance measurements of the CoolSiC™ G6 diodes were carried out using the Infineon demo board shown in Figure 1 (800 W 65 kHz[A] and 130 kHz[B] Platinum® server power factor correction evaluation board). The investigation involved diodes with different current ratings, which were tested in the same application, under the same conditions. The boost diode tuning in the power factor correction (PFC) stage gives an opportunity to optimize the power supply in order to reach a certain efficiency class (i.e. Titanium® standard).



Figure 1 800 W Platinum® server power factor correction evaluation board

This paper includes also recommendations on how to properly handle surge current in the PFC circuits in order to enable high surge immunity. In addition, investigations obtaining surge immunity tests were carried out by using the 800 W PFC evaluation board in order to prove that the CoolSiC™ Schottky diode 650 V G6 is the right solution for any highly efficient power supply.

[A] ApplicationNote_EvaluationBoard_EVAL_800W_PFC_P7-AN-v01_00-EN.pdf

[B] ApplicationNote_EvaluationBoard_EVAL_800W_130PFC_C7-AN-v01_00-EN.pdf

2 Lower forward voltage enables improved efficiency

Thanks to the best-in-class forward voltage, the CoolSiC™ Schottky diode 650 V G6 enables an efficiency improvement over a wide load range. In order to make a fair comparison between the CoolSiC™ G6 and G5, the same current rating was used (see Table 1).

Table 1 Devices under test

DUT	V_F, at 25°C	I_F, at 25°C	Package	Family
IDH06G65C6	1.25 V	6 A	PG-TO220-2	CoolSiC™ Schottky diode 650 V G6
IDH06G65C5	1.5 V	6 A	PG-TO220-2	CoolSiC™ Schottky diode 650 V G5

Tables 2 and 3 and Figures 2 and 3 give the efficiency results of the 800 W PFC board operating under different conditions. This efficiency test[A] was performed at different input voltages (115 V AC and 230 V AC), at different switching frequencies (65 kHz and 130 kHz) and at different output power points (e.g. 10%, 20%, … , 100%).

Table 2 and Figure 2 show the difference in the efficiency of the 800 W PFC board operating at 65 kHz switching frequency where the boost diode IDH06G65C5 was replaced by IDH06G65C6.

Table 2 Measured efficiency of the 800 W PFC board at 65 kHz switching frequency

	Efficiency at V_{IN} = 115 V AC and f_{sw} = 65 kHz			Efficiency at V_{IN} = 230 V AC and f_{sw} = 65 kHz		
P_{out}	IDH06G65C6	IDH06G65C5	ΔEfficiency	IDH06G65C6	IDH06G65C5	ΔEfficiency
20%	95.93%	95.87%	+0.06%	97.15%	97.07%	+0.08%
40%	96.49%	96.46%	+0.03%	97.85%	97.80%	+0.05%
60%	96.38%	96.32%	+0.06%	98.07%	98.01%	+0.06%
80%	96.05%	95.98%	+0.07%	98.11%	98.06%	+0.05%
100%	95.57%	95.54%	+0.03%	98.10%	98.05%	+0.05%

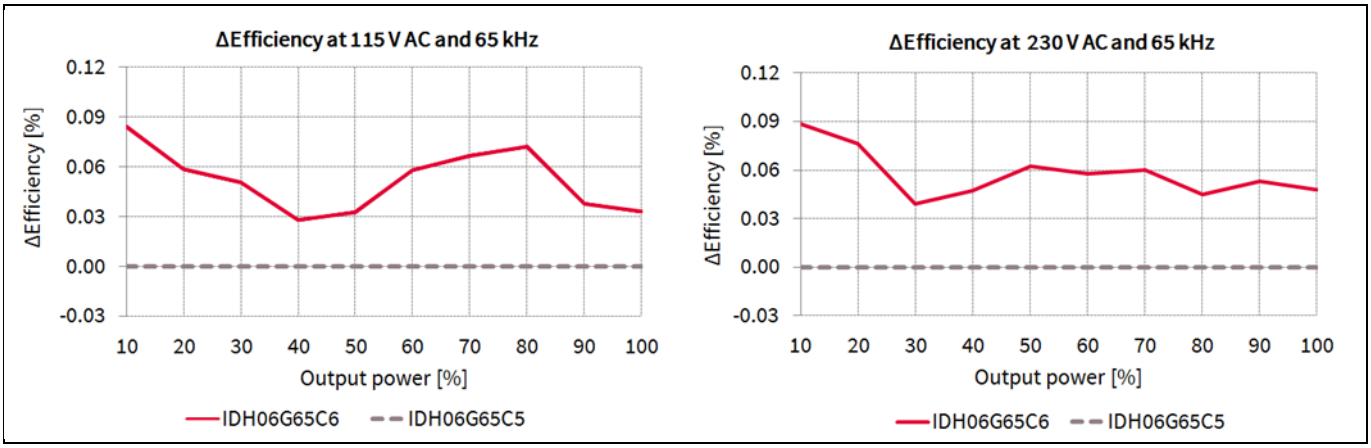

Figure 2 Measured efficiency of the 800 W PFC board at 65 kHz – CoolSiC™ G6 vs G5

[A] In this efficiency test the fan was supplied externally with 12 V DC and running continuously over the complete test.

Lower forward voltage enables improved efficiency

The second case shows efficiency results using the same boost diodes, only switching frequency was increased to 130 kHz. Table 3 shows measured efficiency results of the 800 W PFC board. Figure 3 illustrates the difference between the CoolSiC™ G6 and G5, where the CoolSiC™ G5 is taken as a reference.

Table 3 Measured efficiency of the 800 W PFC board at 130 kHz switching frequency

	Efficiency at V_{IN} = 115 V AC and f_{sw} = 130 kHz			Efficiency at V_{IN} = 230 V AC and f_{sw} = 130 kHz		
P_{out}	IDH06G65C6	IDH06G65C5	ΔEfficiency	IDH06G65C6	IDH06G65C5	ΔEfficiency
20%	95.42%	95.35%	+0.07%	96.95%	96.91%	+0.04%
40%	96.28%	96.22%	+0.06%	97.74%	97.69%	+0.05%
60%	96.35%	96.30%	+0.05%	98.00%	97.95%	+0.05%
80%	96.14%	96.09%	+0.05%	98.09%	98.04%	+0.05%
100%	95.79%	95.75%	+0.04%	98.12%	98.08%	+0.04%

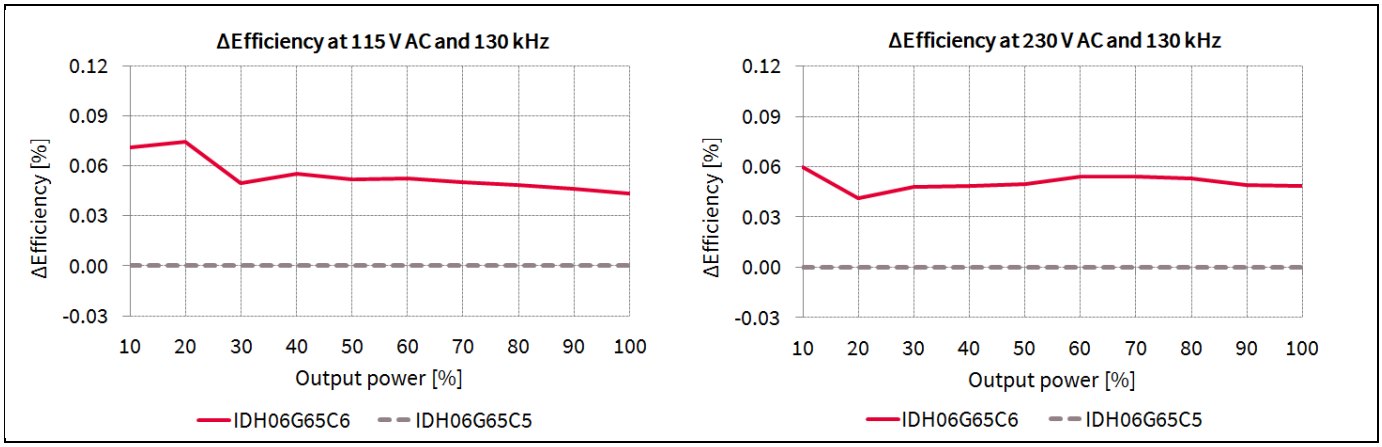

Figure 3 Measured efficiency of the 800 W PFC board at 130 kHz – CoolSiC™ G6 vs G5

The comparison shows the efficiency improvement of the CoolSiC™ Schottky diode 650 V G6 over a wide load range at any input voltage and switching frequency. This particular PFC board shows an average 0.05% efficiency improvement of the CoolSiC™ G6 compared to the previous generation (CoolSiC™ G5), what translates in 1% improvement in the power losses.

3 Shape the efficiency curve by using a different current rating for the boost diode

Power supply designers have the opportunity to shape the efficiency curve in the expected load range, by simply playing with different current ratings of the boost diode. In order to analyze the impact of the boost diode on the efficiency, a feasibility study using the 800 W PFC board was carried out, in which two different current ratings from the CoolSiC™ Schottky diode 650 V G6 family (see Table 4) were taken into account.

Table 4 Devices under test

DUT	V_F, at 25°C	I_F, at 25°C	Package	Family
IDH06G65C6	1.25 V	6 A	PG-TO220-2	CoolSiC™ Schottky diode 650 V G6
IDH10G65C6	1.25 V	10 A	PG-TO220-2	CoolSiC™ Schottky diode 650 V G6

Table 5 consists of the measured efficiency values for the 6 A and 10 A diode, evaluated in the 800 W PFC board at a switching frequency of 65 kHz. To enable easier and more effective comparison between different current ratings, the efficiency difference for 10 A was calculated against the 6 A diode. Figure 4 illustrates the efficiency comparison between diodes IDH06G65C6 (orange line) and IDH10G65C6 (green dashed line), where the first one is taken as a reference.

Table 5 Measured efficiency of the 800 W PFC board at 65 kHz using a different diode current rating

	Efficiency at V_{IN} = 115 V AC and f_{sw} = 65 kHz			Efficiency at V_{IN} = 230 V AC and f_{sw} = 65 kHz		
P_{out}	IDH06G65C6	IDH10G65C6	ΔEfficiency	IDH06G65C6	IDH10G65C6	ΔEfficiency
20%	95.92%	95.90%	-0.02%	97.15%	97.11%	-0.04%
40%	96.49%	96.53%	+0.04%	97.85%	97.87%	+0.02%
60%	96.38%	96.42%	+0.04%	98.07%	98.09%	+0.02%
80%	96.05%	96.14%	+0.09%	98.11%	98.16%	+0.05%
100%	95.57%	95.72%	+0.15%	98.10%	98.16%	+0.06%

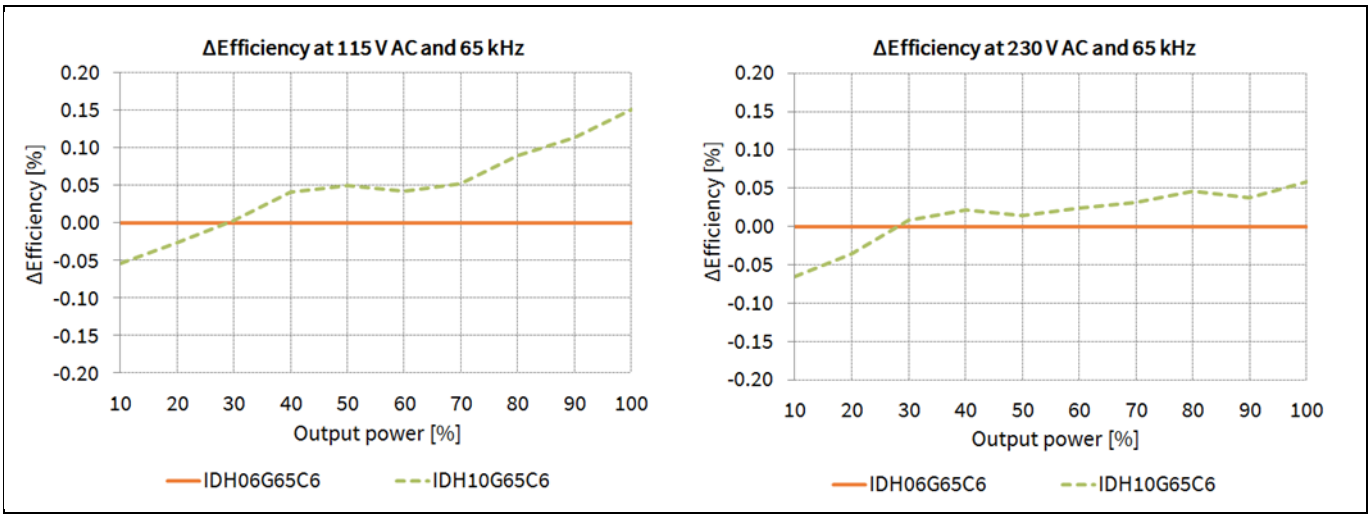

Figure 4 Measured efficiency of the 800 W PFC board at 65 kHz – IDH06G65C6 vs IDH10G65C6

Shape the efficiency curve by using a different current rating for the boost diode

Table 6 shows the measured efficiency values for the 6 A and 10 A diode, evaluated in the 800 W PFC board at a switching frequency of 130 kHz. Figure 5 illustrates the efficiency comparison between diodes IDH06G65C6 (orange line) and IDH10G65C6 (green dashed line), where the first one is taken as a reference.

Table 6 Efficiency of the 800 W PFC board at 130 kHz using a different current rating for the boost diode

	Efficiency at V_{IN} = 115 V AC and f_{sw} = 130 kHz			Efficiency at V_{IN} = 230 V AC and f_{sw} = 130 kHz		
P_{out}	IDH06G65C6	IDH10G65C6	ΔEfficiency	IDH06G65C6	IDH10G65C6	ΔEfficiency
20%	95.42%	95.32%	-0.10%	96.95%	96.92%	-0.03%
40%	96.28%	96.21%	-0.07%	97.74%	97.73%	-0.01%
60%	96.35%	96.39%	+0.04%	98.00%	98.00%	+0.00%
80%	96.14%	96.24%	+0.10%	98.09%	98.11%	+0.02%
100%	95.79%	95.98%	+0.19%	98.12%	98.17%	+0.05%

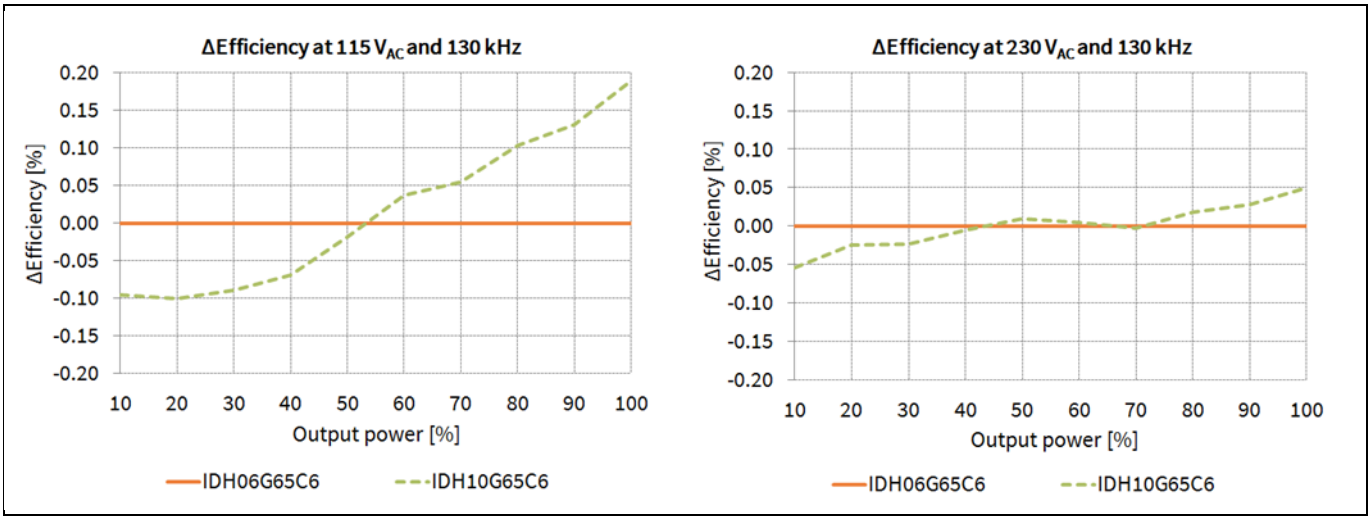

Figure 5 Measured efficiency of the 800 W PFC board at 130 kHz – IDH06G65C6 vs IDH10G65C6

The difference in efficiency between low-line and high-line is due to the different current flowing through the circuit. In order to transfer the same power to the output, the current at low-line (115 V AC) should be double that at high-line (230 V AC). At high-line, there is less current flowing through the boost diode, reducing the conduction losses and enabling higher efficiency over a wide load range. Considering this, the boost diode operates in different regions of the forward characteristic, resulting in different efficiency of the power supply.

The result shows that increased current rating enables an improvement in efficiency, which is an effect, linked to the lower conduction losses. In the 800 W PFC board, the boost diode replacement enables an efficiency improvement of up to 0.2% at maximum output power when the 6 A diode is replaced by a 10 A diode.

On the other side, the lower current rate diode behaves better at light load due to the lower capacitive charge (Q_c), which enables lower switching losses.

The balance between light and full load efficiency and current rating of the boost diode gives an opportunity to optimize power supply to get the best fit according to the price and performance requirements.

4 Lower conduction losses keep the boost diode cooler

The CoolSiC™ Schottky diode 650 V G6 enables higher efficiency through lower power losses, and this reduction in turn helps keep the device cool.

In order to make a junction temperature comparison between the CoolSiC™ G6 and G5, the same current rate diode was used (see Table 7). The analysis was performed with the simulation tool PLECS 4.0.4, equipped with an accurate implementation of the thermal characteristics and loss mechanism of the simulated device.

Table 7 Devices under test

DUT	V_F, at 25°C	I_F, at 25°C	Package	Family
IDH06G65C6	1.25 V	6 A	PG-TO220-2	CoolSiC™ Schottky diode 650 V G6
IDH06G65C5	1.5 V	6 A	PG-TO220-2	CoolSiC™ Schottky diode 650 V G5

In Table 8, the thermal characteristics of the devices being tested are shown. R_{th} and C_{th} values were derived from measurements performed in the characterization lab. These values were implemented in the equivalent thermal circuit (Cauer model), in order to create a thermal network and simulate the junction temperature of the diode.

Table 8 Thermal characteristics of the devices under test

DUT	R_{TH1} [K/W]	R_{TH2} [K/W]	R_{TH3} [K/W]	R_{TH4} [K/W]	C_{TH1} [K/W]	C_{TH2} [K/W]	C_{TH3} [K/W]	C_{TH4} [K/W]
IDH06G65C6	0.5011	0.7494	0.3157	0.1261	1.790E-4	9.371E-4	1.530E-2	3.863E-1
IDH06G65C5	0.4227	0.6302	0.2838	0.0943	2.481E-4	1.545E-3	2.534E-2	6.787E-1

Figure 6 illustrates the CoolSiC™ diode thermal network, which is used as a model to simulate the thermal behavior of the device. The thermal network is the same for diodes from both generations. However, the thermal parameters slightly differ.

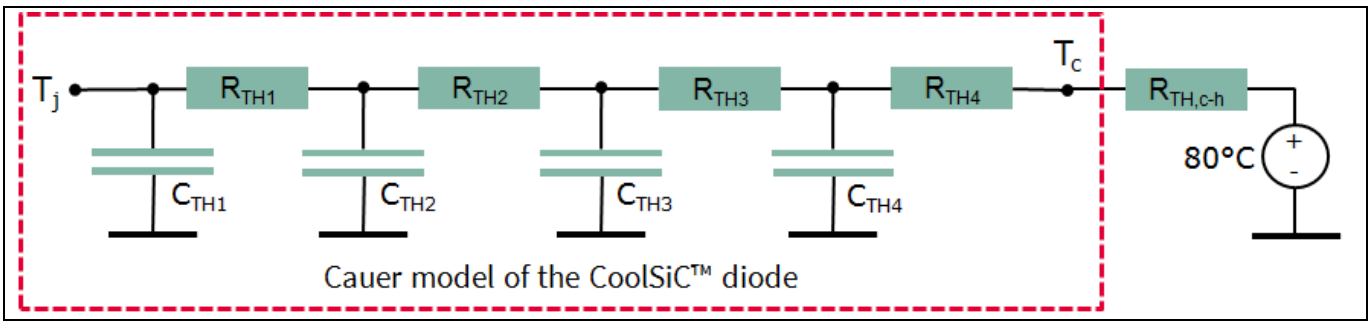

Figure 6 Thermal network used in the simulation tool

Since conduction losses create the majority of the heat in full-load operation and at lower input voltages, the simulation focuses only on these. In the simulation, the forward characteristics available in datasheets at different temperatures such as 25°C and 100°C were implemented.

Lower conduction losses keep the boost diode cooler

In order to bring the simulation close to real conditions, the 800 W PFC evaluation board was selected to capture the current through the boost diode in steady-state operation. In Figure 7, the current flowing through the boost diode was captured when the board was running under the following conditions: V_{IN} = 90 V AC, f_{sw} = 130 kHz, P_{out} = 800 W. Figure 7 illustrates the period of 100 µs when the current through the diode reaches peak value (at the 90° phase according to the input voltage).

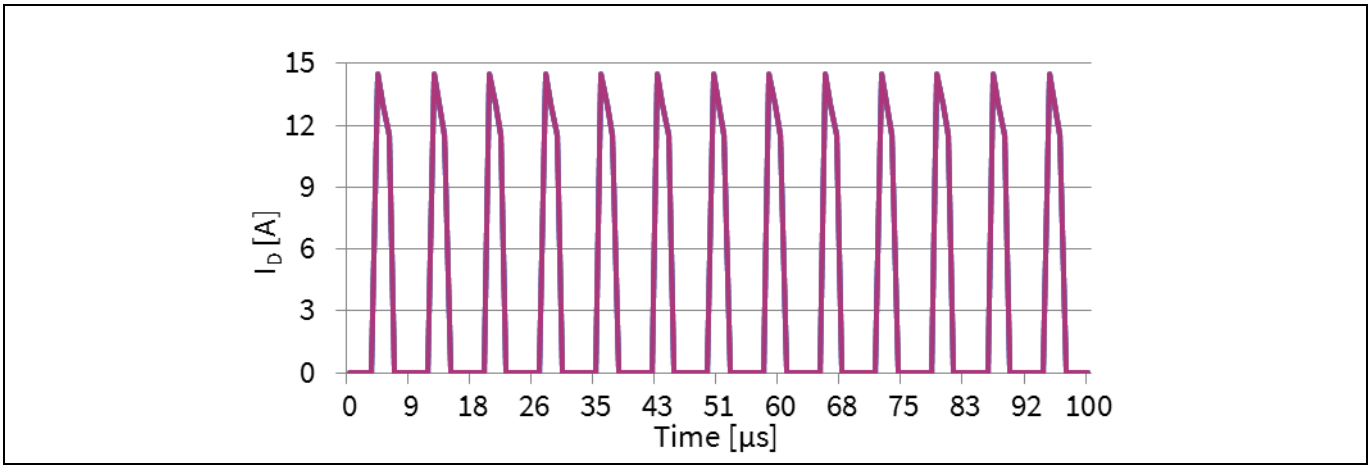

Figure 7 Measured current through the boost diode at V_{in} = 90 V AC, f_{sw} = 130 kHz and P_{out} = 800 W

The diode current (I_D) given in Figure 7 was implemented in the simulation model as a current source which was forcing the current through the boost diode. The current source was supplying both diodes under test with pulses with the same current signal in order to enable a comparison to be made in terms of thermal behavior. Thermal simulation using PLECS consisted of the current source and the devices under test, which were placed on the same heatsink. The simulation model was carried out with the following assumptions:

- Initial junction and case temperatures of both DUTs: $T_{j,initial}$ = 80°C, $T_{C,initial}$ = 80°C
- Fixed heatsink temperature: T_h = 80°C
- Thermal resistance case – heatsink: $R_{TH,c-h}$ = 3 K/W

Figure 8 reports the results of the thermal simulation under the described conditions. The graph shows the difference in junction temperature between the CoolSiC™ G6 (red line) and G5 (grey dashed line). It can be seen that the CoolSiC™ G6 stays cooler – at approximately 1°C lower after 100 µs.

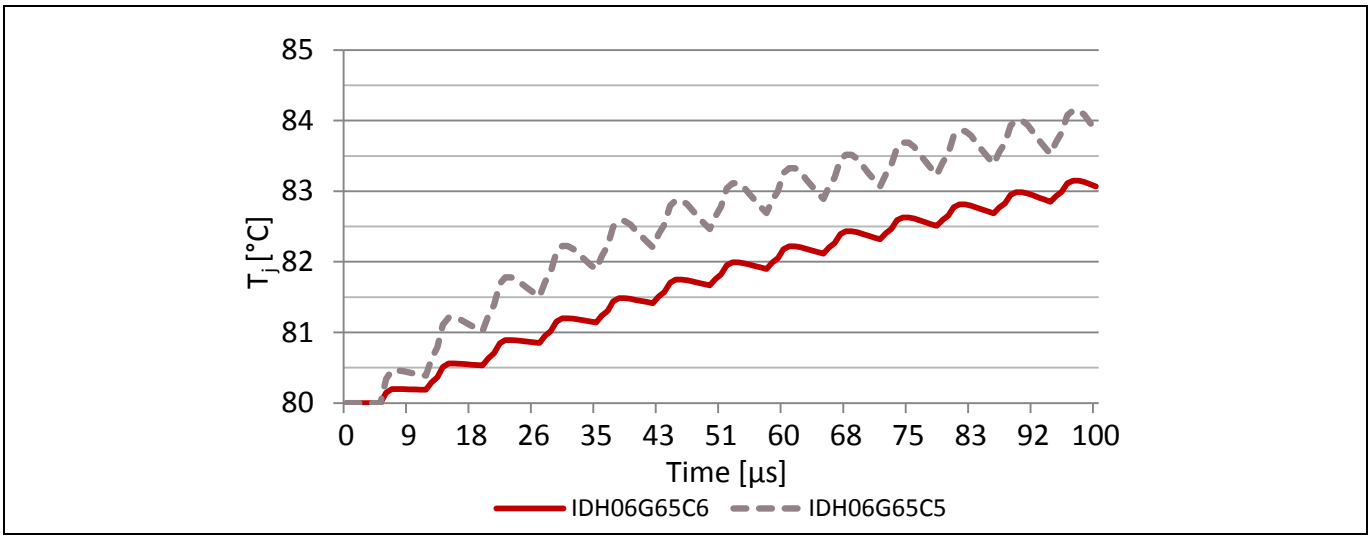

Figure 8 Simulated junction temperature comparison at V_{in} = 90 V AC, f_{sw} = 130 kHz and P_{out} = 800 W

5 Protect PFC circuit against surge current with bypass diode

The optimization process behind the new sixth generation of Schottky diodes reduced conduction losses, but at the same time caused the lowering of the surge current parameters in certain areas. However, the resulting performance of the CoolSiC™ G6 fulfills application requirements well.

With the adoption of SiC Schottky diodes in PFC topologies, a bypass diode has been used in order to restrict the forward current through the SiC diode in case a surge current affects the mains power supply. Figure 9 illustrates how the bypass diode in a classic PFC should be implemented. The bypass diode conducts only when the rectified voltage is higher than the output voltage (e.g. surge events).

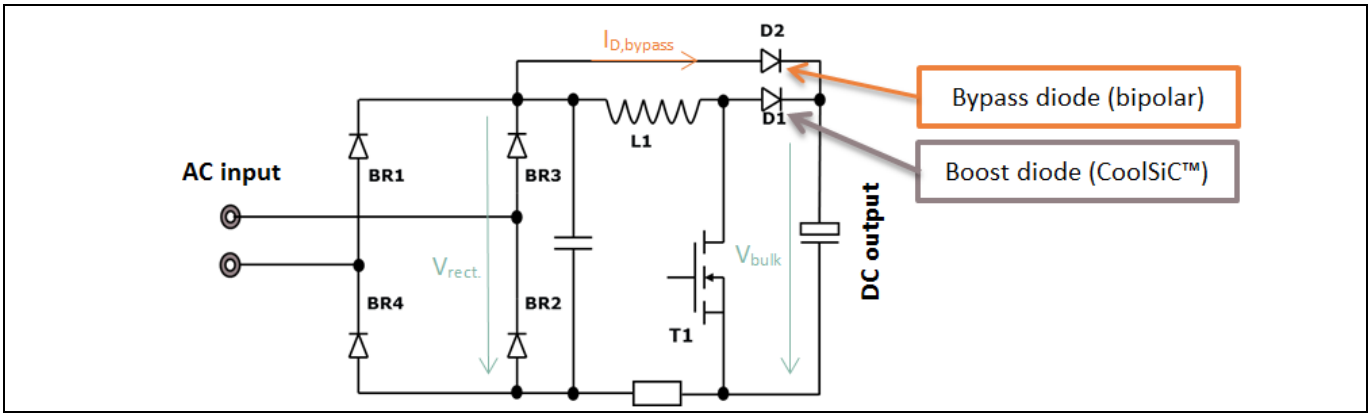

Figure 9 Simplified circuit of a classic PFC

Table 9 shows the datasheet parameters for the CoolSiC™ G6 and G5. Diodes in the 800 W PFC board were tested in order to compare both generations with respect to surge current immunity. The same study included a functionality test of the bypass diode. In the 800 W PFC board, the fast switching diode (1N4448WS-7-F) is used for the bypass diode.

Two surge immunity tests were executed: one with the bypass diode, and the other without the bypass diode.

Table 9 Datasheet values for devices under test

DUT	V_F, at 25°C	I_F, at 25°C	$I_{F,max}$ [A]	$\int i^2t$ [B]	Package	Family
IDH06G65C6	1.25 V	6 A	410 A	7.2 A^2s	PG-TO220-2	CoolSiC™ Schottky diode 650 V G6
IDH06G65C5	1.5 V	6 A	291 A	14 A^2s	PG-TO220-2	CoolSiC™ Schottky diode 650 V G5

The comparison between the CoolSiC™ G6 and G5 shows the diode technology's impact on surge current immunity. The sixth generation has an advantage over the previous generation at non-repetitive peak forward current ($I_{F,max}$) with a pulse length of 10 µs. When the current with 10 ms pulse length is applied, the fifth generation shows better results instead.

Note: In datasheets, the given i^2t values are calculated by the following equation, where $I_{F,SM}$ is surge non-repetitive forward current and t_p is the pulse length.

$$\int_0^{t_P} I(t)^2 dt = I_{F,SM}^2 \int_0^{t_P} sin^2\, t = \frac{1}{2} I_{F,SM}^2 t_P$$

[A] Non-repetitive peak forward current at case temperature T_c = 25°C and pulse length t_p = 10 µs

[B] i^2t value calculated from surge non-repetitive forward current under test conditions: T_c = 25°C, t_p = 10 ms

5.1 Surge immunity test using the bypass diode

The first test had the original set-up of the 800 W PFC evaluation board and it was performed with the bypass diode implemented. In order to simulate the worst possible surge current conditions, the following test set-up was selected:

- Input voltage: V_{in} = 90 V AC
- Switching frequency: f_{sw} = 130 kHz
- Output power: P_{out} = 800 W
- Surge pulse: V_{surge} = 4 kV, Z = 2 Ω, φ = 90°, L-N configuration

The surge immunity test was carried out at 90° (i.e. positive voltage pulse added on top of the sine wave). Specifically, a combination wave test using an impulse voltage wave of 1.2/50 µs with a 4 kV peak value was selected. The test is defined by the standard IEC 61000-4-5, which applies to telecom requirements.

This study includes the worst possible conditions in the PFC circuit with respect to surge immunity. When the input voltage is lowest, the highest current enters the circuit. At this operation point, the highest current flows through the PFC choke, saturating it. This saturation leads to a reduction of the inductance and a decrease in the choke features. The saturated choke cannot contribute much in limiting the surge current pulse when the surge happens. This leads to higher stress on the boost diode, while more surge current is routed through it instead of being routed via the bypass diode. In this precise scenario, the boost diode experiences the highest stress (the highest current flows via the boost diode).

Figures 10 and 11 show two screenshots of current waveforms, captured on the boost and bypass diodes. The boost diode is indicated by the blue waveform and the bypass by green. In Figure 10, the waveforms using the CoolSiC™ G6 as a boost diode are presented. In Figure 11, the G5 result is exemplified.

Waveforms in Figure 10 show:

- Bulk voltage, 200 V/div (magenta)
- Input voltage, 300 V/div (yellow)
- Boost diode current, 5 A/div (light blue)
- Bypass diode current, 70 A/div (green)

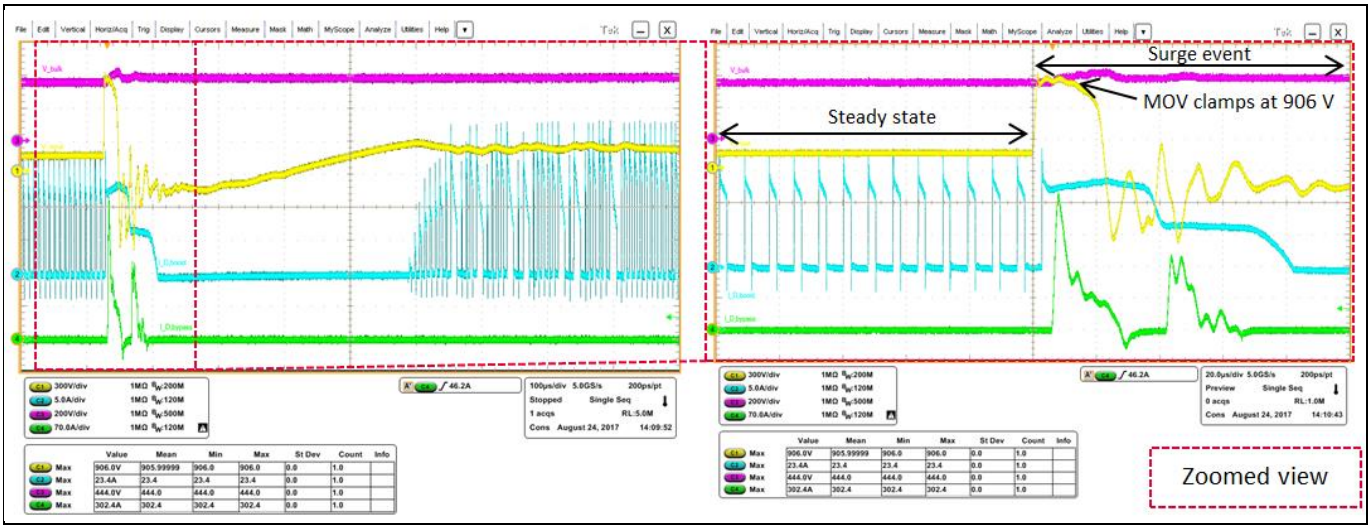

Figure 10 Current signal measured through the boost (IDH06G65C6) and bypass diodes at V_{in} = 90 V AC, f_{sw} = 130 kHz and P_{out} = 800 W (left side normal view and right side the section zoomed view)

Waveforms in Figure 11 show:

- Bulk voltage, 200 V/div (magenta)
- Input voltage, 300 V/div (yellow)
- Boost diode current, 5 A/div (light blue)
- Bypass diode current, 70 A/div (green)

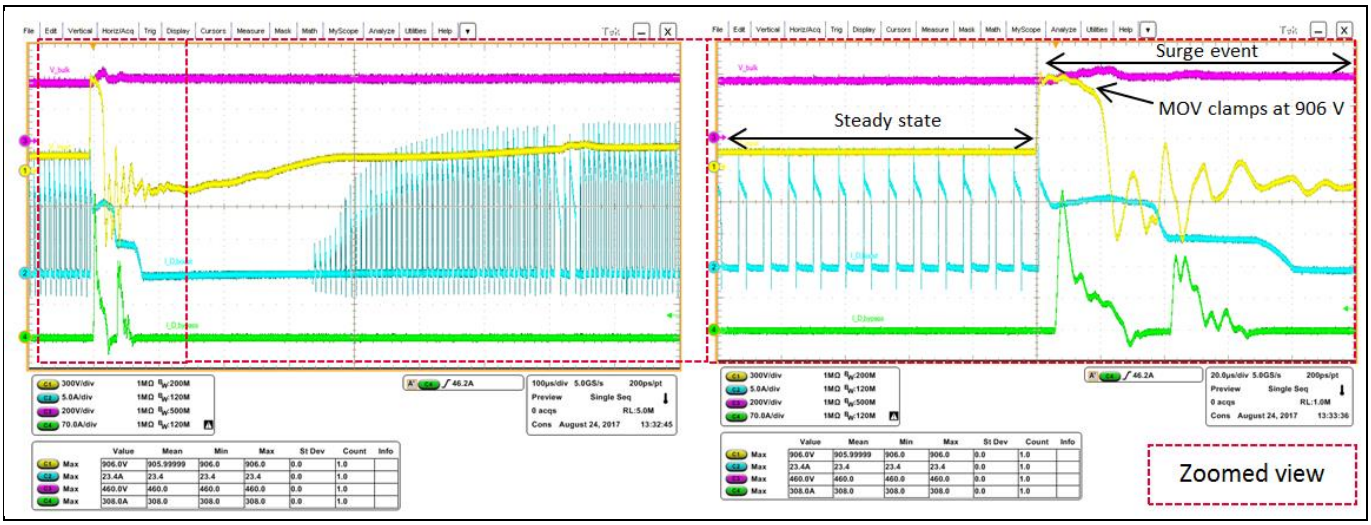

Figure 11 Current signal measured through the boost (IDH06G65C5) and bypass diodes at V_{in} = 90 V AC, f_{sw} = 130 kHz and P_{out} = 800 W (left side normal view and right side the section zoomed view)

The captured waveforms show the normal operation mode on the left half of each current signal capture, where the boost diode conducts cyclically and the bypass is in blocking mode. When the surge pulse is applied to the power supply input (800 W PFC), both diodes are conducting simultaneously.

The boost and the bypass diode are conducting for approximately 80 µs at peak current values:

- $I_{F,max}$ = 23.4 A (boost diode), $I_{F,max}$ = 308 A (bypass diode) → using IDH06G65C6
- $I_{F,max}$ = 23.4 A (boost diode), $I_{F,max}$ = 302 A (bypass diode) → using IDH06G65C5

Yellow waveforms show the input voltage, which is rapidly increased at the surge pulse. The 800 W PFC board has MOV (metal oxide varistor), which clamps high voltage during the surge pulse. This MOV impacts on the current waveforms of the bypass diode current. The first pulse comes at the point when the surge pulse is applied. The second pulse is secondary effect of the MOV. When the MOV is clamping, rectified voltage is decreased and the bypass diode stops conducting. When MOV releases, the voltage increases and generates the second pulse through the bypass diode. Smoother current flows through the boost diode since the PFC choke is limiting fast transients.

According to the surge immunity test, both diodes (CoolSiC™ G6 and G5) show the same performance.

5.2 Surge immunity test without bypass diode

The second scenario considered the surge immunity test without the bypass diode in the circuit. The bypass diode was de-soldered from the 800 W PFC board. The same test conditions as in 5.1 were applied for comparable conditions. The waveform in Figure 12 shows the scenario where all features of the bypass diode were completely disabled.

Waveforms in Figure 12 show:

- Input voltage, 300 V/div (yellow)
- Boost diode current, 5 A/div (light blue)
- Voltage after bridge rectifier, 200 V/div (green)

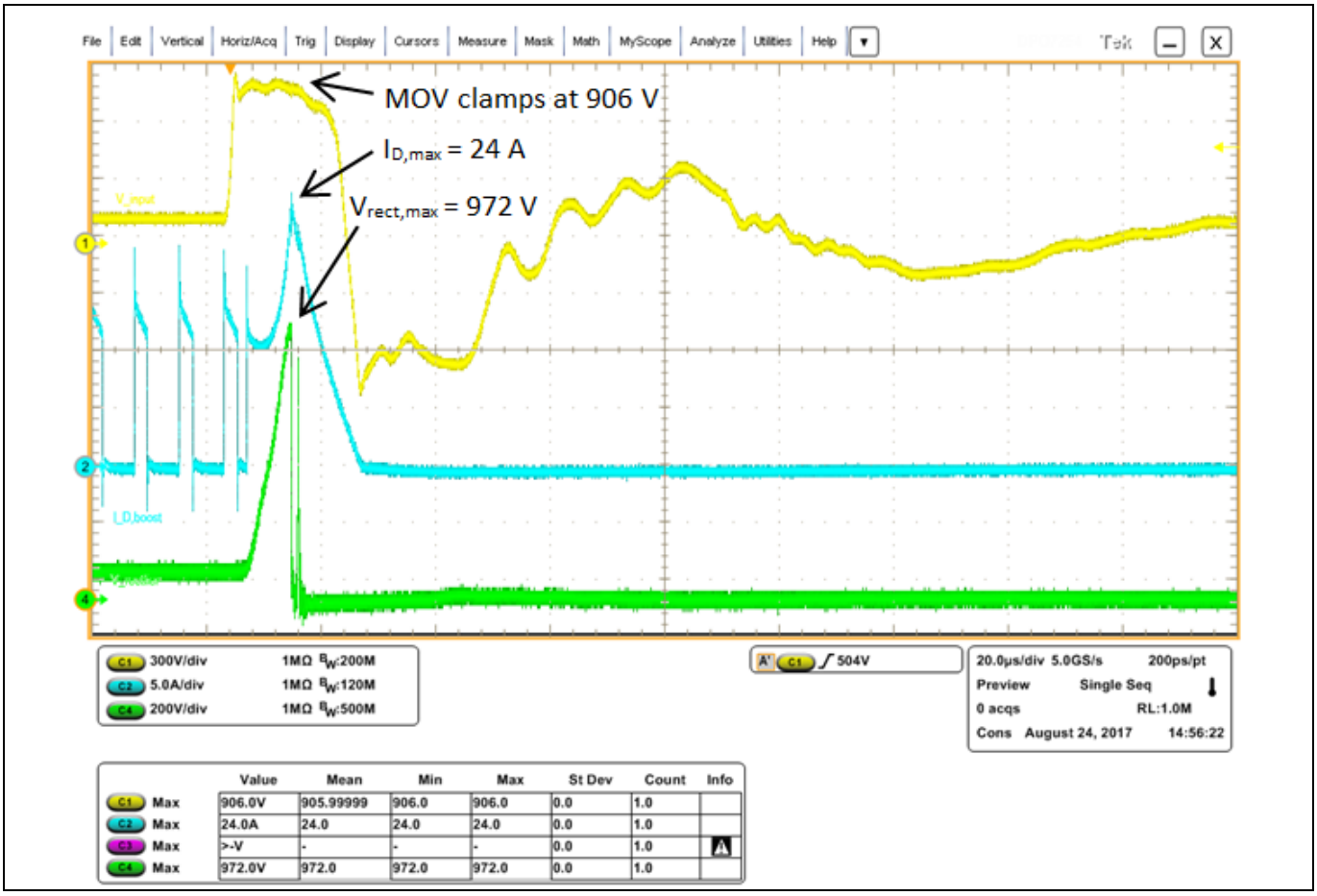

Figure 12 Current signal measured through the boost diode at V_{in} = 90 V AC, f_{sw} = 130 kHz and P_{out} = 800 W (scenario without bypass diode)

When surge pulse passes the circuit, the current through the diode increases to 24 A. This current value is still within the specification of the surge non-repetitive peak forward current given in the datasheet.

The boost diode (IDH06G65C6) survived the test, but the PFC board failured (bridge rectifier failed). The CoolSiC™ G6 diode is not limiting the surge immunity of the PFC stage, even if no bypass diode is used.

6 Conclusion

Infineon's SiC Schottky diode evolution aims to increase efficiency while reducing cost. This study proves that the lower forward voltage of the Schottky diode is a key parameter with respect to achieving high-efficiency and consequently high-density PFC designs.

The lower forward voltage of the CoolSiC™ Schottky diode 650 V G6 enables lower conduction losses, which contribute to achieving:

- Higher efficiency
- Lower junction temperature of the device

The Schottky diode enables shaping the efficiency curve with selection of the proper diode current rating. The power supply designer can therefore optimize cost and efficiency according to the application requirements by choosing the correct diode, and the right current rating. The CoolSiC™ Schottky diode 650 V G6 range offers good granularity in order to achieve the best fit according to optimization goals and design requirements.

Thermal analysis gave better results for the CoolSiC™ Schottky diode 650 V G6 thanks to lower forward voltage drop V_F, and consequently lower conduction losses. Although the CoolSiC™ G6 has increased thermal resistance R_{th}, the sixth generation remains cooler than the previous generation thanks to lower conduction losses.

CoolSiC™ G6 withstands the surge immunity test without any issues. The comparison between designs with and without bypass indicates the clear benefit of the bypass diode. It fully protects the PFC circuit against high surge current, and does not generate any additional power losses under steady-state conditions because it conducts only when the voltage on the anode is higher than on the cathode. Therefore, it is a safety component which conducts only rarely, under conditions such as surge current. Infineon's power supply experts recommend using a bypass diode in PFC topologies.

7 Revision history

Document version	Date of release	Description of changes

Trademarks
All referenced product or service names and trademarks are the property of their respective owners.

Edition 2017-09-01

Published by

Infineon Technologies AG

81726 Munich, Germany

© 2017 Infineon Technologies AG. All Rights Reserved.

Do you have a question about this document?

Email: erratum@infineon.com

Document reference
AN_201704_PL52_020

IMPORTANT NOTICE

The information contained in this application note is given as a hint for the implementation of the product only and shall in no event be regarded as a description or warranty of a certain functionality, condition or quality of the product. Before implementation of the product, the recipient of this application note must verify any function and other technical information given herein in the real application. Infineon Technologies hereby disclaims any and all warranties and liabilities of any kind (including without limitation warranties of non-infringement of intellectual property rights of any third party) with respect to any and all information given in this application note.

The data contained in this document is exclusively intended for technically trained staff. It is the responsibility of customer's technical departments to evaluate the suitability of the product for the intended application and the completeness of the product information given in this document with respect to such application.

For further information on the product, technology, delivery terms and conditions and prices please contact your nearest Infineon Technologies office (**www.infineon.com**).

WARNINGS

Due to technical requirements products may contain dangerous substances. For information on the types in question please contact your nearest Infineon Technologies office.

Except as otherwise explicitly approved by Infineon Technologies in a written document signed by authorized representatives of Infineon Technologies, Infineon Technologies' products may not be used in any applications where a failure of the product or any consequences of the use thereof can reasonably be expected to result in personal injury.