ICL8150 Evaluation system

Boards, tools, and features

About this document

Scope and purpose

This document is a detailed guide to using the Infineon ICL8105 universal evaluation board. It presents the features of the board and describes the configurable options.

The Infineon ICL8105 is a controller for high-performance single-stage digital flyback AC-DC converters for LED lighting applications.

Intended audience

This document is intended for anyone wishing to evaluate the performance of the Infineon ICL8105 for their own application tests or to use it as a base/reference for a new Infineon ICL8105-based development.

Table of contents

About this document **1**
Table of contents **1**
1 Introduction **3**
1.1 Features 3
1.2 Application 3
1.3 Product brief 4
1.4 Safety precautions 4
2 Hardware Information **5**
2.1 Schematic 5
2.2 General notes 7
2.3 Selection of line filters 8
2.4 Input capacitance selection 9
2.5 Outout capacitance selection 9
2.6 Option for different power applications 10
2.7 Output voltage range selection 11
2.8 Synchronous rectification option 12
2.9 Output bleeder selection 12
2.10 Isolated 0 -10 V dimming circuit 13
2.11 Jumper selection guide 14
2.12 PCB layout 16
3 Protection features **18**
3.1 Undervoltage lockout for V_{CC} 19
3.2 Overvoltage protection for V_{CC} 19
3.3 Overvoltage/undervoltage protection for output voltage 19
3.4 Overvoltage/undervoltage protection for input voltage 19
3.5 Input overcurrent detection level 1 (OCD1) 19
3.6 Input overcurrent detection level 2 (OCD2) 19
3.7 Output overcurrent protections 20

3.8 Overtemperature protection 20
4 Measurement results 21
4.1 Constant current operation 22
4.2 Time-to-light 23
4.3 Power factor 24
4.4 Total harmonic distortion 25
4.5 Output dimming 26
4.6 Efficiency 27
5 BOM 28
5.1 Bill of material 28
5.2 Transformer specifications 38
6 References 41
Revision history 42

1 Introduction

1.1 Features

- Universal AC input from 90 V~ to 305 V~
- DC input option
- Wide output voltage range: 20 V to 100 V
- Output current: 0.1 A to 2.0 A
- Tunable output voltage range: Wide/narrow/fixed
- High efficiency with optional synchronous rectification
- Selectable input and output capacitors
- 0 10 V dimming with isolation support Low standby power < 200 mW
- Power rating option (20 W, 40 W, 60 W, 80 W)
- Various footprint options for MOSFET/diode
- Open load auto discharge
- Configurable parameters, e.g. adjustable voltage and current ranges, protection modes

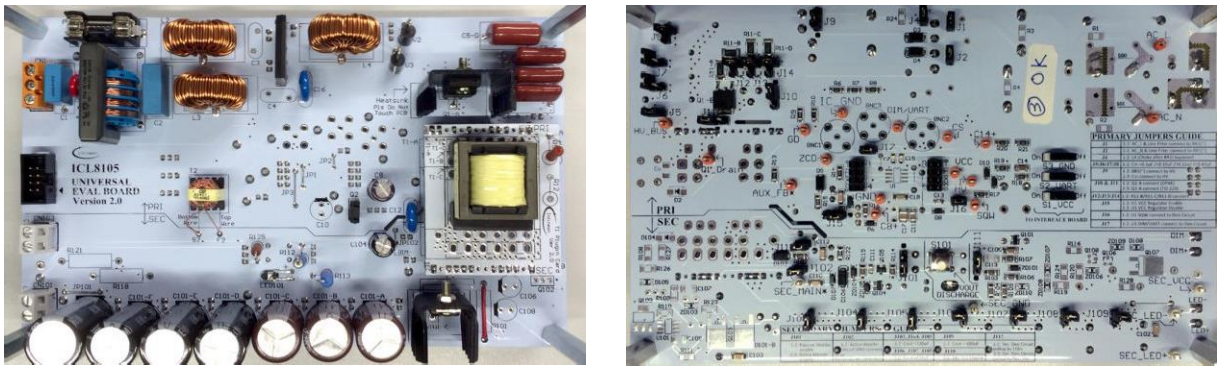


Figure 1 ICL8105 universal evaluation board

1.2 Application

- Electronic control gear for LED luminaires (20 W, 40 W, 60 W, 80 W)

1.3 Product brief

The ICL8105 universal evaluation board is designed to offer designers maximum flexibility in terms of design during the initial design phase. It provides a flexible base for evaluating the performance of the ICL8105. The objective of this board is to allow the designer a faster way to finalize the circuitry and component values before designing the form factor PCB. By default, it is configured as a single-stage PFC flyback topology.

Tuning of power factor (PF), total harmonic distortion (THD) and electromagnetic interference (EMI) is possible with the adjustable input/output capacitance and the option of using different line filters.

The controller provides the ability to use different transformers, allowing easy adaptation for different power applications (20 W, 40 W, 60 W and 80 W). The availability of different footprints of the MOSFET and output diode allows the designer to choose the most cost-effective solution.

The output voltage can be tuned by enabling/disabling the V_{CC} voltage regulator circuitry. Synchronous rectification circuitry is available for selection in the case of high-efficiency applications. Designers can choose to use an active or passive output bleeder to support hot-plug of LEDs and to protect LEDs against overvoltage when being reconnected.

Current (I_{Vcc}, I_{pri}, I_{sec}) can be measured easily across a jumper. Test pins are placed in strategic points for easy hook-up with oscilloscope probes for testing and measurement.

1.4 Safety precautions

Please take note of the following points regarding safety precautions when using the board.

- Any input voltage to the evaluation board should be switched off for at least 30 secs before accessing any circuits/components
- Please check the voltage of output capacitors via S101 and keep pressing for discharge after turning off the board until LED101 light off before changing any jumper configuration of J103 to J109 or assessing any secondary circuits/components
- Please measure by multi-meter and discharge the input capacitors first before changing any jumper configuration of J1 to J11 or assessing any primary circuits/components
- To ensure no electrical shock to the user at all times, please always use an insulated plier/tweezer to change any jumper configurations or assessing any circuits/components

2 Hardware Information

This section provides detailed information on the hardware of the universal evaluation board.

2.1 Schematic

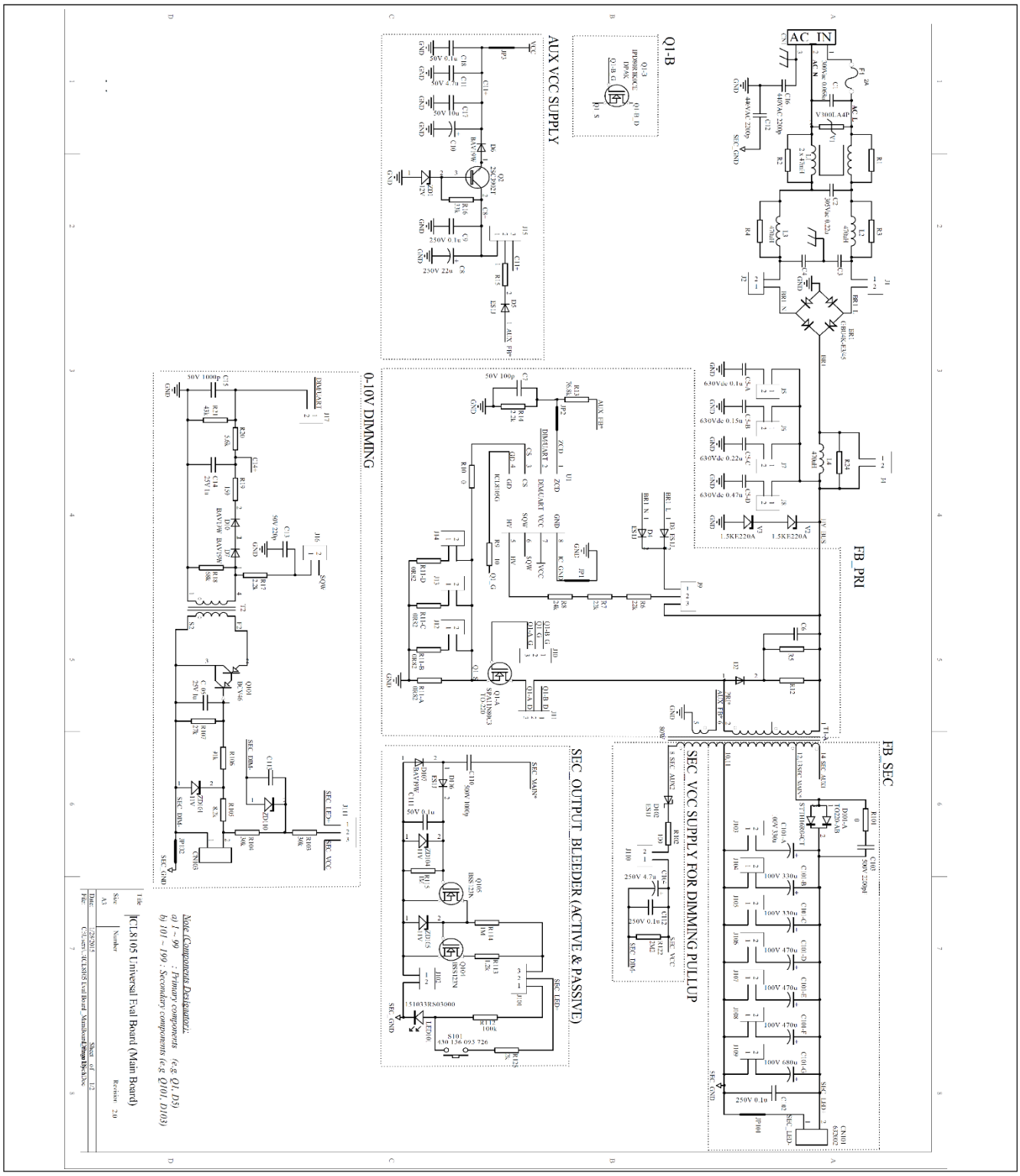


Figure 2 ICL8105 Universal evaluation board (Rev. 2)

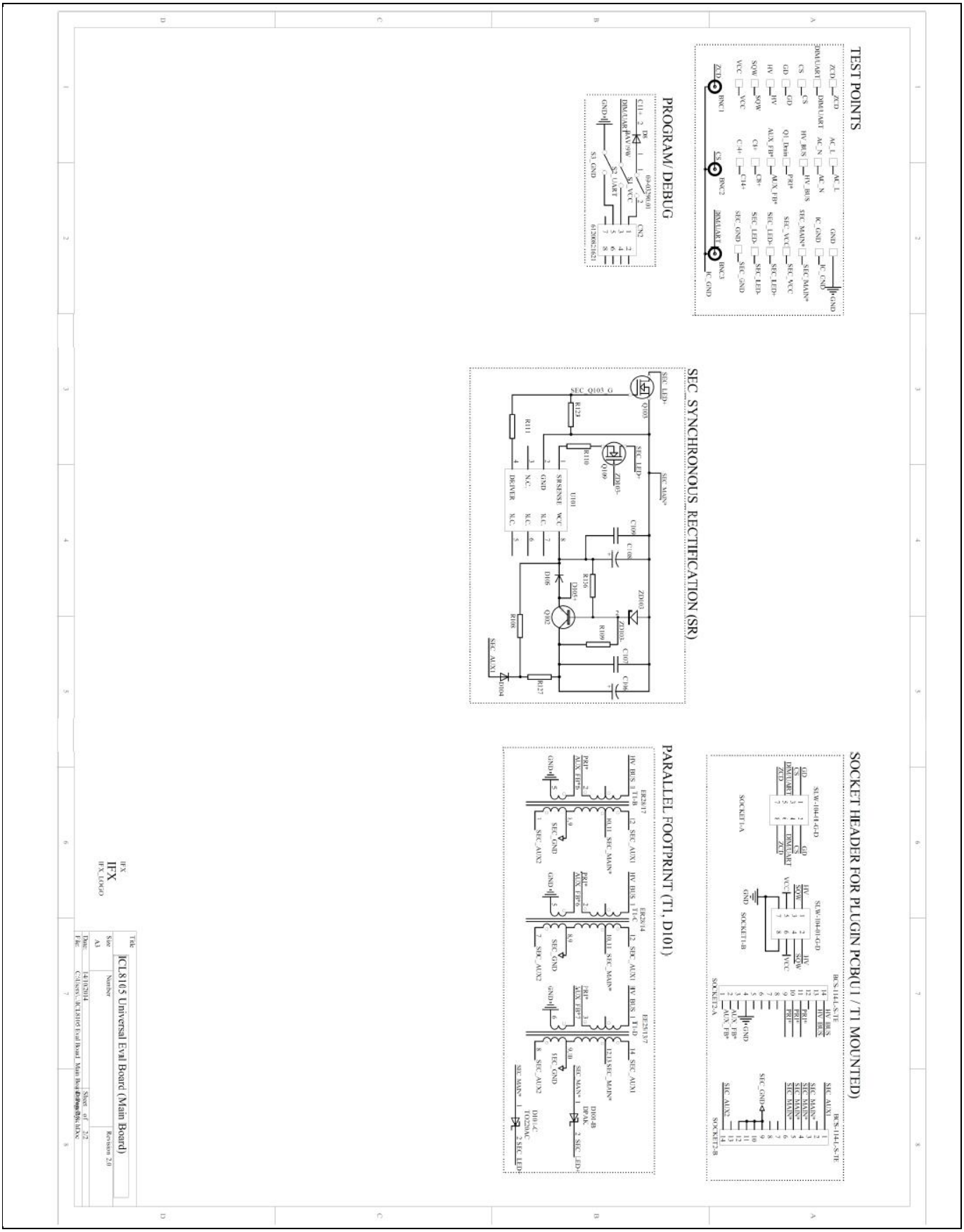


Figure 3 Universal evaluation board (Rev.2)

2.2 General notes

There are many options available to users for selection on this evaluation board. Selection is easily performed by using the appropriate jumper option. There are a total of 27 selectable jumper options. The jumper selection guide to all the jumpers and the function at each position are clearly printed on the PCB bottom.

The ICL8105 chip is soldered onto a small PCB with 2 connectors for connecting to the main board. This is to avoid damage to IC footprints on the main board due to multiple desolder processes during replacement. If designers prefer to solder the chip on the main board, there is also an IC footprint on the main board.



Figure 4 Plugin board with ICL8105 chip

To facilitate debugging and troubleshooting, V_{CC}, Comm (UART) and GND are connected with switches for connection to the interface card.

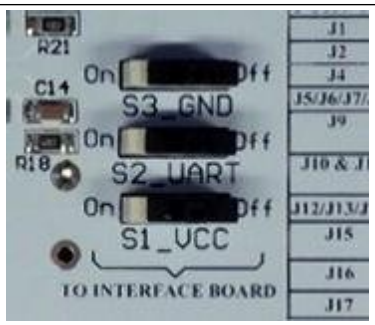


Figure 5 VCC, UART and GND Switches

2.3 Selection of line filters

A line filter is an essential component to achieve good EMI performance. As shown in Figure 5, jumpers J1 and J2 can be opened for connection of an external line filter to the circuit. This allows the designer to use an application-specific line filter to optimize EMI performance. R1/R2 and R3/R4 can also be shorted to disable L1 and L2 respectively. Optionally, C3 and C4 enable further fine-tuning of EMI performance.

Alternatively, designers can open J1 and J2 to disable the filter circuitry and use their own filter circuitry for connection to the board to test EMI performance. Such an option allows designers to re-use the previously designed filter circuitry and thus save time in development.

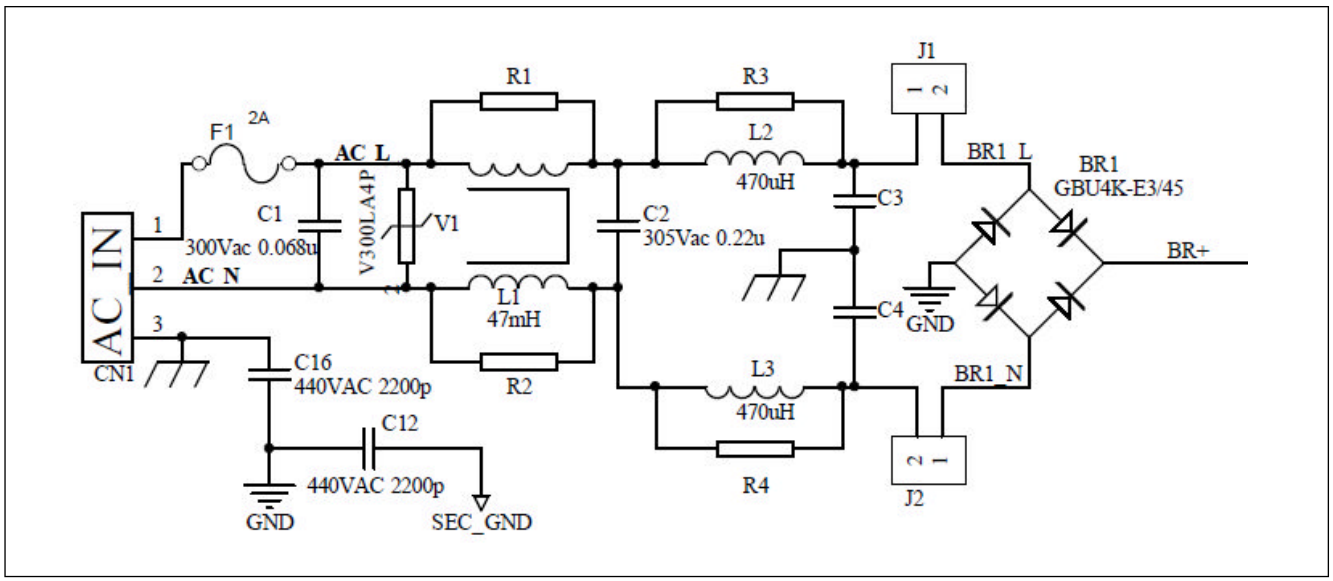


Figure 6 Selection of line filter

2.4 Input capacitance selection

Input capacitance has direct impact on the PF, THD and EMI performance of the system. As shown in **Figure 7**, four capacitors (0.1 µF, 0.15 µF, 0.22 µF and 0.47 µF) are available for selection via the jumpers J5, J6, J7 and J8 respectively. By shorting these jumpers, different combinations of capacitance allow the tuning of PF, THD and EMI. In addition, an “enhanced PFC” feature is available to compensate the input capacitance to optimize the power factor and/or THD.

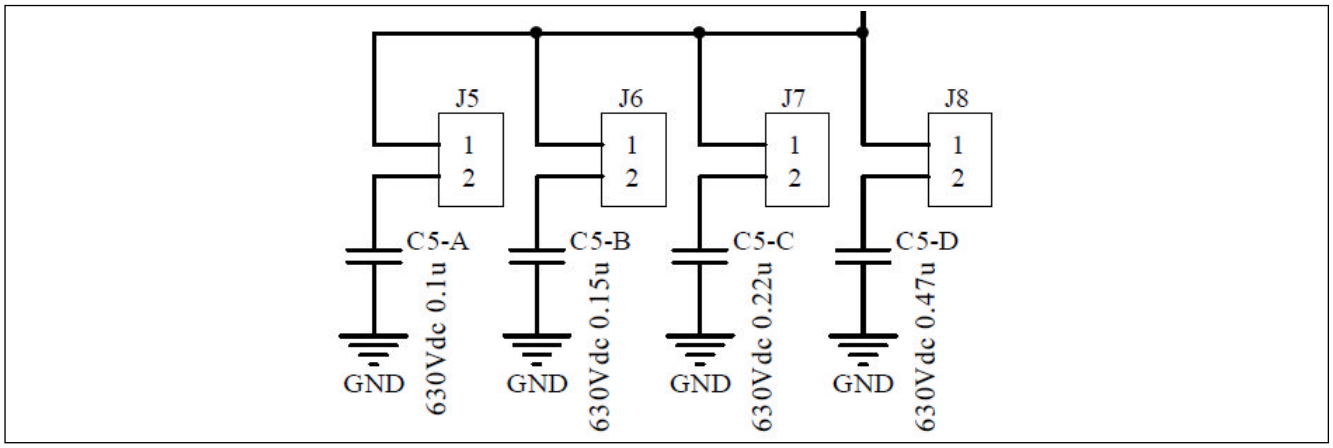


Figure 7 Input capacitance options

2.5 Outout capacitance selection

Output capacitance needs to be selected carefully in order to have the required high output current with low ripple. It represents a trade-off between output ripple and BOM cost that the designer has to choose. As shown in **Figure 8**, seven capacitors (3 X 330 µF, 3 X 470 µF and 1 X 680 µF) are available for selection via jumpers J103 ~ J109. By shorting these jumpers, different combinations of capacitance allow optimization of the output ripple and provide support for high output current /power applications.

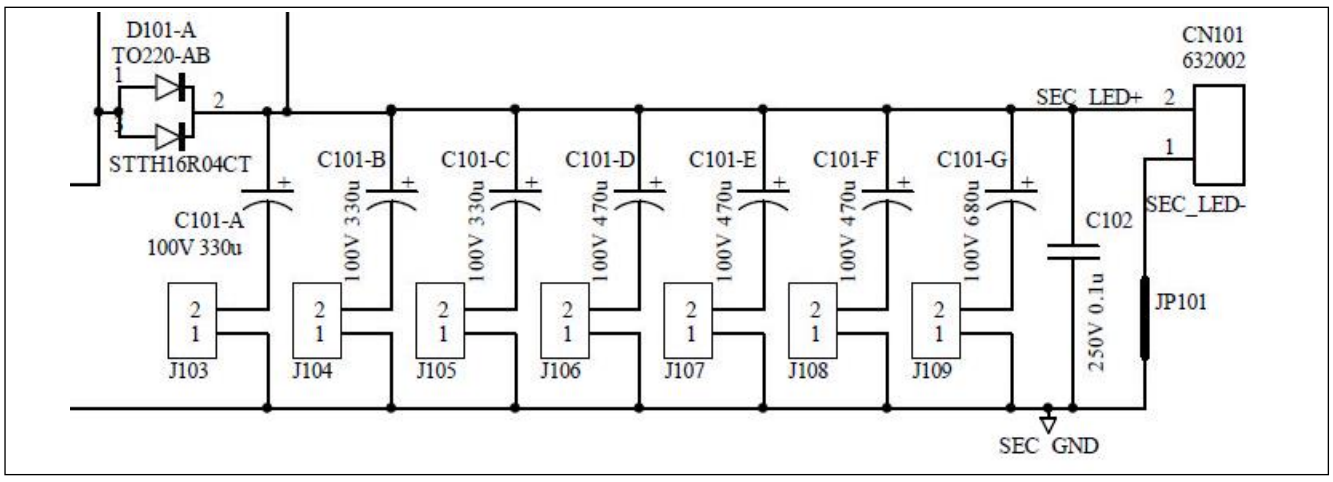


Figure 8 Output capacitance options

2.6 Option for different power applications

This board is designed for use in four different power applications: 20 W, 40 W, 60 W and 80 W. **Figure 9** shows the different footprints available for transformers, MOSFET and output diode; depending on the power and current ratings, the designer can choose the appropriate components for the required power application.

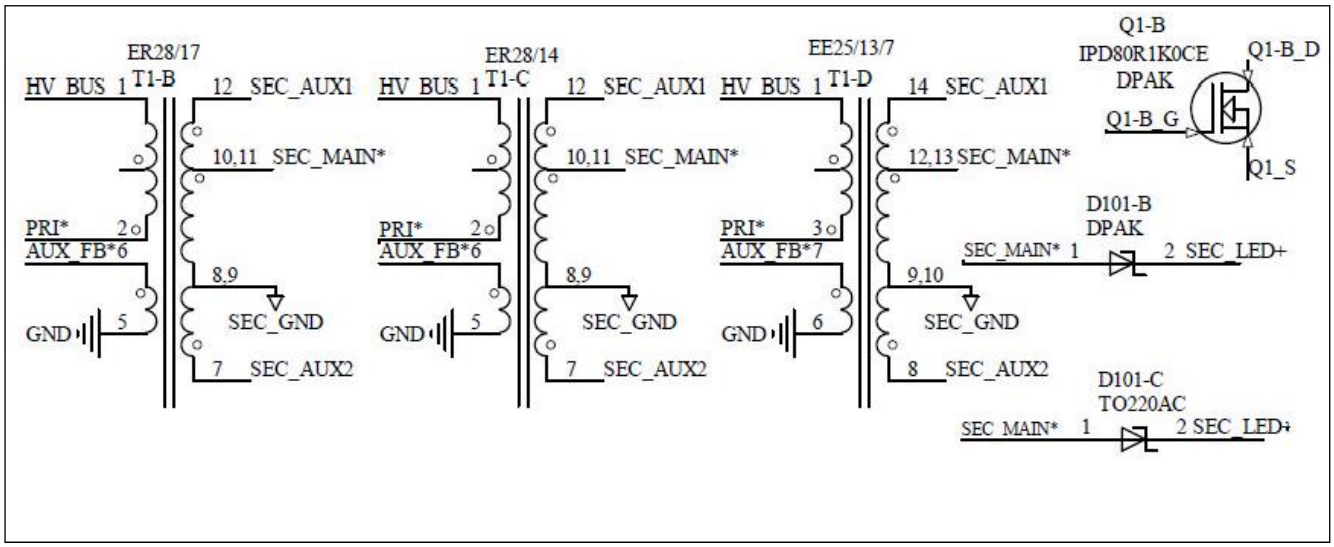


Figure 9 Mutiple footprints

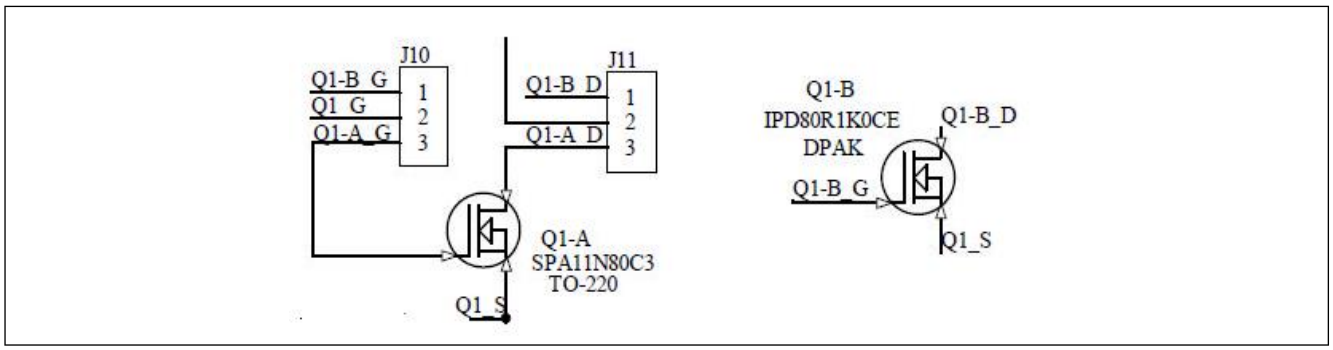


Figure 10 MOSFET

For better efficiency, please note that for the 20 W and 40 W applications, the designer needs to select Q1-B (IPD80R1K0CE) by shorting pins 1 and 2 of both J10 and J11. For the 60 W and 80 W applications, short pins 2 and 3 of J10 and J11 for selection of Q1-A (SPA11N80C3).

2.7 Output voltage range selection

ICL8105 is a constant-current LED driver. As such, the output voltage will vary depending on the number of LEDs connected to it. Note that the transformer winding turn ratio between the output voltage winding and the auxiliary winding that provides the IC V_{CC}, and the output voltage range will affect the V_{CC} circuit design.

Designers have the following choice:

- Fixed output voltage
- Narrow output voltage range (factor of 2, e.g. 12 -24 V)
- Wide output voltage range (factor of 4, e.g. 12 48 V)

Depending on the selection made, the V_{CC} voltage regulator needs to be enabled or disabled via a 3-pin jumper, J15.

- In narrow or fixed output voltage applications, no V_{CC} voltage regulator is required -> short pins 2 3
- For wide output voltage applications, a V_{CC} voltage regulator is required -> short pins 1 2.

And lastly, designers can also externally provide V_{CC} to the ICL8105 at the test point C11+ as the ICL8105 natively supports VCC voltage ranges of about 10 V to 20 V.

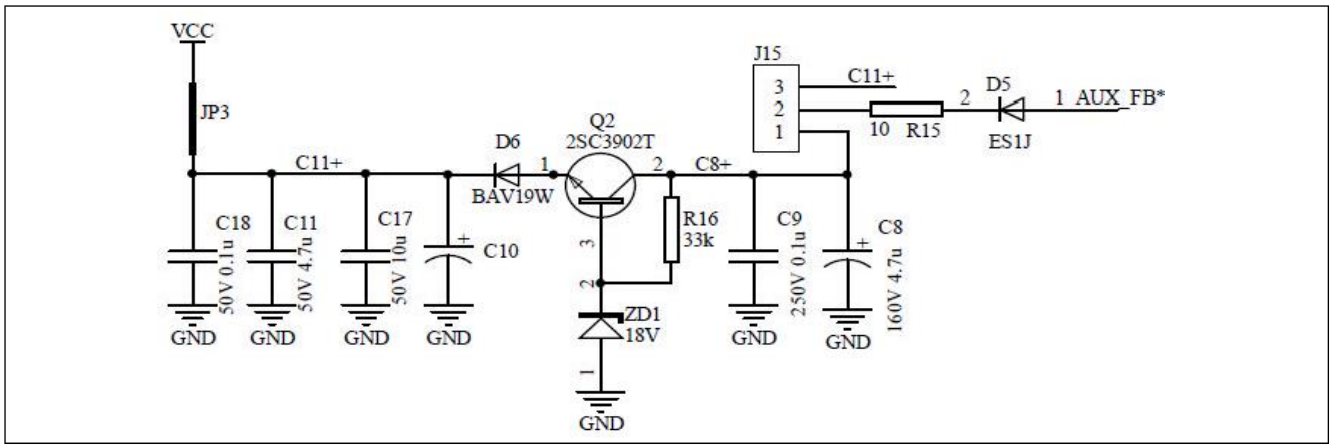


Figure 11 V_{CC} voltage regulator

2.8 Synchronous rectification option

For higher efficiency, the designer may want to try synchronous rectification. Please note that the components footprints of the synchronous rectification circuitry are available on the board. The recommended values of these components are stated in Table 15. Please remember to remove D101 and add the AUX1 winding when using synchronous rectification.

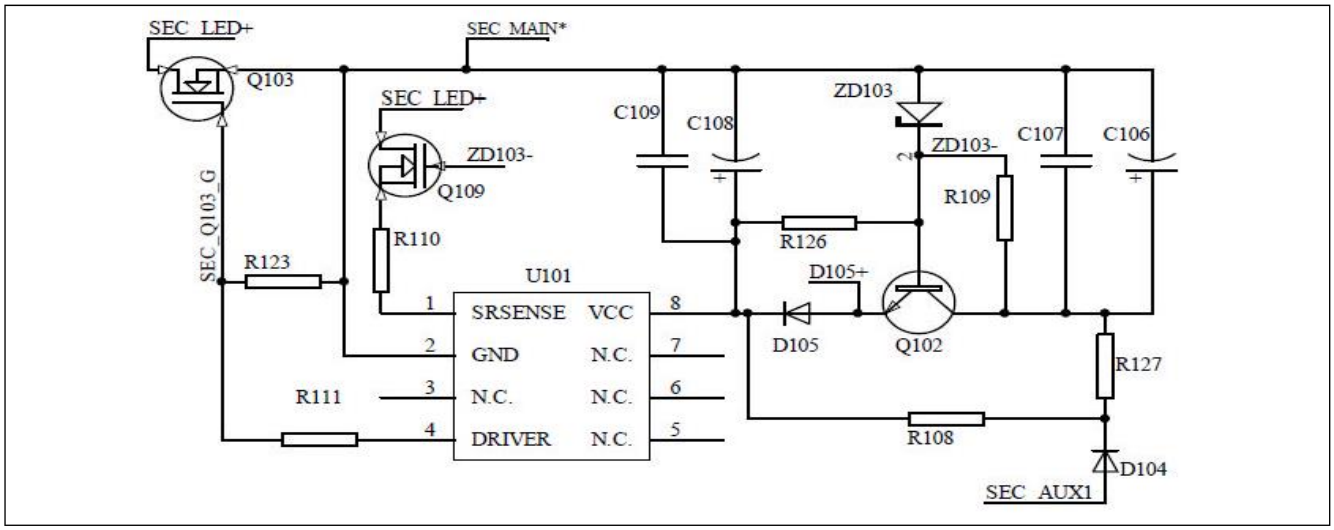


Figure 12 Synchronous rectification

2.9 Output bleeder selection

Output bleeder circuitry is designed in order to discharge the extra electric charge stored in the output capacitor when the LEDs are disconnected. Two types of output bleeder are available for the user to choose. For passive bleeders, short pins 1-2 of J101. For active bleeders, short pins 2-3 of J101 and pins 1-2 of J102.

The disadvantage of passive bleeders is that the design will take a hit in efficiency because the resistor is always on and is bleeding power; to overcome this, a switch is added. The switch must be manually pressed to discharge the extra electric charge. An active bleeder circuit has more components but the resistor to discharge the extra charge is only on when needed and does not require manual switching.

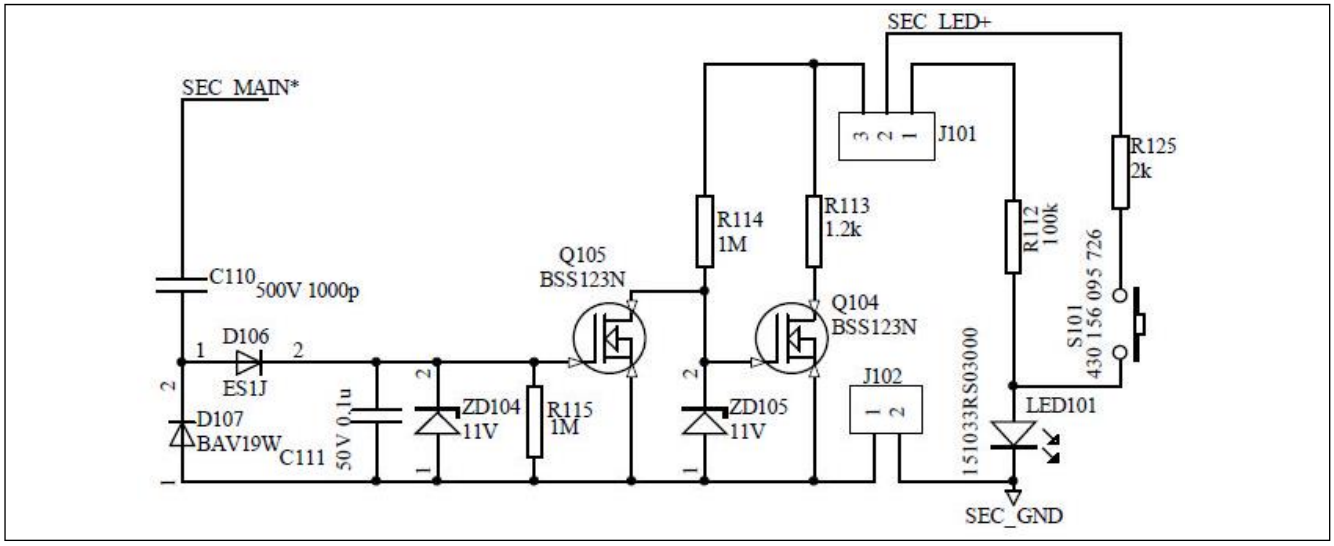


Figure 13 Output bleeder selection

2.10 Isolated 0 -10 V dimming circuit

To enable the 0 10V dimming circuit, short J17 to connect DIM/UART to the circuit and short J16 to connect SQW to the circuit. The designer can choose if the secondary side is to be pulled up by LED+ or Sec VCC by shorting pins 1-2 or pins 2-3 of J111.

The SQW pin generates a square wave signal with a frequency of 15 KHz, amplitude of 7.5 V with a 50% duty cycle. A diode peak detector on the primary side stores this dimming voltage information on the 1nF capacitor for use as a dimming voltage.

If there is a requirement to conform to standard on limits to the current sink into the dimmer, the designer can add C113 and ZD110.

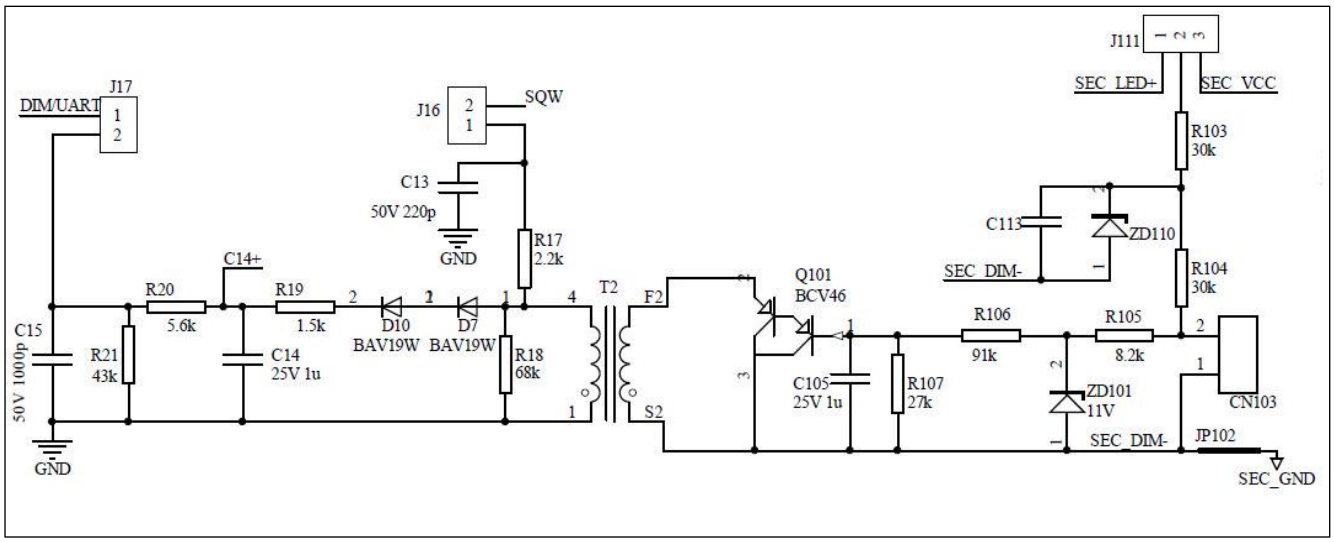


Figure 14 Isolated 0 10 V dimming circuit

If there is a need to use secondary V_{CC} for dimming pull-up, user need to short pin 2-3 of J111 and pin 1-2 of J110.

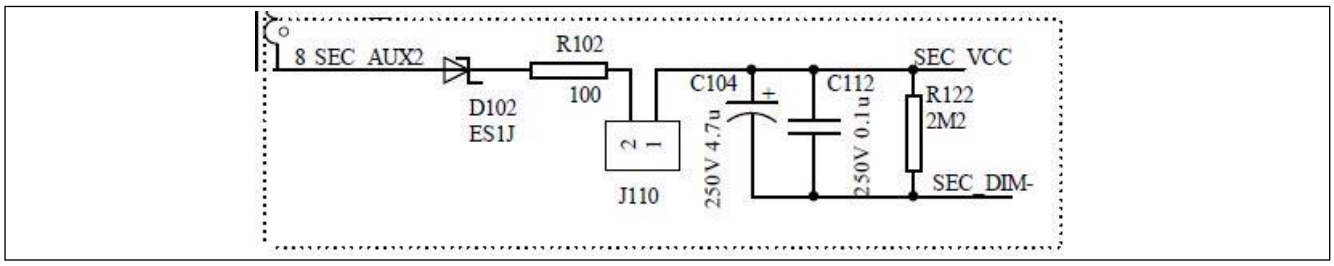


Figure 15 Secondary V_{CC} supply for dimming pull-up

2.11 Jumper selection guide

Table 1 shows the jumper selection options available on the primary side.

Table 1 Jumper selection guide (primary side)

Jumper	Description
J1	Short pins 1-2: AC supply(L) & line filter connected to BR1
J2	Short pins 1-2: AC supply(N) & line filter connected to BR1
J4	Short pins 1-2: to short L4 (differential choke after BR1)
J5	Short pins 1-2: to select additional 0.1 uF
J6	Short pins 1-2: to select additional 0.15 uF
J7	Short pins 1-2: to select additional 0.22 uF
J8	Short pins 1-2: to select additional 0.47 uF
J9	Short pins 1-2: BR1(~) connected to HV Short pins 2-3: Cin connected to HV
J10	Short pins 1-2: Select Q1-B (DPAK) Short pins 2-3: Select Q1-A (TO-220)
J11	Short pins 1-2: Select Q1-B (DPAK) Short pins 2-3: Select Q1-A (TO-220)
J12	Short pins 1-2: Connect R11-B
J13	Short pins 1-2: Connect R11-C
J14	Short pins 1-2: Connect R11-D
J15	Short pins 1-2: U1 V_{CC} regulator enabled Short pins 2-3: U1 V_{CC} regulator disabled
J16	Short pins 1-2: Connect U1 SQW to dimming circuit
J17	Short pins 1-2: Connect U1 DIM/UART to dimming circuit

Table 2 shows the jumper selection options available on the secondary side.

Table 2 Jumper selection guide (secondary side)

Jumper	Description
J101	Short pins 1-2: Enable passive output bleeder Short pins 2-3: Enable active output bleeder
J102	Secondary dimming circuit ground connection For isolation of dimming circuit, open J102
J103	Short pins 1-2: Select additional 330 µF
J104	Short pins 1-2: Select additional 330 µF
J105	Short pins 1-2: Select additional 330 µF
J106	Short pins 1-2: Select additional 470 µF
J107	Short pins 1-2: Select additional 470 µF
J108	Short pins 1-2: Select additional 470 µF
J109	Short pins 1-2: Select additional 680 µF
J110	Short pins 1-2: Enable secondary V_{CC} supply
J111	Short pins 1-2: Secondary dimming circuit pull-up by SEC_LED+ Short pins 2-3: Secondary dimming circuit pull-up by SEC_V_{CC}

2.12 PCB layout

The PCB layout of the evaluation board is shown below.

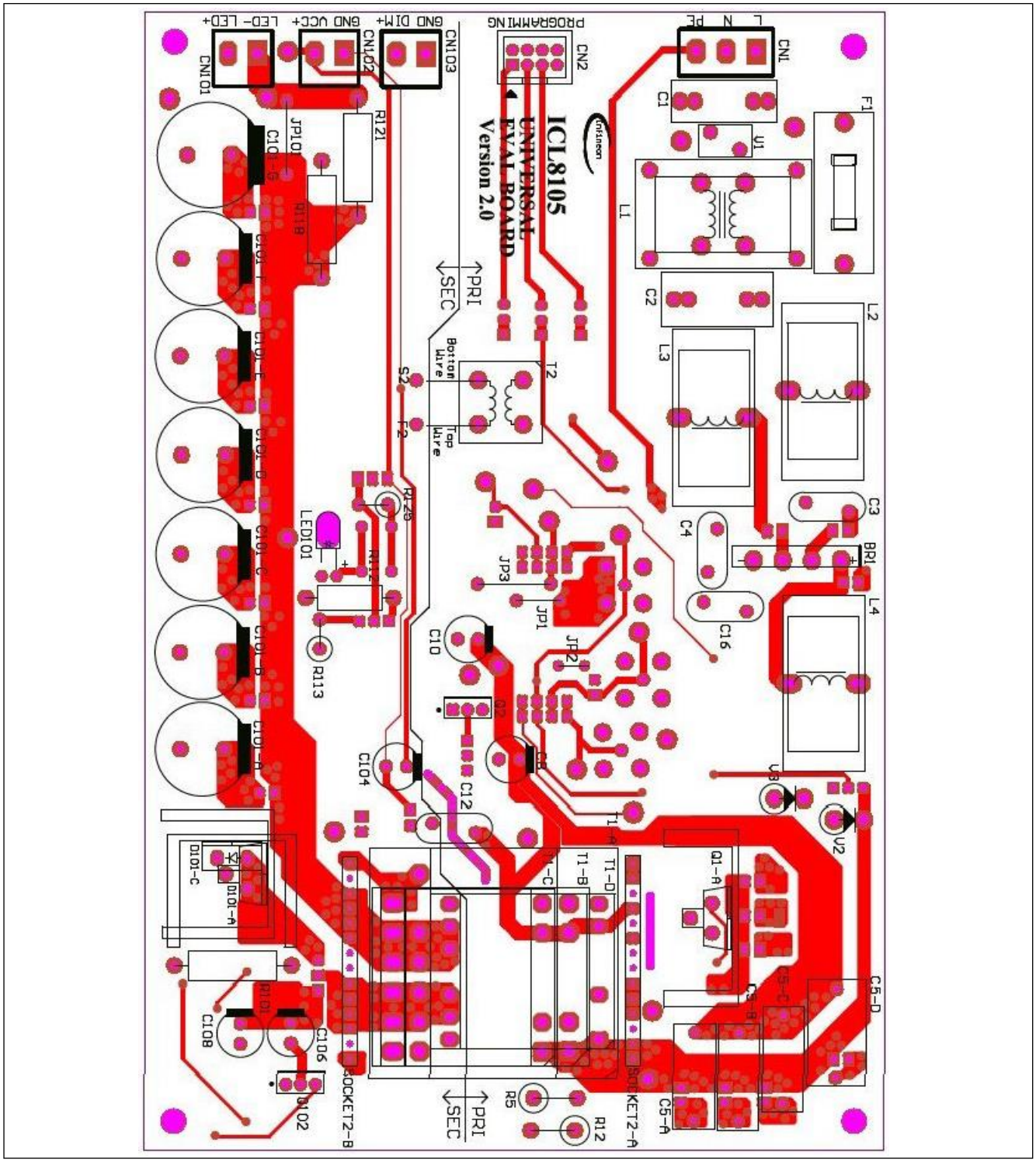


Figure 16 PCB layout: Top view (Rev. 2)

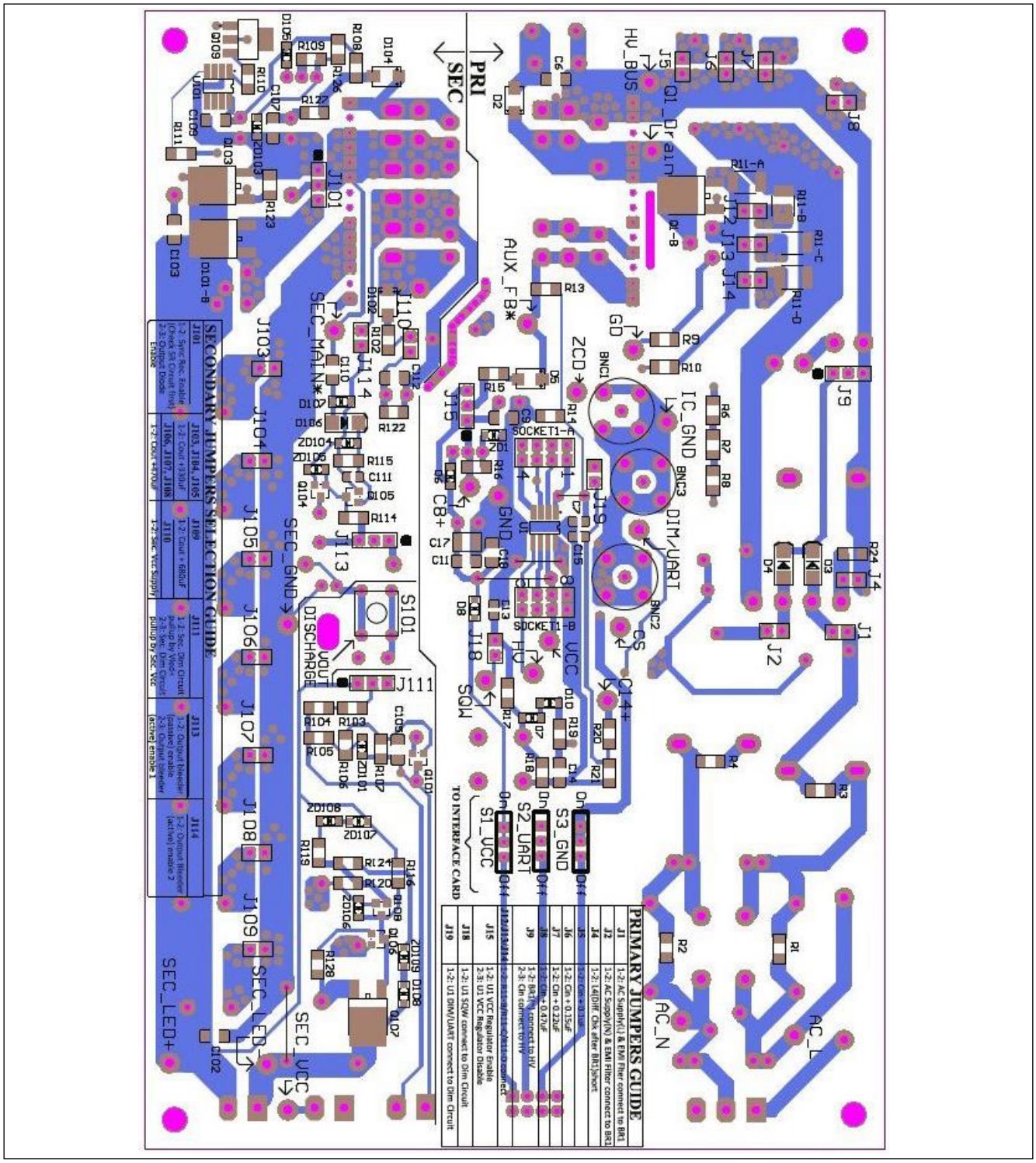


Figure 17 PCB layout: Bottom view (Rev. 2)

3 Protection features

Two reactions to protections (auto restart mode and latch mode) are implemented. Each protection feature has a default reaction.

Auto restart mode

Once the auto restart mode is activated, the IC stops the power MOSFET switching at the pin GD and reduces the current consumption to a minimum. After the configurable auto restart time $t_{auto_restart}$ expires, the IC initiates a new startup.

During this auto restart, the HV startup cell is switched on and off in order to keep the VCC above the UVLO threshold. The auto restart cycle starts first by charging the VCC capacitor by switching on the HV startup cell until the V_{CC} on-threshold is exceeded. An initial startup procedure with soft-start is initiated next.

Latch mode

When latch mode is activated, the power MOSFET switching at the pin GD is immediately stopped. The HV startup cell is switched on and off in order to keep the V_{CC} above the UVLO threshold. The device stays in this state until the input voltage is completely removed and the V_{CC} voltage drops below the UVLO threshold.

The IC can then be restarted by applying input voltage.

Protection feature	Active	Default reaction
Undervoltage lockout for VCC	Always on	Auto Restart
Overvoltage protection for VCC	Always on	Latch mode
Undervoltage protection for Vout	Disabled during startup[1)]	Auto Restart
Overvoltage protection for Vout	Always on[1)]	Latch mode
Undervoltage protection for Vin voltage	Always on[1)]	Auto Restart
Overvoltage protection for Vin voltage	Always on[1)]	Latch mode
Input overcurrent detection level 1	Always on	Current limiting
Input overcurrent protection level 2	Always on	Latch mode
Output current protection (average)	Disabled during startup[1)]	Auto Restart
Output current protection (peak)	Disabled during startup[1)]	Auto Restart
Overtemperature protection	Always on[1)]	Latch mode

1) Configurable

3.1 Undervoltage lockout for V_{CC}

An undervoltage lockout unit (UVLO) is implemented to ensure defined enabling and disabling of the IC operation depending on the supply voltage at the pin V_{CC}. The UVLO contains a hysteresis with the voltage thresholds V_{VCCon} for enabling the IC and V_{VCCoff} for disabling the IC.

Once the mains input voltage is applied, current flows through an external resistor into the pin HV via the integrated diode to the pin V_{CC}. The IC is enabled once V_{CC} exceeds the threshold V_{VCCon} and enters normal operation if no fault condition is detected. In this phase, V_{VCC} will drop until the self-supply via the auxiliary winding takes over the supply at the pin V_{CC}. The self-supply via the auxiliary winding must therefore be in place before V_{VCC} falls below the V_{VCCoff} threshold.

3.2 Overvoltage protection for V_{CC}

Overvoltage detection at the pin V_{CC} is implemented via a configurable threshold V_{VCCOVP}.

3.3 Overvoltage/undervoltage protection for output voltage

An overvoltage/undervoltage detection of the output voltage V_{out} is provided by the measurement and calculation as described in the datasheet. Output/undervoltage protection is disabled during startup. Its detection thresholds $V_{out,OV}$ and $V_{out,UV}$ can be configured.

The startup threshold $V_{out,start}$ has to be configured above the undervoltage threshold to allow for undershooting (especially for resistive loads).

3.4 Overvoltage/undervoltage protection for input voltage

An overvoltage/undervoltage detection of the input voltage V_{in} is provided by the measurement and calculation as described in the datasheet. Peak values of Vin are compared to the configurable internal input overvoltage/undervoltage protection thresholds V_{inOV} and $V_{in,UV}$.

3.5 Input overcurrent detection level 1 (OCD1)

The input overcurrent protection level 1 is implemented by means of the cycle-by-cycle peak current limitation to V_{CSOCD1}. Leading-edge blanking prevents the IC from false switch-off of the power MOSFET due to a leading-edge spike.

3.6 Input overcurrent detection level 2 (OCD2)

The input overcurrent protection level 2 is intended to cover fault conditions, like a short in the transformer primary winding. In this case, overcurrent protection level 1 will not properly limit the peak current due to the very steep slope of the peak current. Once the threshold V_{CSOCP2} is exceeded for longer than t_{CSOCP2}, the protection is triggered.

3.7 Output overcurrent protections

The ICL8105 includes protections for exceeding an average and peak current limit. The average output current is calculated over one half cycle of the input frequency to remove the output current ripple.

3.8 Overtemperature protection

The ICL8105 offers a conventional as well as an adaptive overtemperature protection scheme.

Conventional overtemperature protection

The overtemperature protection initiates a thermal shutdown once the internal temperature detection level T_{OTD} is reached. The IC will turn off and only restart after recycling of the input power, provided the junction temperature is below T_{start}.

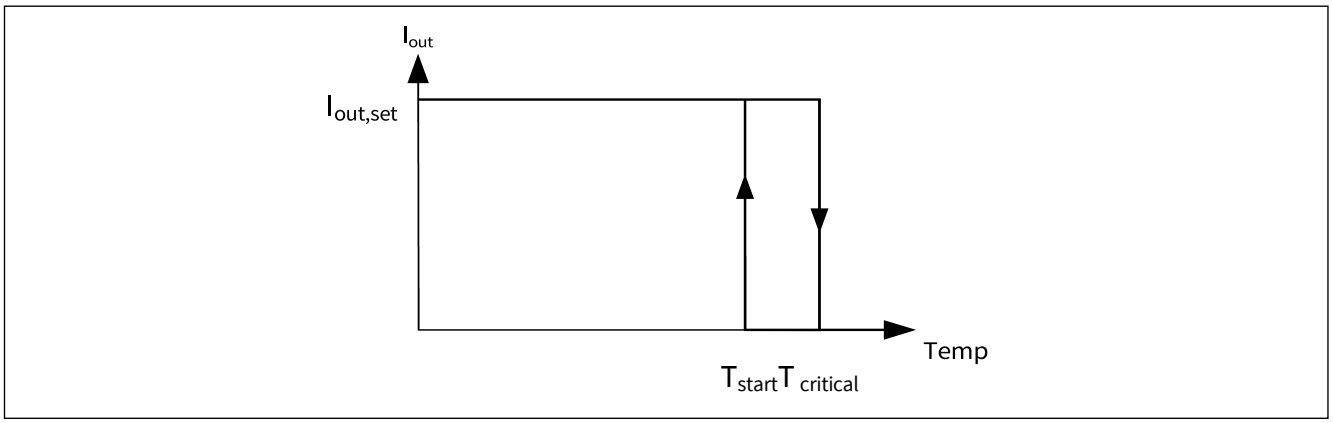


Figure 18 Conventional overtemperature protection

Adaptive temperature protection

To protect the load and driver against overtemperature, the ICL8105 features a reduction of the output current to below the maximum current $I_{out,set}$. As long as the temperature TR is exceeded, the current is gradually reduced as shown in **Figure 19**. If a reduction down to a minimum current $I_{out,red}$ is not able to compensate for the increase of temperature, the ICL8105 will turn off at the temperature T_{OTD}. After turning off, the IC will only restart after recycling of the input power, provided the junction temperature is below T_{start}.

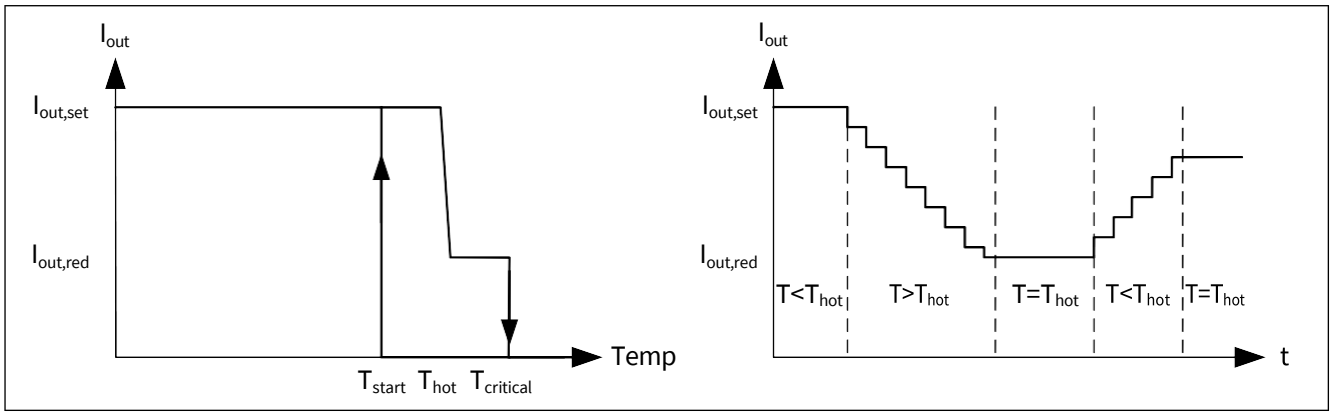


Figure 19 Adaptive temperature protection

4 Measurement results

The measurement results in this chapter were obtained on the evaluation board using a 20 W configuration as described in **Table 3**.

Table 3 Example for a 20 W configuration

Parameter	Value
Output current	400 mA
Input voltage range	Wide: 90 V~ 277 V~
Output voltage range, Vo	Wide: 12 V 48 V
Input capacitance	0.1 µF
Output capacitance	3 X 330 µF
Synchronous rectification	Disabled

4.1 Constant current operation

Figure 20 shows the load (N) and line (Vac) regulation performance of the 20 W ICL8105 evaluation board. A forward voltage of 3 V was used. Thus, the output voltage of approximately 12 V, 30 V, 48 V corresponds to the LED numbers (N) = 4, 10 and 16 respectively in the non-dimmed condition. The output current (Iout) is regulated within a maximum deviation of + 2.75% / - 4.25%.

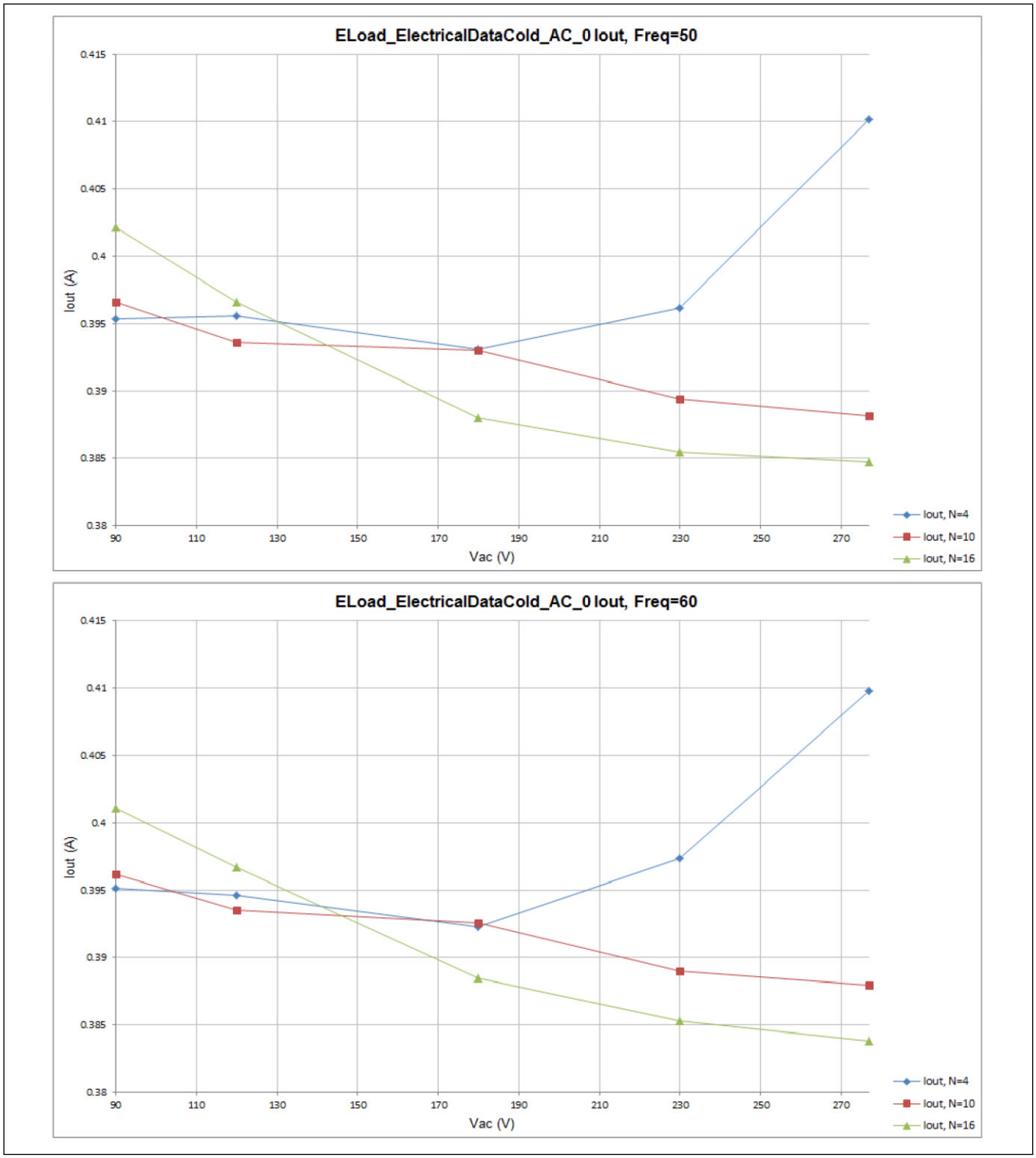


Figure 20 Measured non-dimmed output current (N = 4, 10, 16 corresponds to Vo = 12 V, 30 V, 48 V respectively)

4.2 Time-to-light

Figure 21 shows the time-to-light as measured on the 20 W ICL8105 evaluation board to be < 500 ms. The time-to-light is worst for the lowest input voltage and highest load.

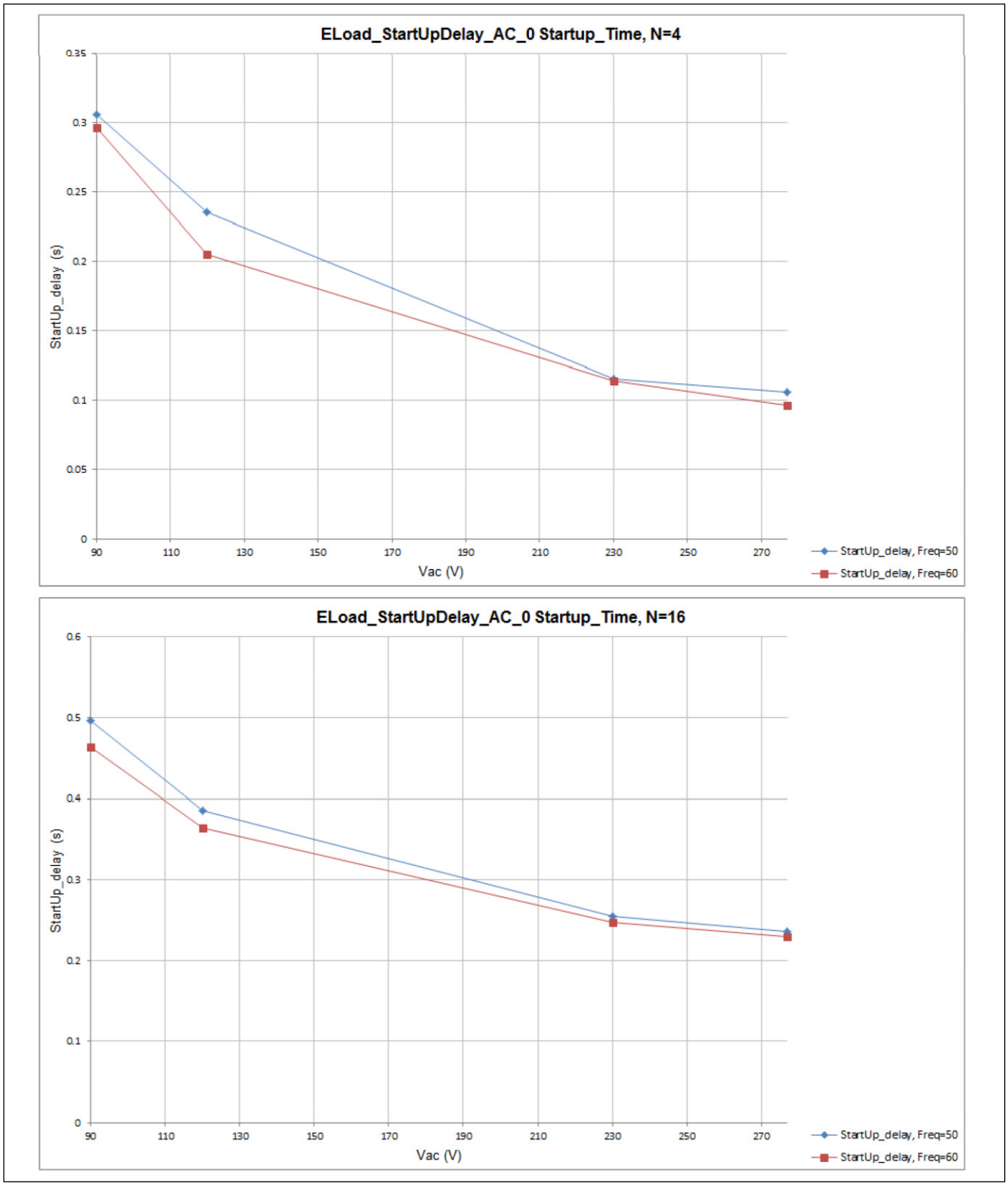


Figure 21 Measured time-to-light

4.3 Power factor

The power factor (PF) of the 20 W ICL8105 evaluation board is > 0.85 for input voltages up to 277 V~ and N >= 10 LEDs.

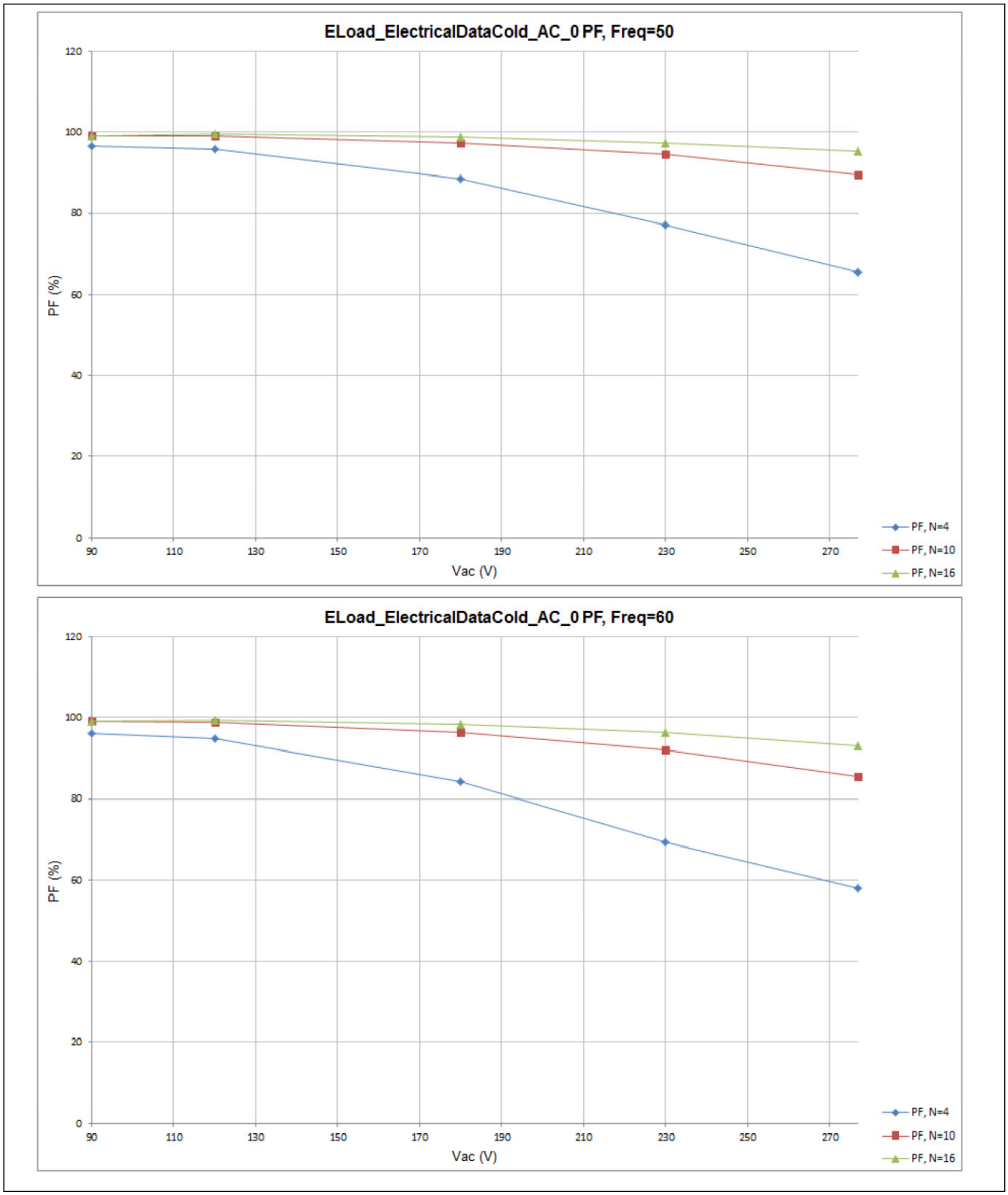


Figure 22 Measured power factor (N = 4, 10, 16 corresponds to Vo = 12 V, 30 V, 48 V respectively)

4.4 Total harmonic distortion

The total harmonic distortion (THD) of the input current on the 20 W ICL8105 evaluation board is < 14% for input voltages up to 277 V~ input voltage and N >= 10 LEDs.

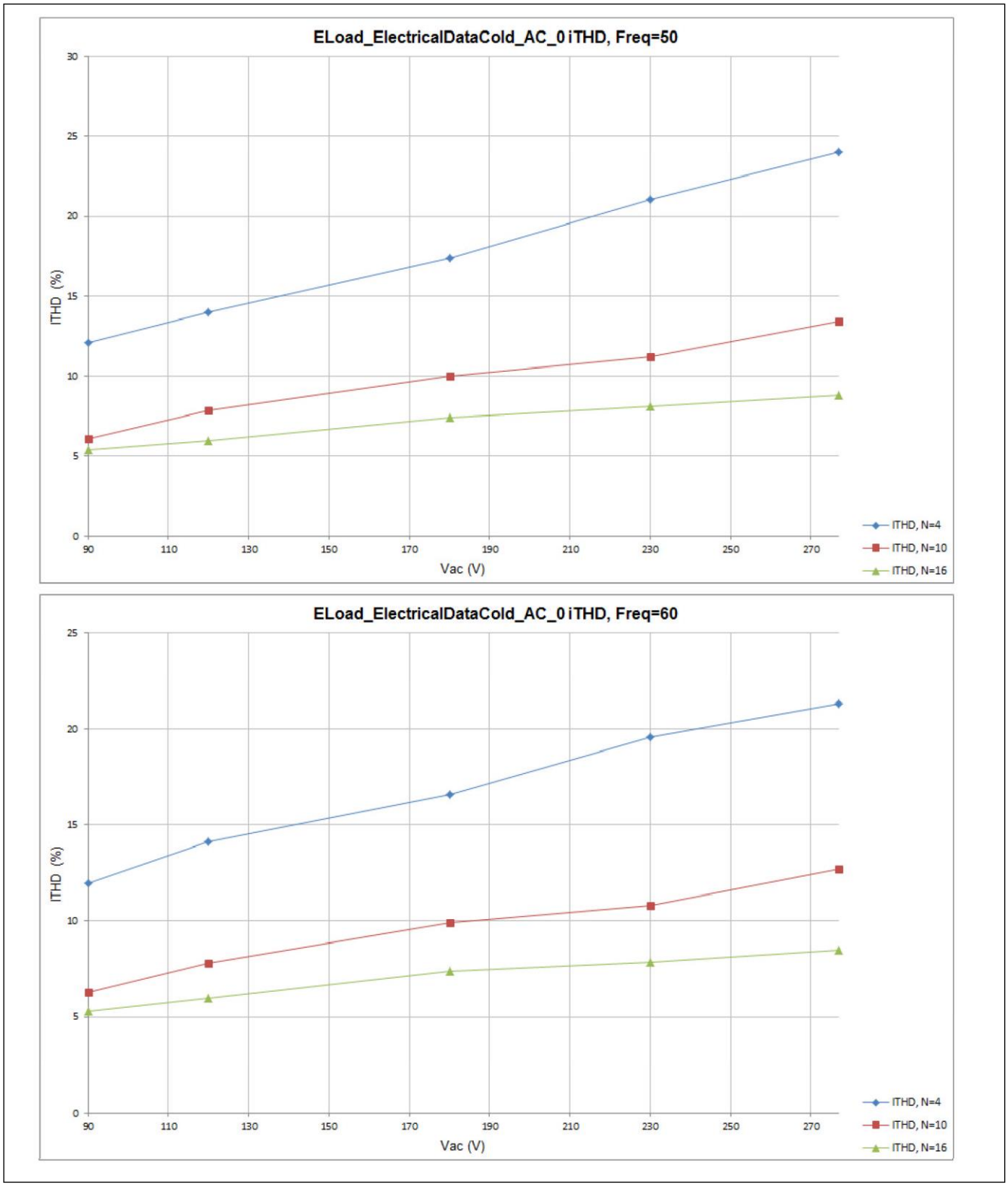


Figure 23 Measured total harmonic distortion (THD) (N = 4, 10, 16 corresponds to Vo = 12 V, 30 V, 48 V respectively)

4.5 Output dimming

The chart below shows the output current of the 20 W ICL8105 evaluation board with respect to the isolated 0 - 10 V dimming voltage. The quadratic dimming curve was selected for this measurement. The difference between the blue and red curves shows the hysteresis of the dim-to-off feature.

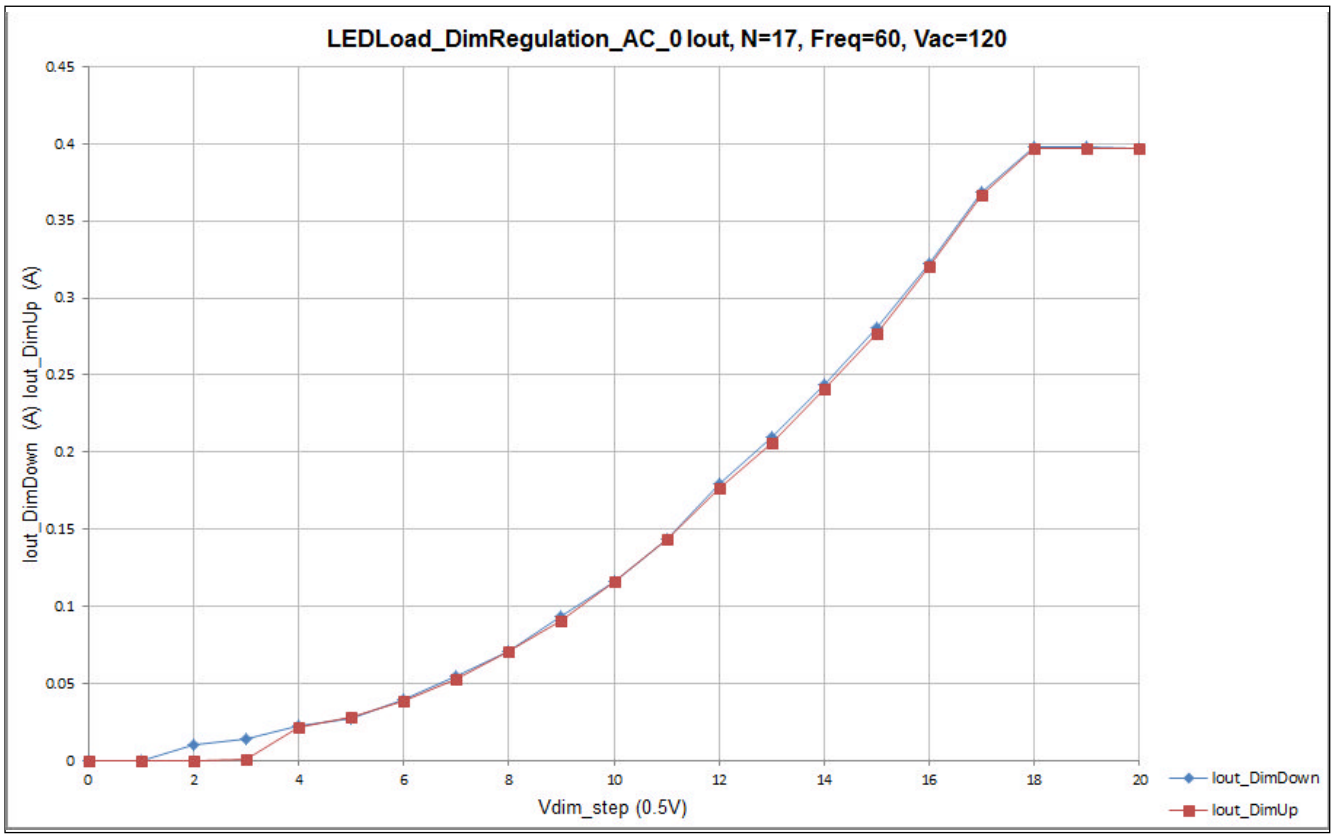


Figure 24 Measured output current for dimmed operation (0 - 10 V dimming input voltage)

4.6 Efficiency

The efficiency of the 20 W ICL8105 evaluation board is > 82% for N >= 10 LEDs across all line voltages. The peak efficiency was measured at 87%.

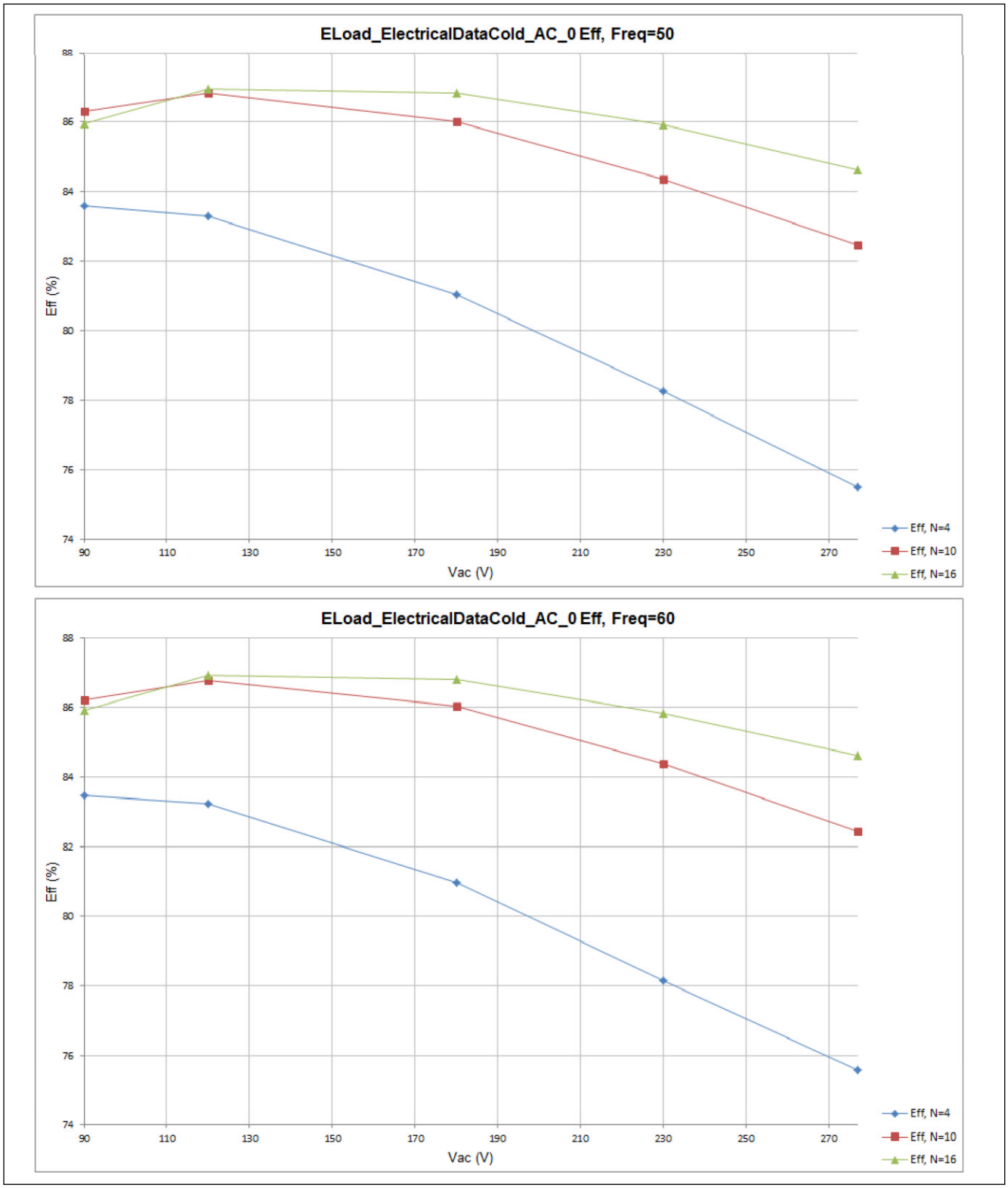


Figure 25 Measured efficiency (N = 4, 10, 16 corresponds to Vo = 12 V, 30 V, 48 V respectively)

5 BOM

5.1 Bill of material

Table 4 Bill-of-materials (INPUT & FILTER)

Designator	Value	Part number	Manuf.	Quantity
BR1	800V 4A	GBU4K-E3/45	VISHAY	1
C1	300Vac 0.068u	PHE840EA5680KA04R17	KEMET	1
C2	305Vac 0.22u	B32922C3224K189	EPCOS	1
C3	NOT MOUNTED	NOT MOUNTED		
C4	NOT MOUNTED	NOT MOUNTED		
C5-A	630V 0.1u	ECW-FA2J104JQ	PANASONIC	1
C5-B	630V 0.15u	ECW-FA2J154JQ	PANASONIC	1
C5-C	630V 0.22u	ECW-FA2J224JQ	PANASONIC	1
C5-D	630V 0.47u	ECW-FA2J474JQ	PANASONIC	1
C12	440Vac 2200p	WKO222MCPCJ0KR	VISHAY	1
C16	440Vac 2200p	WKO222MCPCJ0KR	VISHAY	1
F1	250VAC 2A QUICK BLOW	0217002.TXP	LITTELFUSE	1
FUSE HOLDER	05200101ZXX	05200101ZXX	LITTELFUSE	1
L1	47mH, 1.3A	B82734-R2132-B30	EPCOS	1
L2	470uH, 3A	7447071	WURTH	1
L3	470uH, 3A	7447071	WURTH	1
L4	470uH, 3A	7447071	WURTH	1
R1, R2	NOT MOUNTED	NOT MOUNTED		
R3	NOT MOUNTED	NOT MOUNTED		
R4	NOT MOUNTED	NOT MOUNTED		
R24	NOT MOUNTED	NOT MOUNTED		
V1	V300LA4P	V300LA4P	LITTELFUSE	1
V2, V3	1.5KE220A	1.5KE220A	ST	2

Table 5 Bill-of-materials (FLYBACK PRIMARY)

Designator	Value	Part number	Manuf.	Quantity
C7	50V 100p	08055A101FAT2A	AVX	1
C8	250V 22u	EEUED2E220	PANASONIC	1
C9	250V 0.1u	C3216X7R2E104K160AA	TDK	1
C10	NOT MOUNTED	NOT MOUNTED		
C11	50V 4.7u	12065C475KAT2A	KEMET	1
C17	50V 10u	12105C106KAT2A	AVX	1
C18	50V 0.1u	12065C104KAT2A	AVX	1
D3	600V 1A	ES1J	FAIRCHILD	1
D4	600V 1A	ES1J	FAIRCHILD	1
D5	600V 1A	ES1J	FAIRCHILD	1
D6	100V 0.2A	BAV19W	DIODES INC	1
JP1 , JP2, JP3	WIRE JUMPER			3
Q1-A	SPA17N80C3	SPA17N80C3	INFINEON	1
HEATSINK Q1-A	TV1500	TV1500	AAVID	1
Q1-B	IPD80R1K0CE	IPD80R1K0CE	INFINEON	1
Q2	2SC3902T	2SC3902T	ONSEMI	1
R6	22k ohm Size: SMD 1206, Tolerance:1%	22k ohm Size: SMD 1206, Tolerance:1%	ANY	1
R7	22k ohm Size: SMD 1206, Tolerance:1%	22k ohm Size: SMD 1206, Tolerance:1%	ANY	1
R8	24k ohm Size: SMD 1206, Tolerance:1%	24k ohm Size: SMD 1206, Tolerance:1%	ANY	1
R9	10 ohm Size: SMD 1206, Tolerance:1%	10 ohm Size: SMD 1206, Tolerance:1%	ANY	1
R10	0 ohm Size: SMD 1206, Tolerance:1%	0 ohm Size: SMD 1206, Tolerance:1%	ANY	1
R11-A,	0R82 Ohm Size: SMD 2010, Tolerance:1%	RCWE2010R820FKEA	VISHAY	1
R11-B	0R82 Ohm Size: SMD 2010, Tolerance:1%	RCWE2010R820FKEA	VISHAY	1

R11-C	0R82 Ohm Size: SMD 2010, Tolerance:1%	RCWE2010R820FKEA	VISHAY	1
R11-D	0R82 Ohm Size: SMD 2010, Tolerance:1%	RCWE2010R820FKEA	VISHAY	1
R13	76k8 ohm Size: SMD 1206, Tolerance:1%	76k8 ohm Size: SMD 1206, Tolerance:1%	ANY	1
R14	2K2 ohm Size: SMD 1206, Tolerance:1%	2K2 ohm Size: SMD 1206, Tolerance:1%	ANY	1
R15	1 ohm Size: SMD 1206, Tolerance:1%	1 ohm Size: SMD 1206, Tolerance:1%	ANY	1
R16	33k ohm Size: SMD 1206, Tolerance:1%	33k ohm Size: SMD 1206, Tolerance:1%	ANY	1
ZD1	12V	MMSZ5242BT1G	ONSEMI	1

Table 6 Bill-of-materials (20W TRANSFORMER & SNUBBER)

Designator	Value	Part number	Manuf.	Quantity
SOCKET2-A SOCKET2-B	14 PINS	MC34735	MULTICOMP	2
T1-D	Lp = 1.6mH Np:Ns:Naux:Nsec_aux = 132: 34: 56 :56	750342294 Rev01	MIDCOM	1
C6	630V 2200p	GRM31BR72J222KW01L	MURATA	1
D2	1000V 1A	US1M-E3/5AT	VISHAY	1
R5	820K ohm	PR02000208203JR500	VISHAY	1
R12	NOT MOUNTED	NOT MOUNTED		

Table 7 Bill-of-materials (80W TRANSFORMER & SNUBBER)

Designator	Value	Part number	Manuf.	Quantity
SOCKET2-A SOCKET2-B	14 PINS	MC34735	MULTICOMP	2
T1-A	Lp = 310uH Np:Ns:Naux:Nsec_aux = 54 : 14 : 23 : 23	750342295 Rev07	MIDCOM	1
C6	630V 10000p	GRJ31BR72J103KWJ1L	MURATA	1
D2	1000V 1A	US1M-E3/5AT	VISHAY	1
R5	820K ohm	PR02000208203JR500	VISHAY	1
R12	NOT MOUNTED	NOT MOUNTED		

Table 8 Bill-of-materials (FLYBACK SECONDARY)

Designator	Value	Part number	Manuf.	Quantity
C101-A, C101-B, C101-C	100V 330u	EKY-101ELL331ML25S	CHEMICON	3
C101-D, C101-E, C101-F	100V 470u	UHE2A471MHD	NICHICON	3
C101-G	100V 680u	UHE2A681MHD	NICHICON	1
C102	250V 0.1u	C3216X7R2E104K160AA	TDK	1
C103	500V 2200p	12067C222KAT2A	AVX	1
D101-A	400V 8A x 2	STTH16R04CT	ST	1
HEATSINK D101-A	TV5G	TV5G	AAVID	1
D101-B	NOT MOUNTED	NOT MOUNTED		
D101-C	NOT MOUNTED	NOT MOUNTED		
JP101	WIRE JUMPER			1
R101	INSULATED JUMPER	INSULATED JUMPER		1

Table 9 Bill-of-materials (0 -10V DIMMING)

Designator	Value	Part number	Manuf.	Quantity
C13	50V 220p	C0805C221J5GACAUTO	KEMET	1
C14	25V 1u	C3216X7R1E105K160AA	TDK	1
C15	50V 1000p	C0805C102J5GACTU	KEMET	1
C105	25V 1u	C3216X7R1E105K160AA	TDK	1
D7, D10	100V 0.2A	BAV19W	DIODES INC	2
JP102	WIRE JUMPER			1
Q101	BCV46	BCV46	INFINEON	1
R17	2K2 ohm Size: SMD 1206, Tolerance:1%	2K2 ohm Size: SMD 1206, Tolerance:1%	ANY	1
R18	68k ohm Size: SMD 1206, Tolerance:1%	68k ohm Size: SMD 1206, Tolerance:1%	ANY	1
R19	1K5 ohm Size: SMD 1206, Tolerance:1%	1K5 ohm Size: SMD 1206, Tolerance:1%	ANY	1
R20	5K6 ohm Size: SMD 1206, Tolerance:1%	5K6 ohm Size: SMD 1206, Tolerance:1%	ANY	1
R21	43k ohm Size: SMD 1206, Tolerance:1%	43k ohm Size: SMD 1206, Tolerance:1%	ANY	1
R103	30k ohm Size: SMD 1206, Tolerance:1%	30k ohm Size: SMD 1206, Tolerance:1%	ANY	1
R104	30k ohm Size: SMD 1206, Tolerance:1%	30k ohm Size: SMD 1206, Tolerance:1%	ANY	1
R105	8k2 ohm Size: SMD 1206, Tolerance:1%	8k2 ohm Size: SMD 1206, Tolerance:1%	ANY	1
R106	91k ohm Size: SMD 1206, Tolerance:1%	91k ohm Size: SMD 1206, Tolerance:1%	ANY	1
R107	27k ohm Size: SMD 1206, Tolerance:1%	27k ohm Size: SMD 1206, Tolerance:1%	ANY	1
T2	Lp = 5mH(min), Np:Ns = 1:1	750314131 Rev02	WURTH	1
ZD101	11V	MMSZ5241B-V-GS08	VISHAY	1
C113, ZD110	NOT MOUNTED	NOT MOUNTED		

Table 10 Bill-of-materials (OUTPUT BLEEDER)

Designator	Value	Part number	Manuf.	Quantity
C110	500V 1000p	12067C102KAT2A	AVX	1
C111	50V 0.1u	08055C104JAT2A	AVX	1
D106	600V 1A	ES1J	FAIRCHILD	1
D107	100V 0.2A	BAV19W	DIODES INC	1
LED101	LED	151033RS03000	WURTH	1
Q104	BSS123N	BSS123N	INFINEON	1
Q105	BSS123N	BSS123N	INFINEON	1
R112	100K	MCPMR02SJ0104A10	MULTICOMP	1
R113	1K2	ROX2SJ1K2	TE	1
R114	1Mega ohm Size: SMD 1206, Tolerance:1%	1Mega ohm Size: SMD 1206, Tolerance:1%	ANY	1
R115	1Mega ohm Size: SMD 1206, Tolerance:1%	1Mega ohm Size: SMD 1206, Tolerance:1%	ANY	1
R125	2K	PR02000202001JR500	VISHAY	1
S101	Tactile switch	430 156 095 726	WURTH	1
ZD104	11V	MMSZ5241B-V-GS08	VISHAY	1
ZD105	11V	MMSZ5241B-V-GS08	VISHAY	1

Table 11 Bill-of-materials (SECONDARY V_{cc} SUPPLY)

Designator	Value	Part number	Manuf.	Quantity
C104	250V 4.7u	UVR2E4R7MPD1TD	NICHICON	1
C112	250V 0.1u	C3216X7R2E104K160AA	TDK	1
D102	600V 1A	ES1J	FAIRCHILD	1
R102	100 ohm Size: SMD 1206, Tolerance:1%	Size: 1206, Tolerance: 1%	ANY	1
R122	2Meg2 ohm Size: SMD 1206, Tolerance:1%	Size: 1206, Tolerance: 1%	ANY	1

Table 12 Bill-of-materials (JUMPER CONFIG. For 20W application)

Designator	Value	Part number	Manuf.	Quantity
J1	SHORT(1-2)	1-826629-0 (2 PINS)	TE	1
J2	SHORT(1-2)	1-826629-0 (2 PINS)	TE	1
J4	SHORT(1-2)	1-826629-0 (2 PINS)	TE	1
J5	SHORT(1-2)	1-826629-0 (2 PINS)	TE	1
J6	OPEN	1-826629-0 (2 PINS)	TE	-
J7	OPEN	1-826629-0 (2 PINS)	TE	-
J8	OPEN	1-826629-0 (2 PINS)	TE	-
J9	SHORT(1-2)	1-826629-0 (3 PINS)	TE	1
J10	SHORT(1-2)	1-826629-0 (3 PINS)	TE	1
J11	SHORT(1-2)	1-826629-0 (3 PINS)	TE	1
J12	OPEN	1-826629-0 (2 PINS)	TE	-
J13	OPEN	1-826629-0 (2 PINS)	TE	-
J14	OPEN	1-826629-0 (2 PINS)	TE	-
J15	SHORT(1-2)	1-826629-0 (3 PINS)	TE	1
J16	SHORT(1-2)	1-826629-0 (2 PINS)	TE	1
J17	SHORT(1-2)	1-826629-0 (2 PINS)	TE	1
J101	SHORT(2-3)	1-826629-0 (3 PINS)	TE	1
J102	SHORT(1-2)	1-826629-0 (2 PINS)	TE	1
J103	SHORT(1-2)	1-826629-0 (2 PINS)	TE	1
J104	SHORT(1-2)	1-826629-0 (2 PINS)	TE	1
J105	SHORT(1-2)	1-826629-0 (2 PINS)	TE	1
J106	OPEN	1-826629-0 (2 PINS)	TE	-
J107	OPEN	1-826629-0 (2 PINS)	TE	-
J108	OPEN	1-826629-0 (2 PINS)	TE	-
J109	OPEN	1-826629-0 (2 PINS)	TE	-
J110	SHORT(1-2)	1-826629-0 (2 PINS)	TE	1
J111	SHORT(2-3)	1-826629-0 (3 PINS)	TE	1

Table 13 Bill-of-materials (JUMPER CONFIG. For 80W application)

Designator	Value	Part number	Manuf.	Quantity
J1	SHORT(1-2)	1-826629-0 (2 PINS)	TE	1
J2	SHORT(1-2)	1-826629-0 (2 PINS)	TE	1
J4	SHORT(1-2)	1-826629-0 (2 PINS)	TE	1
J5	OPEN	1-826629-0 (2 PINS)	TE	-
J6	OPEN	1-826629-0 (2 PINS)	TE	-
J7	SHORT(1-2)	1-826629-0 (2 PINS)	TE	1
J8	OPEN	1-826629-0 (2 PINS)	TE	-
J9	SHORT(1-2)	1-826629-0 (3 PINS)	TE	1
J10	SHORT(2-3)	1-826629-0 (3 PINS)	TE	1
J11	SHORT(2-3)	1-826629-0 (3 PINS)	TE	1
J12	SHORT(1-2)	1-826629-0 (2 PINS)	TE	1
J13	SHORT(1-2)	1-826629-0 (2 PINS)	TE	1
J14	SHORT(1-2)	1-826629-0 (2 PINS)	TE	1
J15	SHORT(1-2)	1-826629-0 (3 PINS)	TE	1
J16	SHORT(1-2)	1-826629-0 (2 PINS)	TE	1
J17	SHORT(1-2)	1-826629-0 (2 PINS)	TE	1
J101	SHORT(2-3)	1-826629-0 (3 PINS)	TE	1
J102	SHORT(1-2)	1-826629-0 (2 PINS)	TE	1
J103	SHORT(1-2)	1-826629-0 (2 PINS)	TE	1
J104	SHORT(1-2)	1-826629-0 (2 PINS)	TE	1
J105	SHORT(1-2)	1-826629-0 (2 PINS)	TE	1
J106	SHORT(1-2)	1-826629-0 (2 PINS)	TE	1
J107	SHORT(1-2)	1-826629-0 (2 PINS)	TE	1
J108	SHORT(1-2)	1-826629-0 (2 PINS)	TE	1
J109	SHORT(1-2)	1-826629-0 (2 PINS)	TE	1
J110	SHORT(1-2)	1-826629-0 (2 PINS)	TE	1
J111	SHORT(2-3)	1-826629-0 (3 PINS)	TE	1

Table 14 Bill-of-materials (OTHERS)

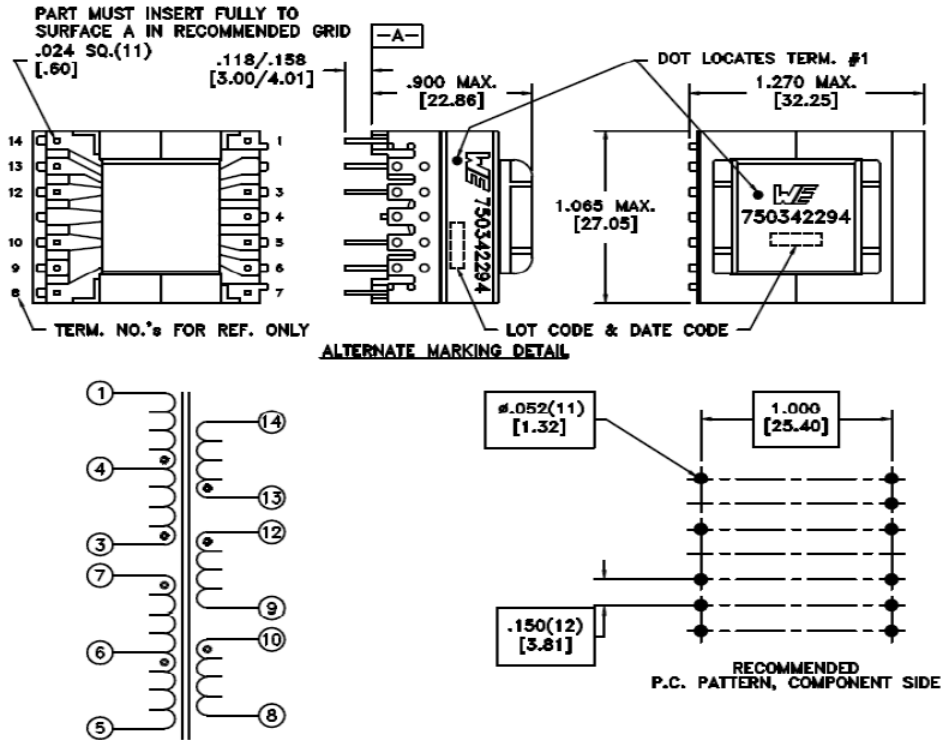
Designator	Value	Part number	Manuf.	Quantity
CN1	1760500000	1760500000	WIEDMULLER	1
CN101, CN103	632002	632002	LUMBERG	2
CN2	612 008 216 21	612 008 216 21	WURTH	1
SCREW AND NETS FOR HEATSINK	M3			2
JUMPER FOR 2PINS & 3PINS HEADER	M7566-05	M7566-05	HARWIN	27
SOCKET1-A, SOCKET1-B	SLW-104-01-G-D	SLW-104-01-G-D	SAMTEC	2
SOCKET2-A, SOCKET2-B	BCS-114-L-S-TE	BCS-114-L-S-TE	SAMTEC	2
ZCD, MFIO, CS, GD0, HV, GD1, VCC, HV_BUS, J10-2, Q1-Drain, AUX-FB*, C8+, C14+	TEST POINTS	5008	KEYSTONE	13
SEC_MAIN*, SEC_SR_VCC, SEC_VCC, SEC_LED+, SEC_LED-	TEST POINTS	5007	KEYSTONE	5
GND, IC_GND	TEST POINTS	5013	KEYSTONE	2
SEC_GND	TEST POINTS	5012	KEYSTONE	1
PCB STANDOFF SPACER (TOP) - MALE	M4 50mm	05.14.501	ETTINGER	4
PCB STANDOFF SPACER (BOTTOM) - FEMALE	M4 20mm	05.04.203	ETTINGER	4
MFIO_bnc, ZCD_bnc, CS_bnc	NOT MOUNTED	NOT MOUNTED		
D8	0 ohm	0 ohm Size: SMD 1206	ANY	1
S1, S2	Slide switch	09-03290.01	EAO	2
S3	Slide switch	09-03290.01	EAO	1

Table 15 Bill-of-materials (Synchronous rectification option)

Designator	Value	Part number	Manuf.	Quantity
C106	160V 10u	160LLE10MEFC8X9	RUBYCON	1
C107	250V 0.1u	C3216X7R2E104K160AA	TDK	1
C108	NOT MOUNTED	NOT MOUNTED		
C109	50V 4.7u	12065C475KAT2A	AVX	1
D104	600V 1A	ES1J	FAIRCHILD	1
D105	100V 0.2A	BAV19W	DIODES INC	1
Q102	2SC3902T	2SC3902T	ONSEMI	1
Q103	IPB600N25N3 G	IPB600N25N3 G	INFINEON	1
Q109	BSP298	BSP298	INFINEON	1
R108	NOT MOUNTED	NOT MOUNTED		
R109	Value: 33k ohm Size: 1206, Tolerance: 1%	RC1206FR-xxxxx CRCW1206xxxxFKEA or equivalent	YAGEO VISHAY or equivalent	1
R110	Value: 1 kohm Size: 1206, Tolerance: 1%	RC1206FR-xxxxx CRCW1206xxxxFKEA or equivalent	YAGEO VISHAY or equivalent	1
R111	Value: 10 ohm Size: 1206, Tolerance: 1%	RC1206FR-xxxxx CRCW1206xxxxFKEA or equivalent	YAGEO VISHAY or equivalent	1
R123	Value: 100 kohm Size: 1206, Tolerance: 1%	RC1206FR-xxxxx CRCW1206xxxxFKEA or equivalent	YAGEO VISHAY or equivalent	1
R126	NOT MOUNTED	NOT MOUNTED		
R127	0 Ohm	RC1206FR-xxxxx CRCW1206xxxxFKEA or equivalent	YAGEO VISHAY or equivalent	1
U101		TEA1791AT/N1,118	NXP	1
ZD103	33V	MMSZ5257B-V-GS08	VISHAY	1

5.2 Transformer specifications

20 W transformer specification

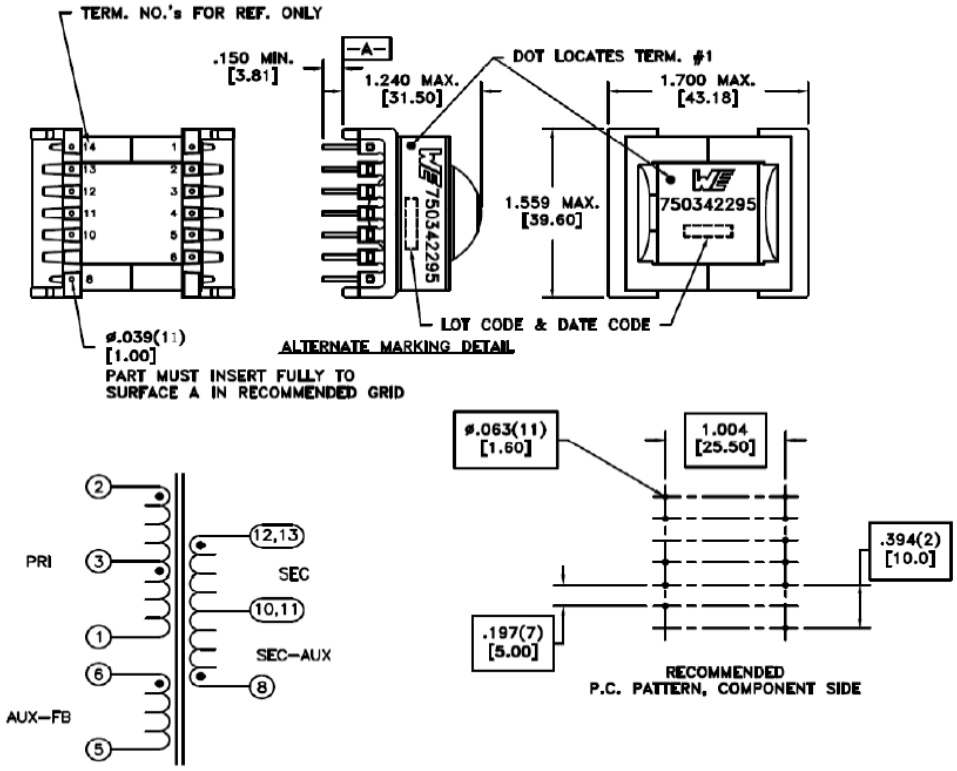


ELECTRICAL SPECIFICATIONS @ 25°C unless otherwise noted:

PARAMETER		TEST CONDITIONS	VALUE
D.C. RESISTANCE	3–1	@20°C	1.984 ohms max
D.C. RESISTANCE	7–6	@20°C	2.343 ohms max
D.C. RESISTANCE	6–5	@20°C	1.144 ohms max
D.C. RESISTANCE	13–14	@20°C	3.025 ohms max
D.C. RESISTANCE	12–9	@20°C	0.158 ohms max
D.C. RESISTANCE	10–8	@20°C	2.651 ohms max
INDUCTANCE	3–1	50kHz, 100mVAC, Ls	1600uH ±7%
LEAKAGE INDUCTANCE	3–1	tie(5+6+7+8+9+10+12+13), 100kHz, 100mVAC, Ls	35.0 uH max
DIELECTRIC	1–14	tie(4+5,8+9+10+12+13) 3750VAC, 1 second	–
DIELECTRIC	14–CORE	tie(8+9+10+12+13) 3750VAC, 1 second	–
TURNS RATIO		(3–1):(7–6)	2.35:1, ±2%
TURNS RATIO		(3–1):(6–5)	4.71:1, ±2%
TURNS RATIO		(3–1):(13–14)	5.50:1, ±2%
TURNS RATIO		(3–1):(12–9)	3.88:1, ±2%
TURNS RATIO		(3–1):(10–8)	6.28:1, ±2%

GENERAL SPECIFICATIONS:
OPERATING TEMPERATURE RANGE: −40°C to +125°C including temp rise.
Designed to comply with the following requirements as defined by IEC61558−2−16
− Reinforced insulation for a primary circuit at a working voltage of 432VDC.

80 W transformer specifications



PIN 3 CUT OFF AFTER SOLDER

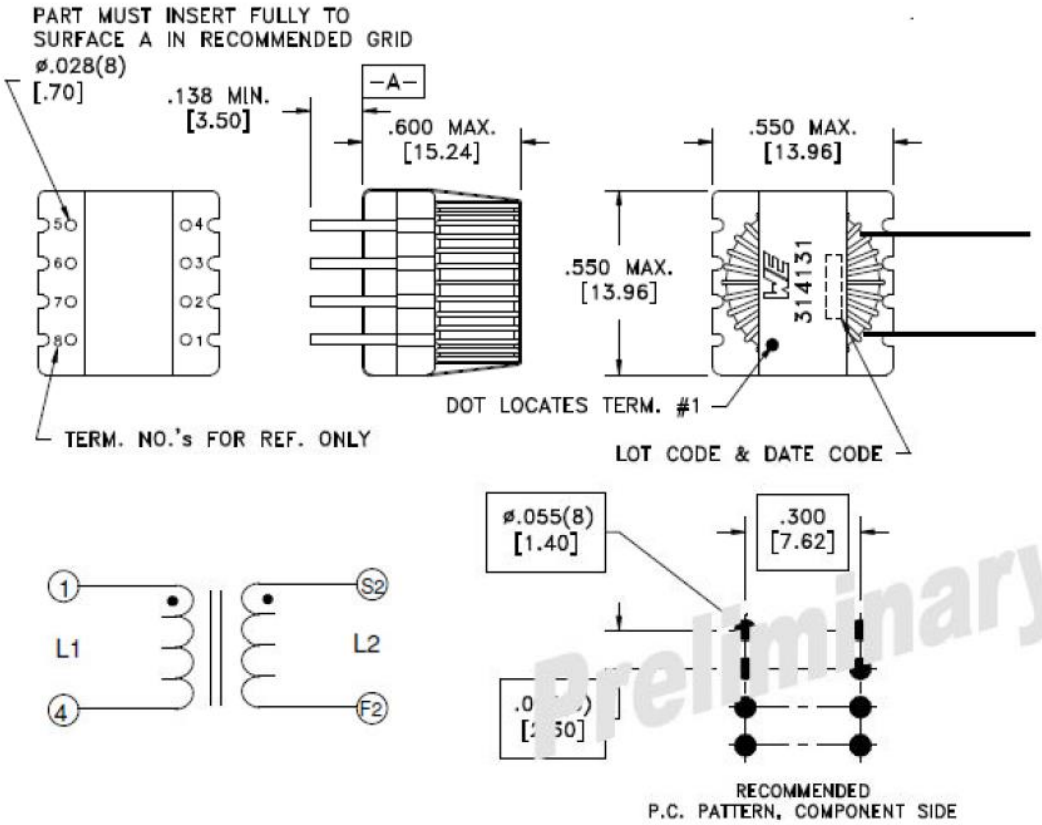
ELECTRICAL SPECIFICATIONS @ 25°C unless otherwise noted:

PARAMETER		TEST CONDITIONS	VALUE
D.C. RESISTANCE	2–1	@20°C	0.145 ohms max
D.C. RESISTANCE	6–5	@20°C	1.55 ohms max
D.C. RESISTANCE	12–10	@20°C,tie(12+13,10+11)	0.02 ohms max
D.C. RESISTANCE	11–8	@20°C	3.94 ohms max
INDUCTANCE	2–1	50kHz, 100mVAC, Ls	310uH ±7%
LEAKAGE INDUCTANCE	2–1	tie(5+6+8+10+11+12+13) 100kHz, 100mVAC, Ls	7.0 uH max
DIELECTRIC	3–10	tie(10+11,3+5), 3000VAC, 1 second	–
DIELECTRIC	10–core	tie(10+11), 3000VAC, 1 second	–
TURNS RATIO		(2–1):(6–5)	2.348:1, ±2%
TURNS RATIO		(2–1):(8–11)	2.348:1, ±2%
TURNS RATIO		(2–1):(12–10),tie(10+11,12+13)	3.857:1, ±2%

GENERAL SPECIFICATIONS:

OPERATING TEMPERATURE RANGE:–40°C TO 125°C including temp rise.

Dimming transformer specifications



Preliminary

ELECTRICAL SPECIFICATIONS @ 25°C unless otherwise noted:

D.C. RESISTANCE (@20°C):	1-4 , 0.32 Ohms ±10%.
	S2-F2 , 0.52 Ohms ±10%.
DIELECTRIC RATING:	3000VAC, 1 minute tested by applying 3750VAC for 1 second between pins 1-S2.
INDUCTANCE:	5.0 mH min, 10kHz, 300mVAC, 0mADC, 1-4, Ls.
	5.0 mH min, 10kHz, 300mVAC, 0mADC, S2-F2, Ls.
TURNS RATIO:	(1-4):(S2-F2), (1):(1.00), ±1%.

6 References

[1] ICL8105 Datasheet

[2] ICL8105 Design Guide

[3] .dpvision Basic Mode User Manual

Revision history

Document version	Date of release	Description of changes
1.3	2023-01-19	Editorial changes
1.2	2015-11-15	5.1: Bill of materials Page 38: 80 W transformer specifications Page 6_ Added schematic for supplementary circuit
1.1	2015-10-19	Editorial changes
1.0	2015-07-14	Initial release

Trademarks
All referenced product or service names and trademarks are the property of their respective owners.

Edition 2023-01-19

Published by

Infineon Technologies AG

81726 Munich, Germany

© 2023 Infineon Technologies AG. All Rights Reserved.

Do you have a question about this document?

Email: erratum@infineon.com

Document reference
AN_201409_PL21_015

IMPORTANT NOTICE

The information contained in this application note is given as a hint for the implementation of the product only and shall in no event be regarded as a description or warranty of a certain functionality, condition or quality of the product. Before implementation of the product, the recipient of this application note must verify any function and other technical information given herein in the real application. Infineon Technologies hereby disclaims any and all warranties and liabilities of any kind (including without limitation warranties of non-infringement of intellectual property rights of any third party) with respect to any and all information given in this application note.

The data contained in this document is exclusively intended for technically trained staff. It is the responsibility of customer's technical departments to evaluate the suitability of the product for the intended application and the completeness of the product information given in this document with respect to such application.

For further information on the product, technology, delivery terms and conditions and prices please contact your nearest Infineon Technologies office (**www.infineon.com**).

WARNINGS

Due to technical requirements products may contain dangerous substances. For information on the types in question please contact your nearest Infineon Technologies office.

Except as otherwise explicitly approved by Infineon Technologies in a written document signed by authorized representatives of Infineon Technologies, Infineon Technologies' products may not be used in any applications where a failure of the product or any consequences of the use thereof can reasonably be expected to result in personal injury.