External fast switch-off circuit for XDP™ XDP7xx hot-swap controllers

About this document

Scope and purpose

This application note explains the external fast switch-off circuit to be used with Infineon's XPD™ XDP7xx, the wide input voltage hot-swap controllers with programmable digital safe operating area (SOA) control. It describes how to solve different design challenges related to switch-off with the fast switch circuit in real hot-swap applications.

This document focuses on XDP710-002, but the external fast switch-off circuit described in this document is also applicable for Infineon's XDP711-001 and similar hot-swap controller products.

Intended audience

This document is intended for the engineers and developers working with Infineon XDP710-002, XDP711-001, or similar products of the XDP7xx series.

Table of contents

About this document **1**
Table of contents **2**
1 Introduction **3**
1.1 Brief introduction to XDP710-002 3
1.2 Abbreviations and acronyms 4
2 Gate turn-off configurations and PMBus command **5**
2.1 PMBus command TURN_OFF_CTRL 5
2.2 Configurations of GATE_FAST_PD and GATE_SLOW_PD 6
3 External fast switch-off circuit in high-power applications **7**
3.1 Application schematics 7
3.2 Working principle of external fast switch-off circuit #1 7
3.3 Calculations of switch-off time 8
3.4 Test results for high power application 11
4 External fast switch-off circuit in boost mode power-up **14**
4.1 Application schematics 14
4.2 Working principle of external fast switch-off circuit #2 14
4.3 Test results for Boost Mode Power Up 15
5 Summary **19**
References **20**
Revision history **21**
Disclaimer **22**

1 Introduction

1.1 Brief introduction to XDP710-002

Infineon hot-swap controllers, such as XDP710-002, are wide input voltage hot-swap controllers with programmable digital SOA control, ideal for artificial intelligence (AI) servers and telecom infrastructure [1]. Key resource of the hot-swap controllers include high-precision AFE, extensive variety of system warnings and protections, high-speed communication via PMBus to main CPU, reset, shutdown, retry, and digital SOA control gate driver and charge pump for a controlled turn-on and safe operation. A typical application block diagram of XDP710-002 is shown in Figure 1. See the XDP710-002 datasheet for more information on its pin configuration and package details, product characteristics, features, and its applications [2].

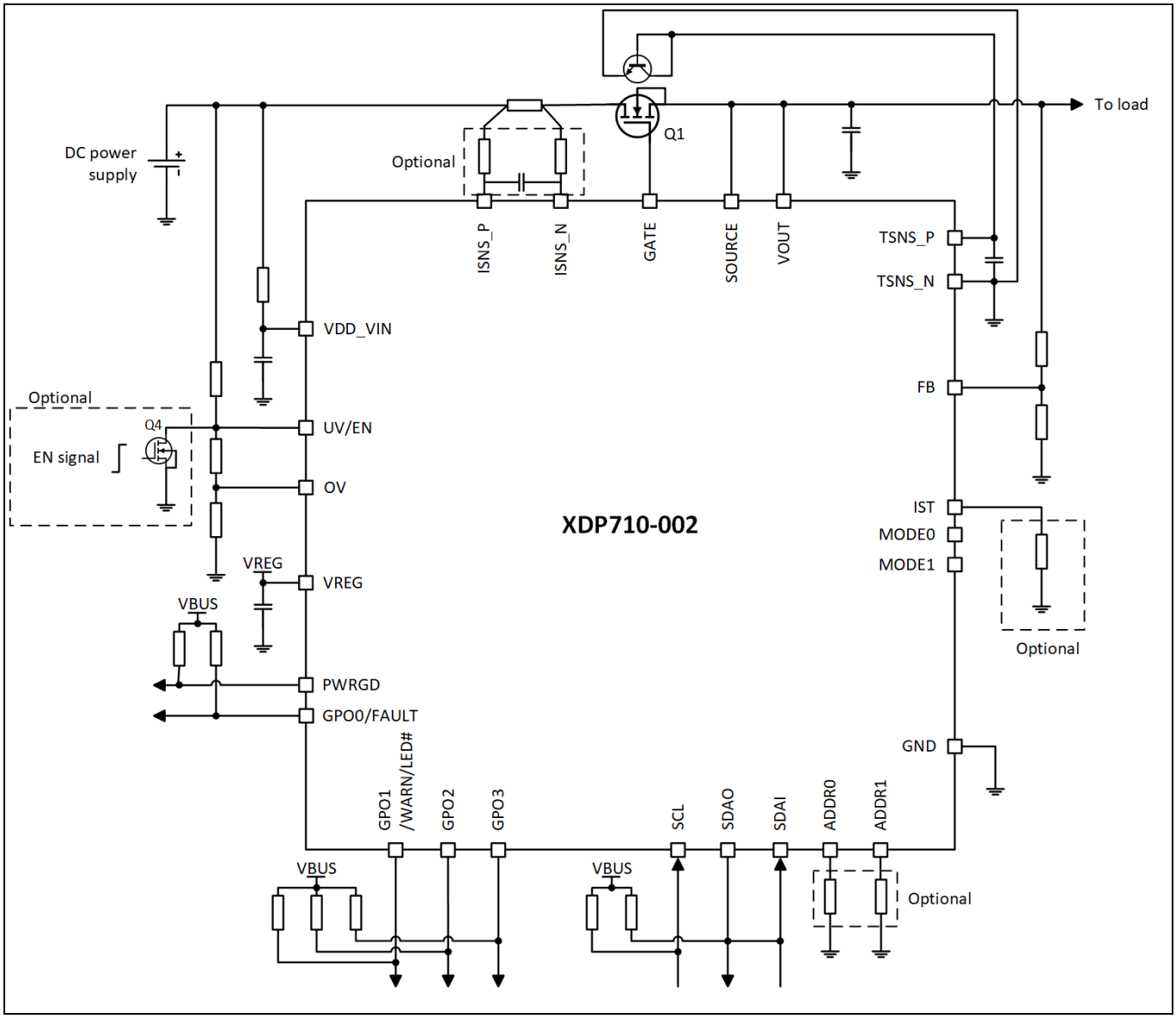

Figure 1 Application block diagram of XDP710-002

1.2 Abbreviations and acronyms

The following table lists the abbreviations and acronyms used in this document.

Table 1 Abbreviations and acronyms

Term	Definition
AFE	Analog front-end
AI	Artificial intelligence
BJT	Bipolar junction transistor
CPU	Central processing unit
DNP	Do not populate
EN	Enable
GND	Ground
GPO	General purpose output
GUI	Graphical user interface
IC	Integrated circuit
LED	Light-emitting diode
MOSFET	Metal-oxide semiconductor field-effect transistor
OC	Overcurrent
OT	Overtemperature
OUV	Output undervoltage
OV	Overvoltage
OVin	Input overvoltage
PMBus	Power management bus
SOA	Safe operating area
SOC	Severe overcurrent
TVS	Transient voltage suppression
UV	Undervoltage
WD	Watchdog

2 Gate turn-off configurations and PMBus command

XDP710-002 supports different PMBus commands [3] for parameter configurations and system monitoring [4]. The following are the configurations and PMBus command related to the gate turn-off of the power MOSFETs.

2.1 PMBus command TURN_OFF_CTRL

Figure 2 shows the PMBus command TURN_OFF_CTRL for gate turn-off configurations and Figure 3 shows the command bits description.

TURN_OFF_CTRL
Address: 0xE6
Reset: 0x0000
Included in OTP

Fast and 2-step turn-off settings.

Table 278 TURN_OFF_CTRL command structure

	15	14	13	12	11	10	9	8	7	6	5	4	3	2	1	0
Read				GATE_PD_TMR										GATE_SLOW_PD		GATE_FAST_PD
Write																
Reset	0	0	0	0	0	0	0	0	0	0	0	0	0	0	0	0

Figure 2 PMBus command TURN_OFF_CTRL

Field	Bits	Type	Reset	Description
GATE_FAST_PD	0	rw	0x0 (0 = 0 dec)	**GATE_FAST_PD sets the current level for the first phase of the 2-step turn-off.** • If GATE_FAST_PD = 0: GATE_SLOW_PD and GATE_PD_TMR are ignored. Gate discharges with a single continuous phase of 1.5A • If GATE_FAST_PD = 1: - When GATE_PD_TMR = 0: GATE_FAST_PD is ignored. Gate discharges with a single continuous phase of GATE_SLOW_PD. - When GATE_PD_TMR different than 0: Gate discharges with two step turn-off
GATE_SLOW_PD	[2:1]	rw	0x0 (0 = 0 dec)	Sets the current level of the regular turn-off and the second phase of the 2-step turn-off.
GATE_PD_TMR	[12:3]	rw	0x00 (0 dec)	GATE_PD_TMR sets the time of the first phase of the two step controlled turn-off. This timer can be configured from 0 to 25575ns in 25ns steps. When timer is set to 0 ns, gate discharges slowly with GATE_SLOW_PD. The minimum allowed time to be programmed in GATE_PD_TMR (if it's not 0) is 250 ns.
RESERVED	[15:13]		0x00	

Figure 3 TURN_OFF_CTRL command bits description

2.2 Configurations of GATE_FAST_PD and GATE_SLOW_PD

Figure 4 shows the configuration details of GATE_FAST_PD and GATE_SLOW_PD.

At emergency faults such as OVin and SOC, the external power MOSFET(s) can be turned off by a one-step current sinking level at a gate current (fast pull-down current, I_{GATE_FPD}) of 1.5 A maximum, where the proper external gate resistors may be used to lower this gate current. Alternatively, a two-step power down can be used, with a 200 Ω pull-down for a time defined by GATE_PD_TMR timer, as the first step, and then with a gate current defined by GATE_SLOW_PD as the second step.

At regular fault MOSFET power down control and Boost Mode Power Up, the gate turn-off current (slow pull-down current, I_{GATE_SPD}) is defined only by the GATE_SLOW_PD timer, and the maximum value is 1.25 mA, where the examples of regular faults are OC, OV, UV, OUV, WD, OT, and so on. For some special circumstances, the gate turn-off current may be insufficient to meet the turn-off time requirements, depending on the MOSFET's gate charge and the number of power MOSFETs in parallel. This application note focuses on the solutions for these specific use cases.

Table 280 Gate fast pull down configuration

GATE_FAST_PD	Value	Description
0x0	0	1.5A
0x1	1	200Ω

GATE_SLOW_PD	Value	Description
0x0 (00 bin)	0	250uA
0x1 (01 bin)	1	500uA
0x2 (10 bin)	10	750uA
0x3 (11 bin)	11	1250uA

Figure 4 Configurations of GATE_FAST_PD and GATE_SLOW_PD

3 External fast switch-off circuit in high-power applications

3.1 Application schematics

Figure 5 shows a schematic of a high-power application with XDP710-002, totally eight OptiMOS™ power MOSFETs (IPT017N10NM5LF2 [5]) in parallel are used.

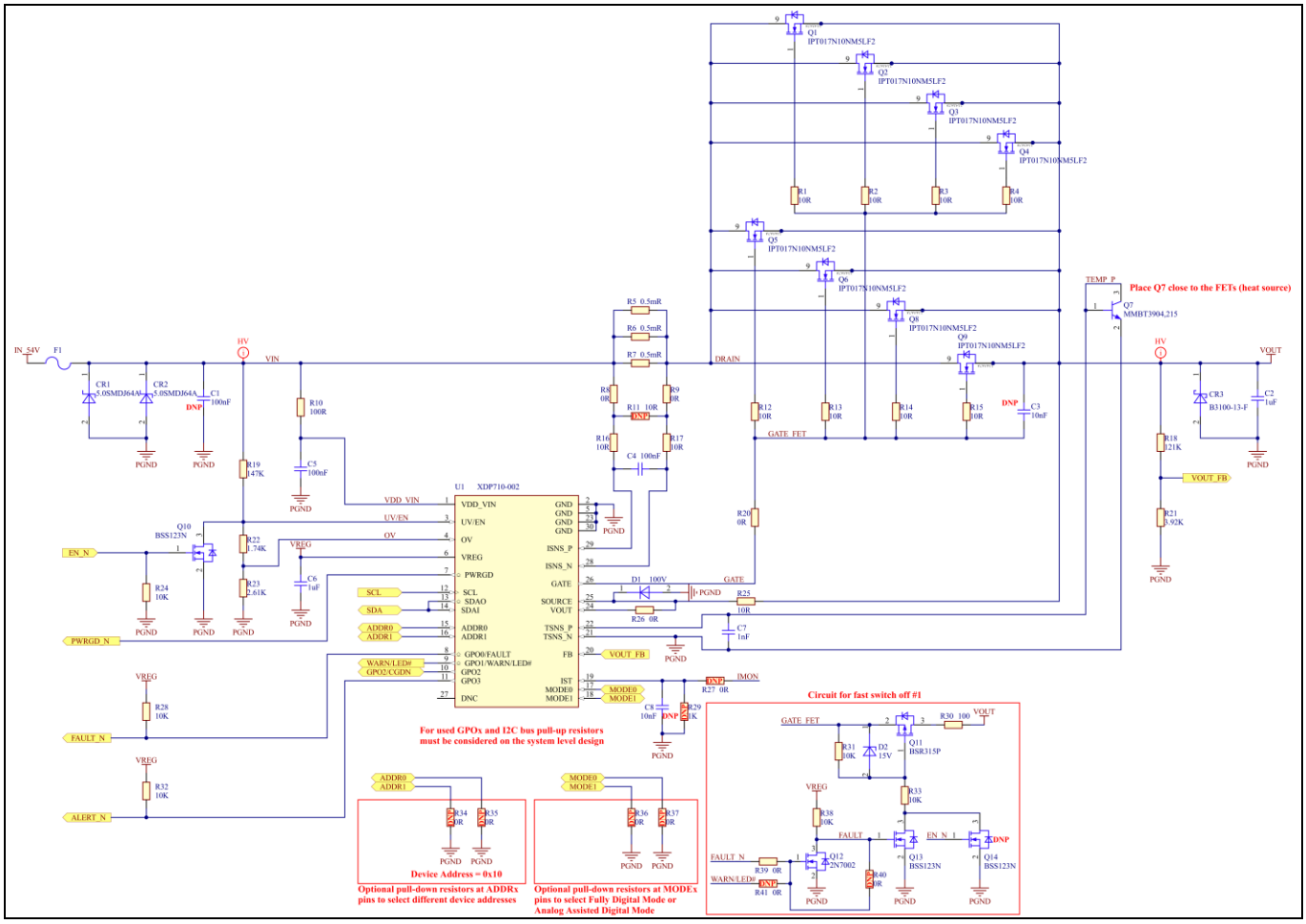

Figure 5 Schematic of high-power applications with XDP710-002

3.2 Working principle of external fast switch-off circuit #1

Figure 6 shows the closer view of the external circuit for fast switch-off #1. A P-channel small signal MOSFET, Q11, is used to connect the gate to the source of the MOSFET through a resistor, R30, controlled by digital signals FAULT_N (active low FAULT) or FAULT (active high FAULT), or an external control signal EN_N (active low). If FAULT_N is connected to the fault pins of other devices, the alternative signal, GPO1/WARN/LED#, of the XDP710-002 can be used as the control signal, instead of FAULT_N. When Q11 turns ON, its $R_{DS(on)}$ is negligible comparing to R30. The Zener diode, D2, is used to clamp the gate-to-source voltage of Q11 to prevent damage when the N-channel small signal MOSFET Q13 or Q14 is ON.

When both Q13 and Q14 are off, Q11 is off and the external power MOSFETs can be controlled by XDP710-002 normally for startup (with or without) Boost Mode, and normal operations when the power MOSFETs' gate are fully ON.

The N-channel small signal MOSFET Q12 is to invert the signal FAULT_N if the controller's GPO0/FAULT is configured as active low. If GPO0/FAULT is configured active high, R39 can be populated, but depopulate Q12 and R38.

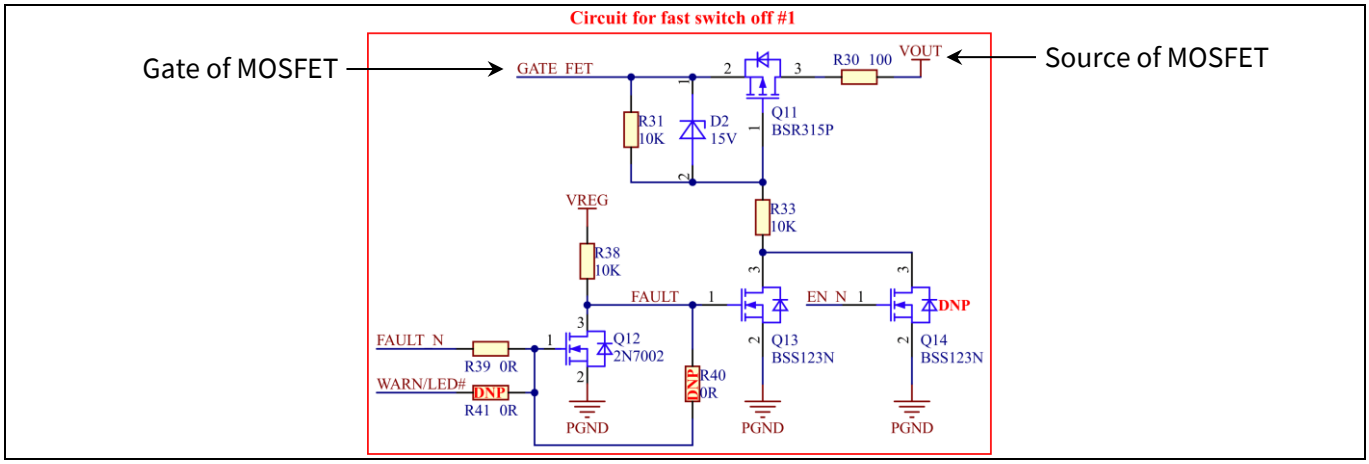

Figure 6 Closer view of external circuit for fast switch off #1

3.3 Calculations of switch-off time

Figure 7 shows the simplified schematics for the external circuit for fast switch-off #1, where Figure 7 (a) shows that no fault happens and it is in normal operation, so Q11 is OFF and its body diode is not conducting unless the gate source voltage is negative for the power MOSFET.

Figure 7 (b) shows that a fault is happening and hence Q11 is ON and the power MOSFETs switch OFF. When the power MOSFETs switch off at normal faults, the resistor R30's current I_{R30} and slow pull-down current I_{GATE_SPD} discharge through the MOSFETs' gate. In this section, calculations are presented for the switch-off time at a normal fault.

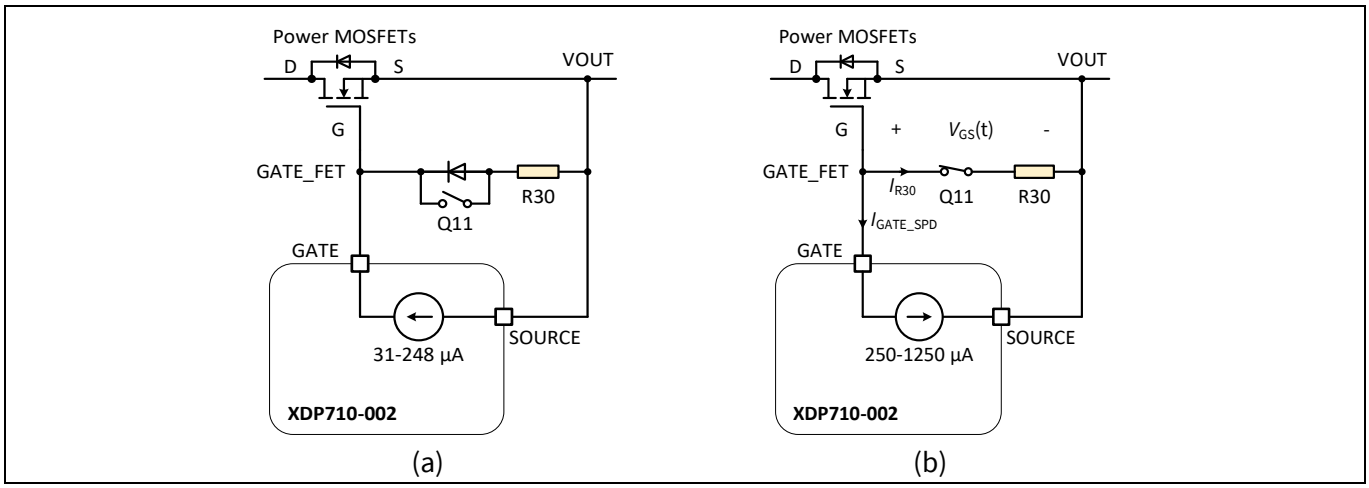

Figure 7 Simplified schematics of external circuit for fast switch-off #1, (a) no fault and normal operation, (b) at fault and power MOSFETs switch-off

Figure 8 shows SIMetrix simulation waveforms of fast switch-off at a regular fault. The switch-off time t_{off} is the time from V_{GS} voltage starts to drop until it reaches the turn off threshold voltage $V_{GS(th)}$, when the input current I_{IN} drops to 0 A.

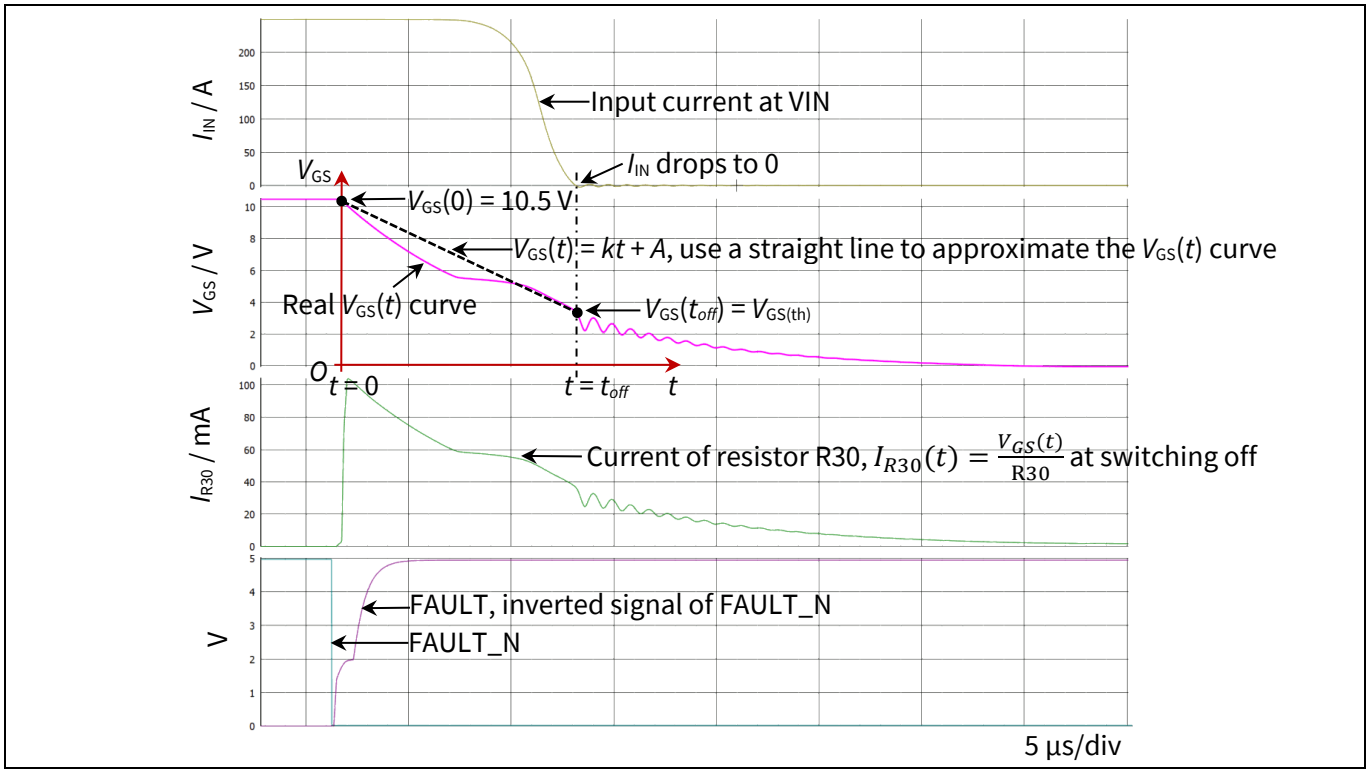

Figure 8 SIMetrix simulation waveforms of fast switch off at a regular fault

At switching off, the current in the resistor, R30, is calculated as follows:

$$I_{R30}(t) = \frac{V_{GS}(t)}{R30}$$

Equation 1

The equation of the real $V_{GS}(t)$ curve is unknown, but a straight line of the following equation is used to approximate the real $V_{GS}(t)$ curve, with a Cartesian coordinate system V_{GS}-O-t , as shown in Figure 8.

$$V_{GS}(t) = kt + A$$

Equation 2

At time $t = 0$, the $V_{GS}(t)$ is a known value as shown in the following equation, which is the gate voltage when FET is fully ON as specified for XDP710-002.

$$V_{GS}(0) = 10.5\,V$$

Equation 3

At time $t = t_{off}$, the $V_{GS}(t)$ is another known value, which is the gate threshold voltage of the power MOSFET:

$$V_{GS}(t_{off}) = V_{GS(th)}$$

Equation 4

By combining Equation 2 to Equation 4, the coefficients of the straight line are:

$$k = -\frac{V_{GS}(0) - V_{GS(th)}}{t_{off}}$$

$$A = V_{GS}(0) = 10.4\,V$$

Equation 5

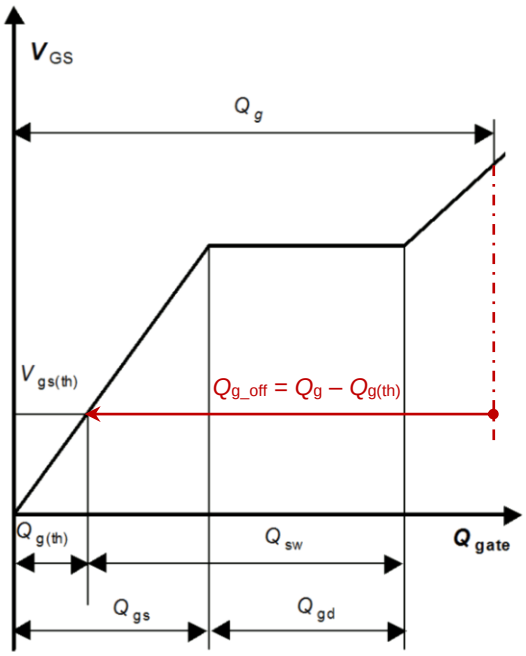

Figure 9 MOSFET gate charge waveforms

Figure 9 shows the gate charge waveforms of the power MOSFET IPT017N10NM5LF2. The total gate charges for one MOSFET switch-off is calculated as follows:

$$Q_{g_off} = Q_g - Q_{g(th)}$$

Equation 6

For eight (n = 8) power MOSFETs IPT017N10NM5LF2 in parallel, the total charges to turn off the MOSFET gate is given by:

$$n \times Q_{g_off} = \int_0^{t_{off}} \left[I_{GATE_SPD} + \frac{V_{GS}(t)}{R30} \right] dt = \left[I_{GATE_SPD} + \frac{V_{GS}(0) + V_{GS(th)}}{2 \times R30} \right] \times t_{off}$$

Equation 7

Combining Equation 6 and Equation 7, the switch-off time can be calculated as follows:

$$t_{off} = \frac{n \times [Q_g - Q_{g(th)}]}{I_{GATE_SPD} + \frac{V_{GS}(0) + V_{GS(th)}}{2 \times R30}}$$

Equation 8

Table 2 shows the characteristics of IPT017N10NM5LF2 and XDP710-002, along with other parameters of the system, and the calculated switch off time based on Equation 8.

Table 2 Parameters and switch off time calculation

Parameter	Symbol	Typical value
Characteristics of IPT017N10NM5LF2		
Gate threshold voltage	$V_{GS(th)}$	3.1 V
Gate charge at threshold	$Q_{g(th)}$	41 nC
Gate charge total	Q_g	165 nC
Characteristics of XDP710-002		
Gate voltage (at FET is fully ON)	V_{GATE} $V_{GS}(0)$	10.5 V
Slow pull-down current	I_{GATE_SPD}	250 µA (other values are 500 µA, 750 µA, or 1250 µA, configurable by GATE_SLOW_PD)
Others		
Number of power MOSFETs in parallel	n	8
R30 resistor value	R30	100 Ω
Calculation by Equation 8		
Calculated switch off time	t_{off}	14.5 µs

3.4 Test results for high power application

Figure 10 shows the test waveforms of fast switch-off at a regular fault output undervoltage (OUV), with the same parameters of an 8 kW high-power system as shown in Table 2. The input voltage of 54 V and output load capacitance of 5.1 mF. The measured switch-off time t_{off} is 15.5 µs, which is very close to the calculated results 14.5 µs in Table 2.

Due to the parasitic inductance of the input cables, fast switch-off of the load current causes voltage spikes and ringing in the input voltage (VIN), which can be suppressed by TVS diode(s) at the input. The falling rate of the output voltage VOUT depends on the output load capacitance and the output current.

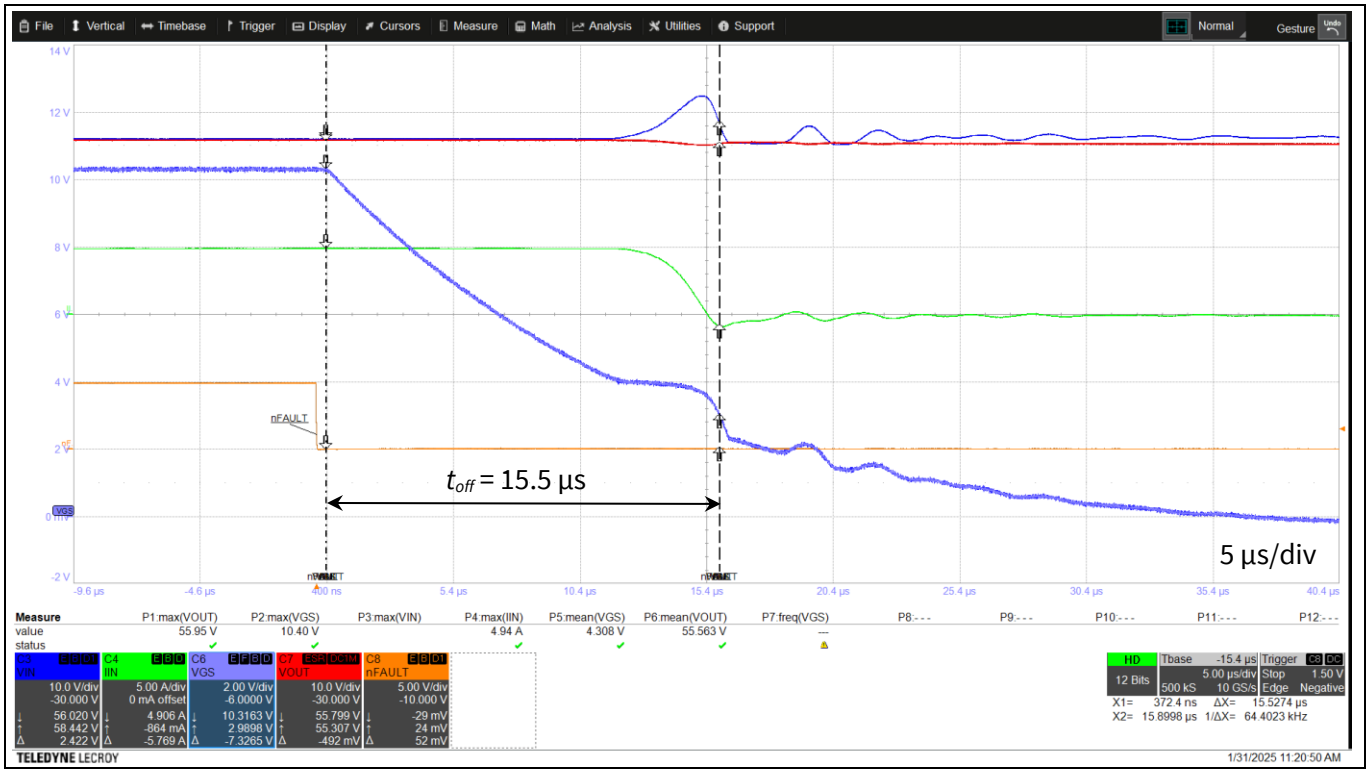

Figure 10 Waveforms of fast switch-off at a regular fault OUV, with the external circuit for fast switch-off #1. Time: 5 µs/div. C3 (blue): VIN 10 V/div, C4 (green): IIN 5A/div, C6 (light blue): VGS 2 V/div, C7 (red): VOUT 10 V/div, C8 (orange): nFAULT (active low FAULT) 5 V/div

For comparison, Figure 11 shows the test waveforms of switch-off at a regular fault output undervoltage (OUV) without the external circuit for fast switch-off #1, with the slow pull-down current I_{GATE_SPD} configured to the maximum value of 1250 µA. The measured switch-off time t_{off} is 675.5 µs, which is much longer than above 15.5 µs with the fast switch-off circuit #1. Therefore, the external circuit for fast switch-off #1 is very useful to decrease the switch-off time for high-power hot-swap applications.

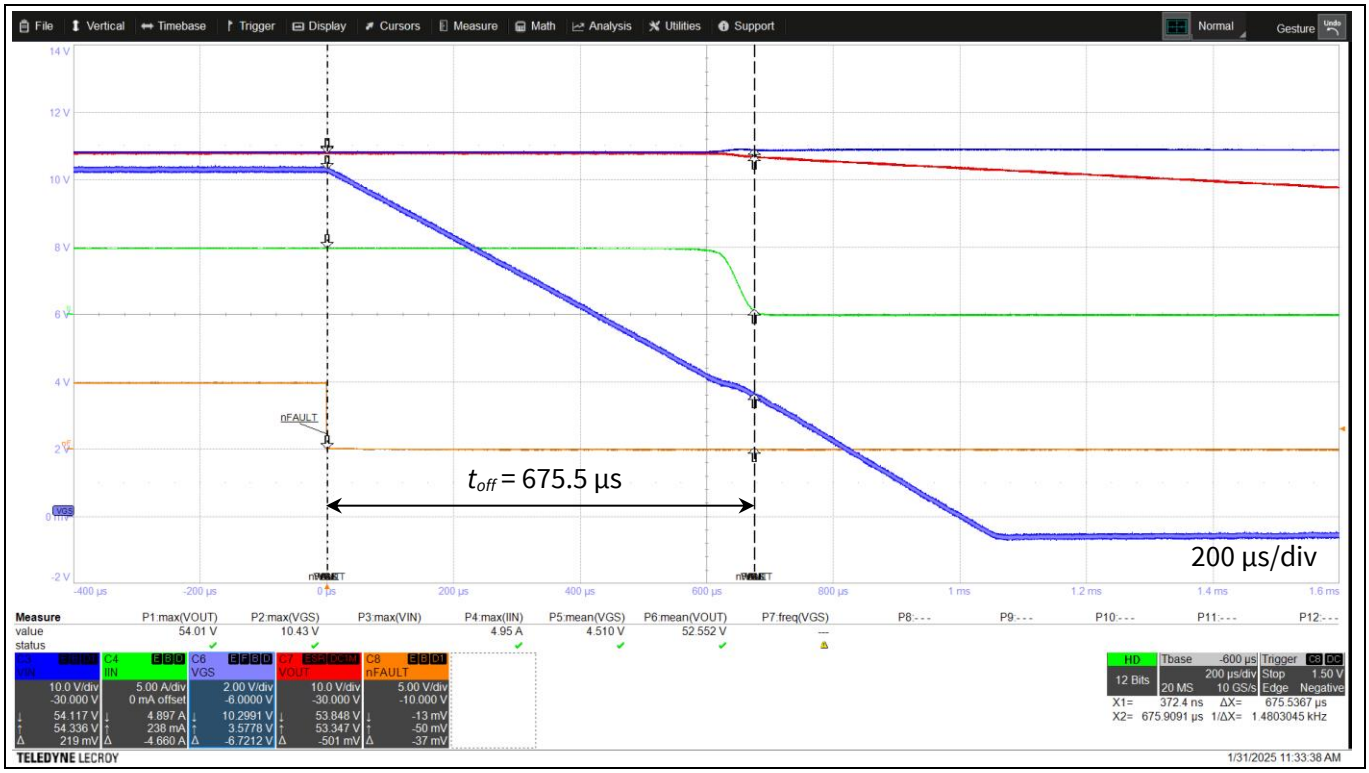

Figure 11 **Waveforms of slow switch-off at a regular fault OUV, without the external circuit for fast switch-off #1, GATE_SLOW_PD set to 1250 µA. Time: 200 µs/div. C3 (blue): VIN 10 V/div, C4 (green): IIN 5A/div, C6 (light blue): VGS 2 V/div, C7 (red): VOUT 10 V/div, C8 (orange): nFAULT (active low FAULT) 5 V/div**

4 External fast switch-off circuit in boost mode power-up

4.1 Application schematics

In some applications, the higher minimum regulation current can exceed the MOSFETs SOA DC line, potentially damaging the MOSFETs. The boost mode allows the MOSFETs to operate at the SOA lines of 1 ms or 100 µs, enabling higher MOSFET currents while still respecting the SOA limits. For more information on boost mode power-up, see the XDP710-002 datasheet.

Figure 12 shows an application with two OptiMOS™ power MOSFETs (IPT015N10N5 [6]) in parallel. Boost mode power-up is necessary for IPT015N10N5. The external circuit for fast switch-off #1 is used for this application, only R14 value adjusted accordingly to meet the system requirements.

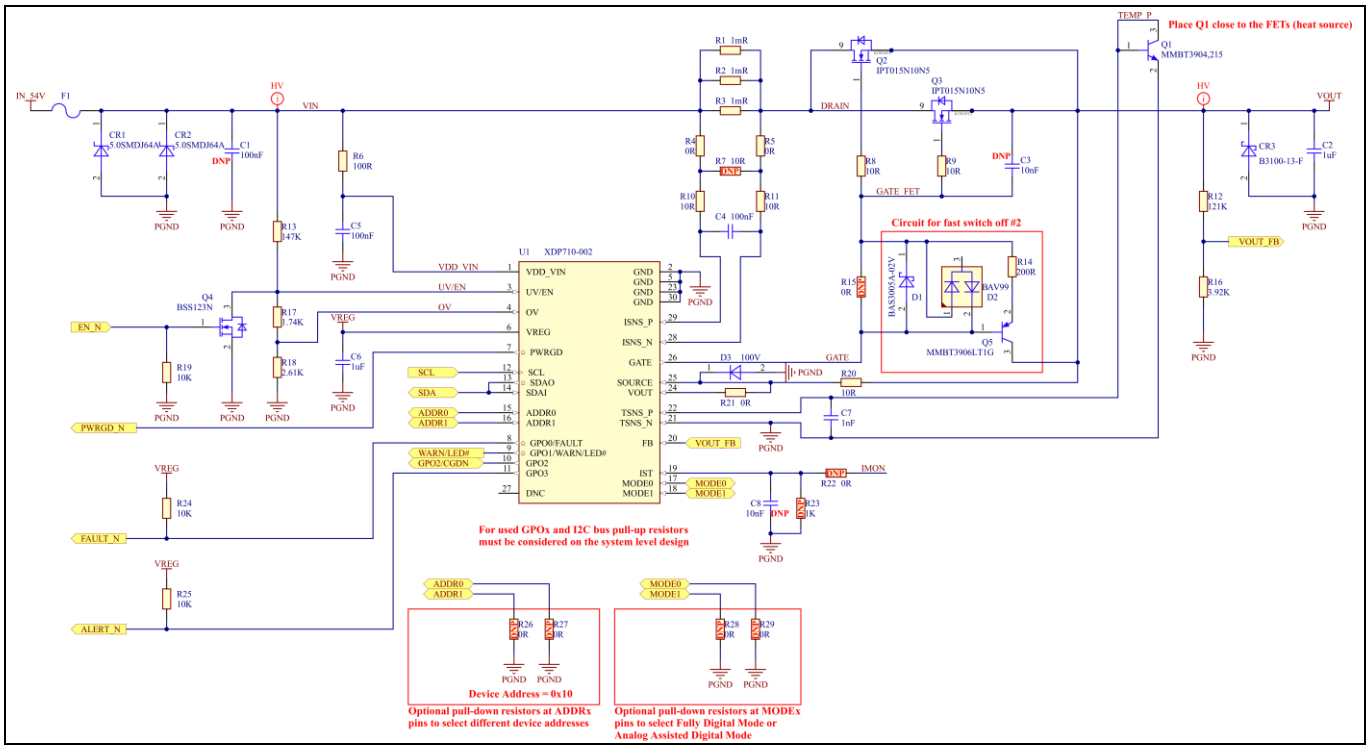

Figure 12 Schematics of applications with XDP710-002 boost mode power-up

4.2 Working principle of external fast switch-off circuit #2

Figure 13 is the closer view of the external circuit for fast switch-off circuit #2.

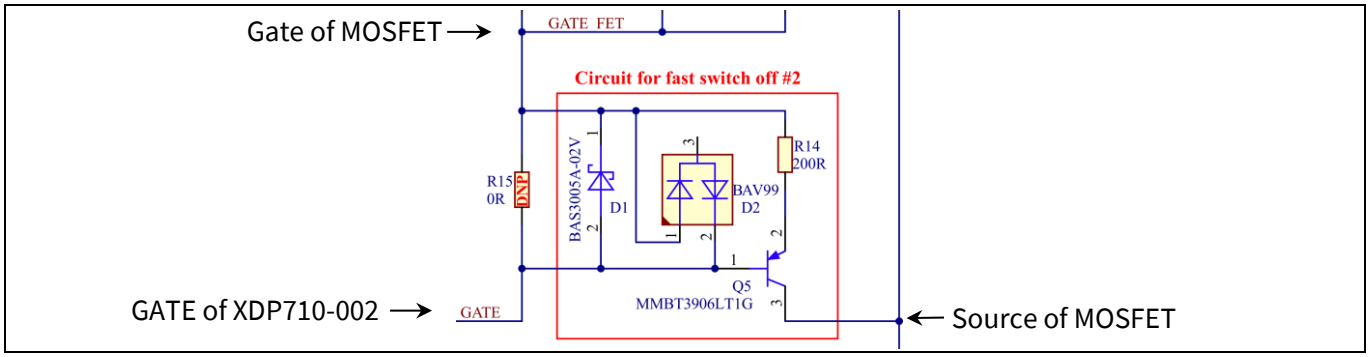

Figure 13 Closer view of external circuit for fast switch-off circuit #2

Figure 14 shows the simplified schematics for the external circuit for fast switch-off circuit #2, (a) for gate turning on, and (b) for gate turning off.

During gate turn-on, as shown in Figure 14(a), the gate charging current I_{DAC_FS} flows from XDP710-002 GATE pin to the gate of external power MOSFETs, through the Zener diode D1. A Schottky diode is used for D1, so that a maximum voltage drop of 0.3 V is observed for the gate-to-source voltage on the MOSFET side. The diodes D2 and BJT transistor Q5 are OFF.

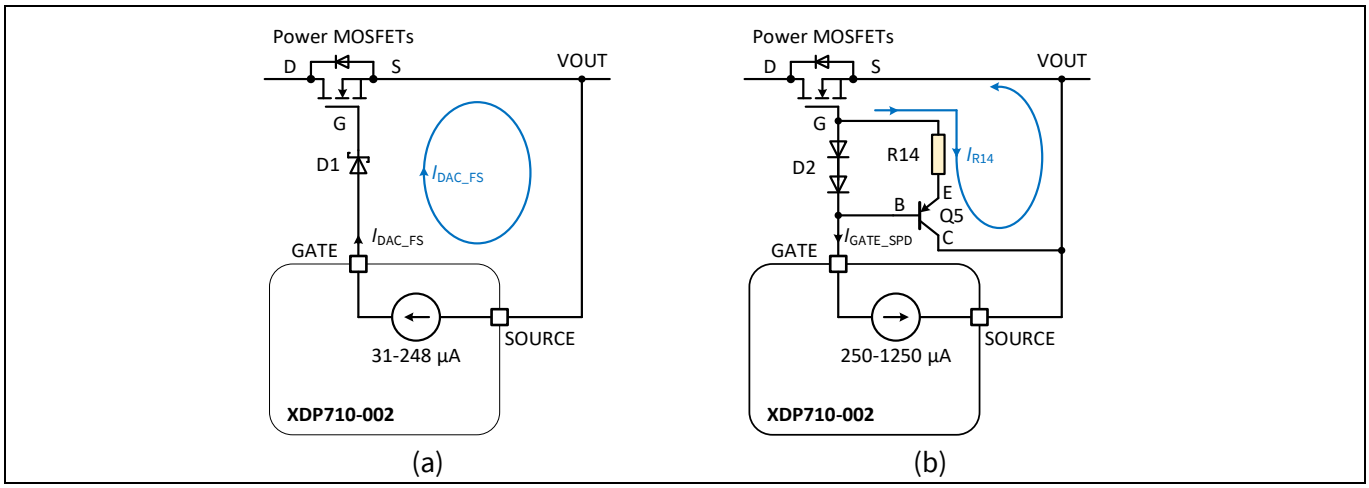

Figure 14 Simplified schematics of external circuit for fast switch-off in circuit #2, (a) gate turn-on, (b) gate turn-off

During gate turn-off, as shown in Figure 14(b), the gate discharging current I_{GATE_SPD} flows from the MOSFET gate to XDP710-002 GATE pin goes through D2, the two diodes in series, and the BJT transistor Q5 turns ON. The voltage drop on the resistor R14 is almost constant (≈ 0.7 V), and the gate-to-source turn off current of the MOSFETs has an extra path through R14 and Q5's emitter terminal (E) to collector terminal (C), with the current value shown in the following equation:

$$I_{R14} = \frac{V_{D2} - V_{EB_Q5}}{R14} \approx \frac{0.7\,V \times 2 - 0.7\,V}{R14} = \frac{0.7\,V}{R14}$$

Equation 9

From Equation 9, the extra gate switching off current I_{R14} is a constant current source, depending on R14 resistor value only. So, users can adjust R14 value to achieve the required switching off time for different situations.

4.3 Test results for Boost Mode Power Up

Figure 15 shows the Infineon's XDP™ Designer [7] GUI configurations for Boost Mode Power Up. BOOSTMODE_TMR timer selects a 0.1 ms (100 µs) pulse with a duty cycle of 10% for the Boost Mode, resulting in a total period of 1 ms and a switching frequency of 1 kHz.

Figure 16 shows the test waveforms of Boost Mode Power Up with the external circuit for fast switch-off circuit #2. With an input voltage of 60 V and an output load capacitance of 4.8 mF, the total startup time is observed to be 275.8 ms.

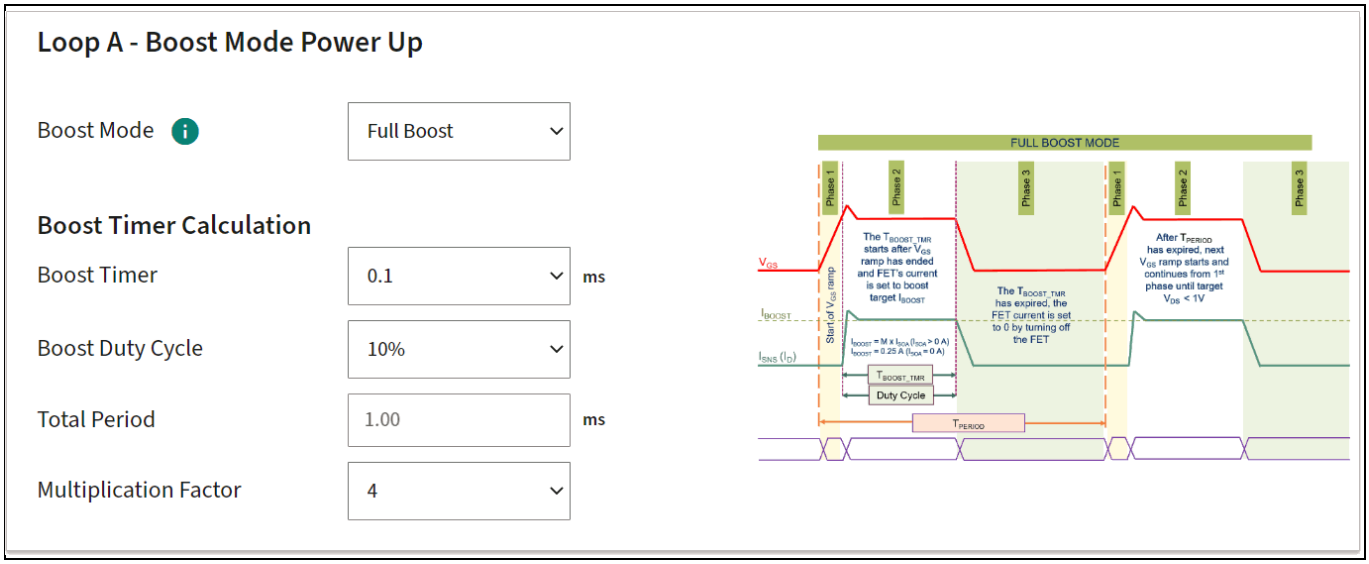

Figure 15 XDP™ Designer GUI configuration for Boost Mode Power Up

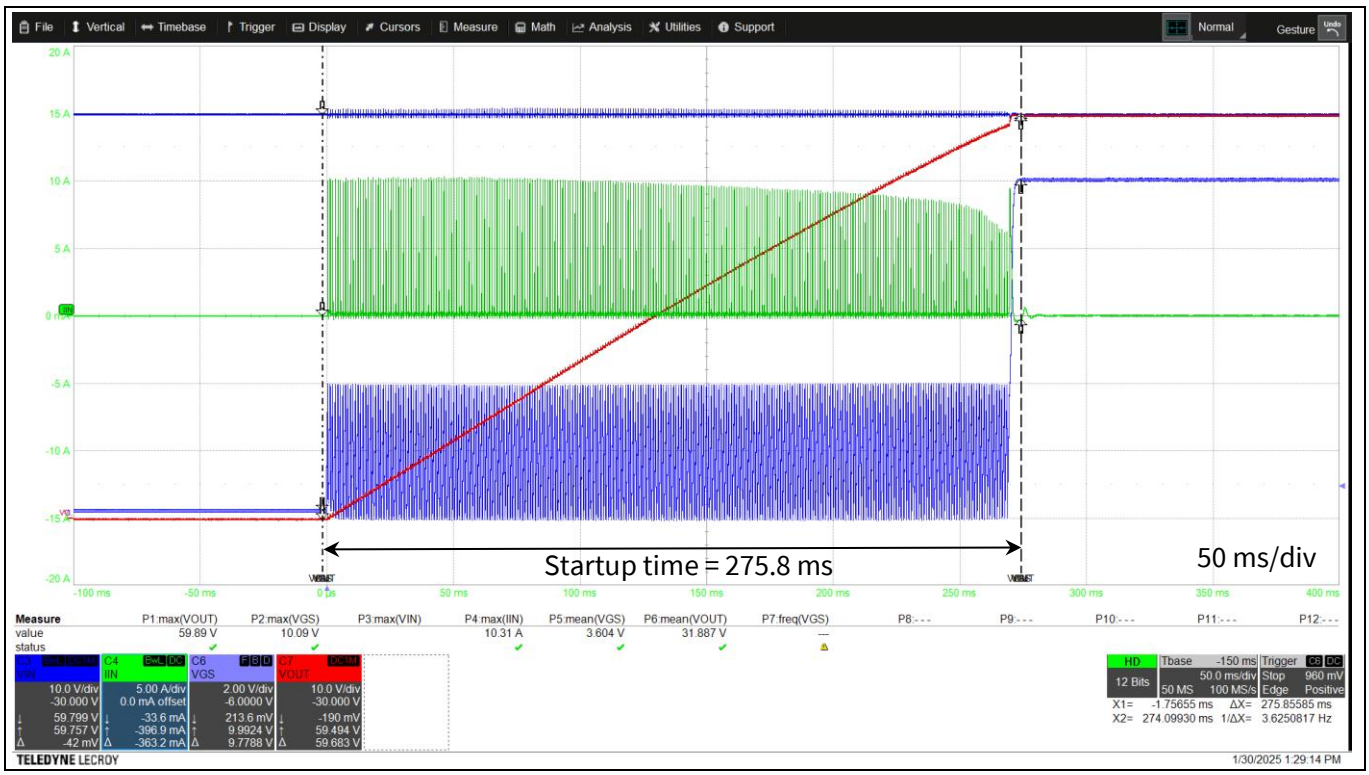

Figure 16 Zoom-out waveforms of a Boost Mode Power Up, with the external circuit for fast switch-off #2. Time: 50 ms/div. C3 (blue): V_{IN} 10 V/div, C4 (green): I_{IN} 5A/div, C6 (light blue): V_{GS} 2 V/div, C7 (red): VOUT 10 V/div

Figure 17 shows the zoom-in waveforms of Boost Mode Power Up with the external circuit for fast switch-off circuit #2. The switch ON and OFF of the gate signal is fast so the frequency of input current I_{IN} and gate voltage V_{GS} is 1 kHz, which meet the system requirements. Similarly, the parasitic inductance of the input cables causes voltage spikes and ringing, which can be eliminated by using shorter cables and input decoupling capacitors.

External fast switch-off circuit in boost mode power-up

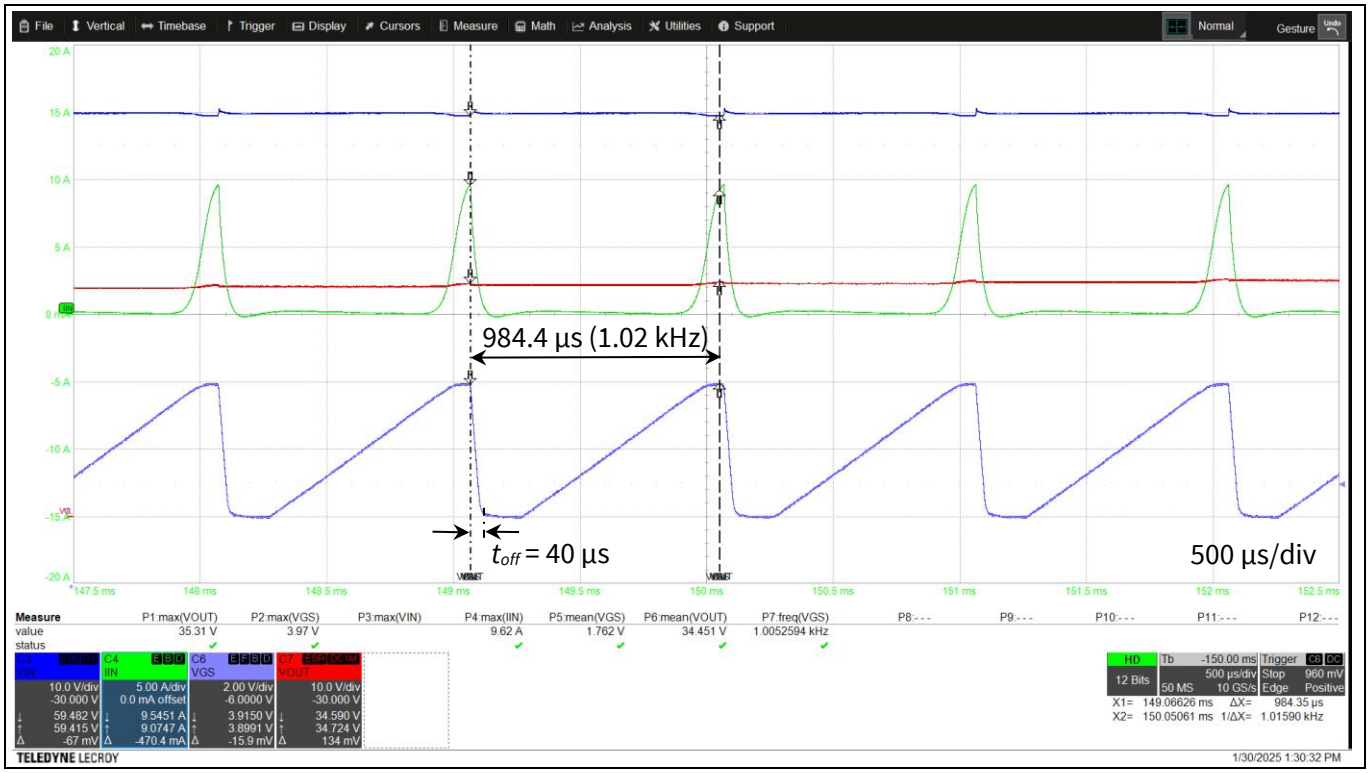

Figure 17 Zoom-in waveforms of fast switch-off at a Boost Mode Power Up, with the external circuit for fast switch-off circuit #2. Time: 500 µs/div. C3 (blue): VIN 10 V/div, C4 (green): I_{IN} 5A/div, C6 (light blue): VGS 2 V/div, C7 (red): VOUT 10 V/div

For comparison, Figure 18 shows the test waveforms at a Boost Mode Power Up without the external circuit for fast switch-off #2, and the slow pull-down current I_{GATE_SPD} is configured to the maximum value of 1250 µA. Double pulses can be observed due to the slower switch-off time of 380 µs and the frequency is also 501 Hz. This behavior of the Boost Mode Power Up is not expected and cannot meet the system requirements. Therefore, the external circuit for fast switch-off #2 works for such situations where faster gate switch-off is required.

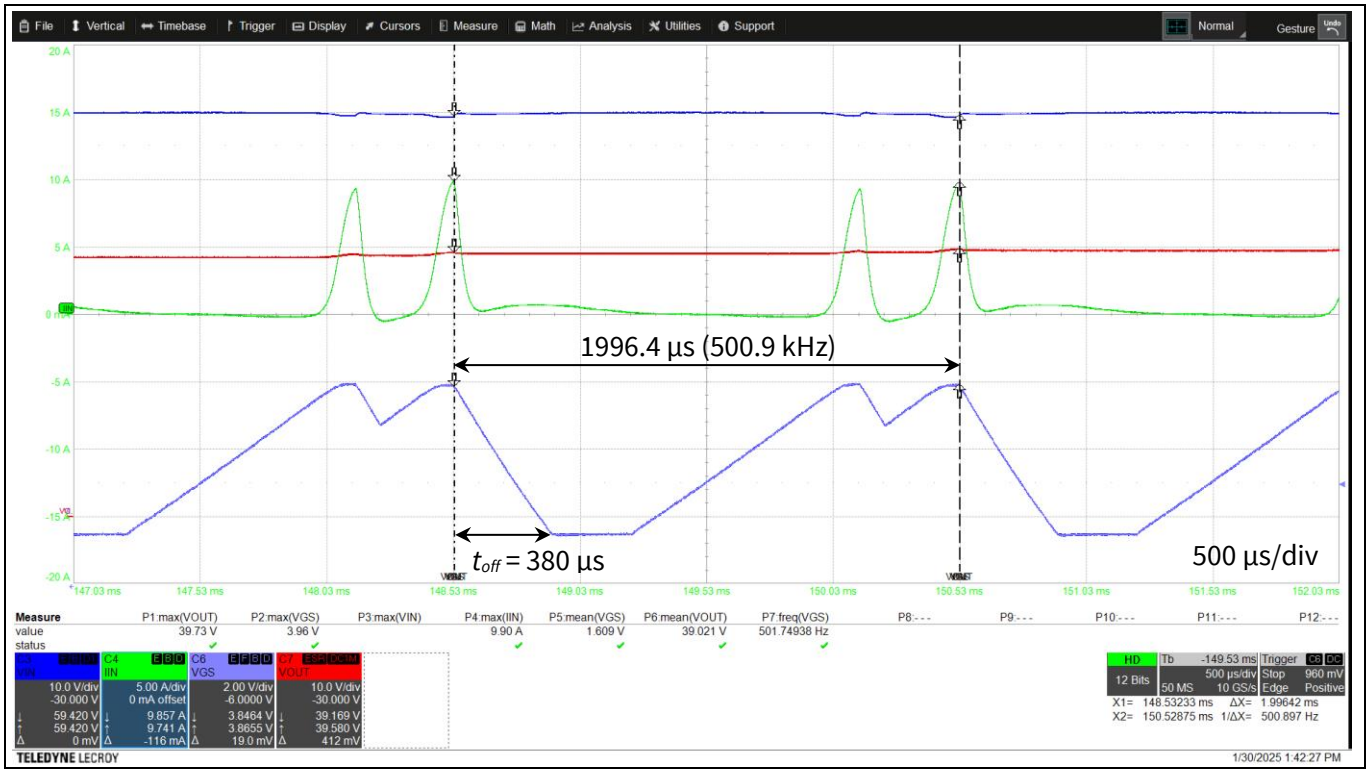

Figure 18 **Zoom-in waveforms of slow switch-off at a Boost Mode Power Up, without the external circuit for fast switch-off #2, GATE_SLOW_PD set to 1250 µA. Double pulses can be observed due to slow switch-off. Time: 500 µs/div. C3 (blue): VIN 10 V/div, C4 (green): IIN 5A/div, C6 (light blue): VGS 2 V/div, C7 (red): VOUT 10 V/div**

5 Summary

Infineon's XDP710-002 is a wide-input voltage hot-swap controller with programmable digital SOA control, ideal for AI servers and telecom infrastructure. In this application note, two fast switch-off circuits have been discussed, and a few user cases have been studied to show how to use the fast switch-off circuit to meet the system requirements.

The following table lists the comparison of two external fast switch-off circuits, enabling users to choose the best suited option based on the system requirements and application-specific considerations.

Table 3 Comparison of two fast switch-off circuit

No.	Item to compare	External circuit for fast switch-off #1	External circuit for fast switch-off #2
1	Gate to source voltage drop at MOSFET on	0 V	0.3 V
2	Control signal	Digital control signals FAULT_N (or FAULT) and EN_N	Analog signal GATE
3	Fast switch off type	Resistor pull-down	Current source

References

[1] Infineon Technologies AG: *AI server hot-plugging with robust hot-swap controllers*; Available online

[2] Infineon Technologies AG: *XDP710-002 Hot-swap Controller datasheet;* Available online

[3] Infineon Technologies AG: *XDP710-002 Hot-swap Controller PMBus Commands, Wide input voltage range (5.5 V to 80 V) system monitoring and protection IC*, *Rev 1.0, 2024-03-14*; Available online

[4] Infineon Technologies AG: *XDP™ XDP710-002 evaluation PCBA user guide*; Available online

[5] Infineon Technologies AG: *IPT017N10NM5LF2 datasheet*; Available online

[6] Infineon Technologies AG: *IPT015N10N5 datasheet*; Available online

[7] Infineon Technologies AG: *XDP™ Designer*; Available online

Revision history

Document revision	Date	Description of changes
V 1.0	2025-04-01	Initial release

Trademarks
All referenced product or service names and trademarks are the property of their respective owners.

Edition 2025-04-01

Published by

Infineon Technologies AG

81726 Munich, Germany

© 2025 Infineon Technologies AG. All Rights Reserved.

Do you have a question about this document?

Email: erratum@infineon.com

Document reference

AN164454

Important notice

The information contained in this application note is given as a hint for the implementation of the product only and shall in no event be regarded as a description or warranty of a certain functionality, condition or quality of the product. Before implementation of the product, the recipient of this application note must verify any function and other technical information given herein in the real application. Infineon Technologies hereby disclaims any and all warranties and liabilities of any kind (including without limitation warranties of non-infringement of intellectual property rights of any third party) with respect to any and all information given in this application note.

The data contained in this document is exclusively intended for technically trained staff. It is the responsibility of customer's technical departments to evaluate the suitability of the product for the intended application and the completeness of the product information given in this document with respect to such application.

Warnings

Due to technical requirements products may contain dangerous substances. For information on the types in question please contact your nearest Infineon Technologies office.

Except as otherwise explicitly approved by Infineon Technologies in a written document signed by authorized representatives of Infineon Technologies, Infineon Technologies' products may not be used in any applications where a failure of the product or any consequences of the use thereof can reasonably be expected to result in personal injury.