XDPL8220 U100 W board description

XDP™ Digital Power

About this document

Scope and purpose

This document contains the specifications, schematics, Bill of Materials (BOM) and measurement results of the 100 W LED driver for LED lighting using the Infineon XDPL8220 dual-stage multi-mode Flyback+PFC combo controller. It also includes a fine-tuning guide and frequently asked questions to ease the process of designing a customized LED driver based on specific project requirements.

Intended audience

This document is intended for anyone wishing to design high-performance dual-stage digital Flyback AC-DC converters for LED lighting based on the PFC+Flyback combo controller XDPL8220.

Table of contents

About this document **1**
Table of contents **1**
1 Introduction **2**
2 Design features **3**
3 Design specifications **4**
4 Schematic and description **6**
4.1 Input stage 7
4.2 PFC stage 8
4.3 Flyback stage 9
4.3.1 Flyback primary side 9
4.3.2 Flyback primary aux side 10
4.3.3 Flyback secondary side 10
4.3.4 Flyback secondary aux side 10
4.4 IC power supply 10
4.5 Dimming stage 11
4.6 Bleeder 12
4.7 External adaptive temperature protection 12
4.8 Programming interface 13
5 PCB layout **14**
6 Performance **15**
6.1 0 to 10 V dimming 18
6.2 0 to 10 V eye-adapted dimming 19
7 BOM **20**
7.1 Transformer specifications 25
8 Configuration set-up and procedures **28**
8.1 XDPL8220 configuration 28
9 References **33**
Revision history **34**

1 Introduction

The XDPL8220 100 W reference design is a digitally configurable LED driver which has universal input of 90 to 305 V AC, wide output load range of 16 to 48 V DC and isolated dimming interface (with CDM10V). Please see the next page for the main design features of this board based on XDPL8220 and CDM10V.

*Note: The 100 W reference design is ready for evaluation without the need for any pre-programming by the user, as the XDPL8220 chip on the PCB has already been burned with the default full set of working parameters. Please connect the AC input, LED output and dimming input as shown in **Figure 1**, for the test set-up.*

Attention: ***If a low DC source with voltage output 0 ~ 10 V is used for the dimming function evaluation at the dimming interface, please switch on DC output first before the XDPL8220 100 W reference board operates (LED engine does not light), or the dimming IC CDM10V (IC201) could be damaged. (The input of the CDM10V should not be higher than the V_{CC} supply voltage.)***

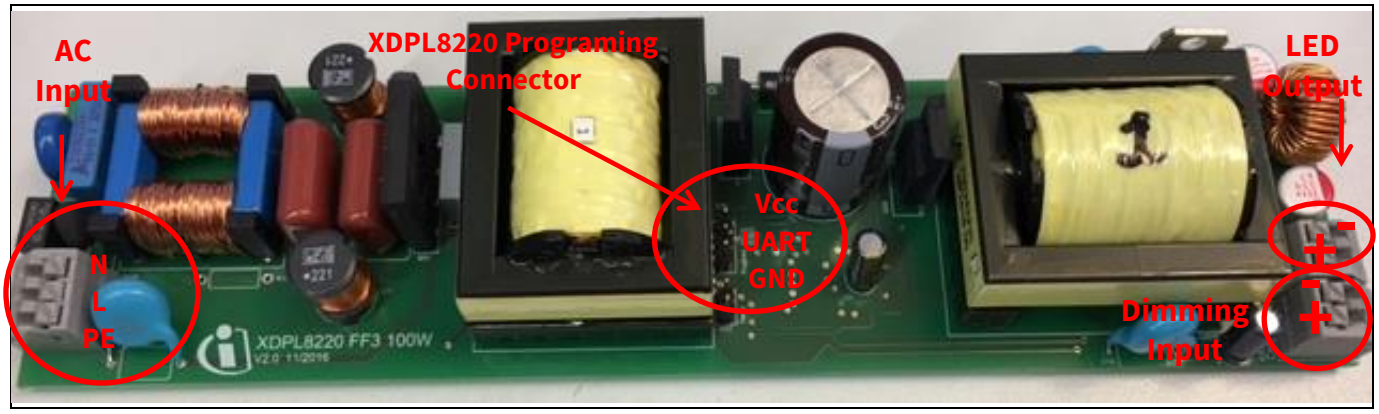

Figure 1 XDPL8220 100 W reference design with isolated dimming interface and configuration connector

2 Design features

- Dual-stage Flyback with Power Factor Correction (PFC) and high-precision primary-side controlled Constant Voltage (CV), Constant Current (CC) and Limited Power (LP) output
- Excellent current accuracy of typically +/-2 percent across universal input voltage range (90 to 305 V AC) and wide output voltage range (from 16 to 48 V)
- Integrated 600 V HV cell and PFC aux winding charge pump power supply for fast start-up time, under 250 ms
- Multi-mode control (QR+DCM) Flyback stage enables high efficiency and low dimming output
- High Power Factor (PF more than 0.9) and low input current Total Harmonic Distortion (iTHD less than 15 percent) across universal input voltage range (90 to 305 V AC) and down to 30 percent load
- Short time-to-light, down to 250 ms
- Low BOM
- Configurable dimming curve to either linear or quadratic (eye-adaptive)
- Configurable minimum dimming current from 10 percent to 5 percent
- Intelligent thermal management with adaptive temperature protection
- Active bleeder for dim-to-off function
- Output-independent forward mode auxiliary power supply for controller
- Isolated dimming interface with CDM10V

Note: *CDM10V is a fully integrated 0 to 10 V dimming interface IC from Infineon which transmits secondary-side analog voltage-based signals from 0 to 10 V dimmer to the primary side, by driving an external optocoupler with a 5 mA current-based PWM signal. For more details about CDM10V, please visit the Infineon website: http://www.infineon.com/cdm10v*

3 Design specifications

Table 1 and Table 2 list the electrical specifications and system protections of this reference design.

Table 1 Electrical specifications

Specification	Symbol	Value	Unit
AC input voltage range	V_{in_AC}	100 ~ 277 (+/-10 percent)	Vrms
DC input voltage range	V_{in_DC}	100 ~ 277 (+/-10 percent)	V
Output LED load range (includes dimming) [1]	V_{LED}	16 ~ 48	V
Non-dimmed full output current setting[2]	I_{out_set}	2500	mA
Total line and load regulation tolerance	–	±2	%
Dimming input voltage range	V_{dim}	0 ~ 10	V
PWM dimming frequency	f_{dim}	500 ~ 1500	Hz
Minimum output current setting[2]	$I_{out_dim_min}$	125	mA
Output current dimming curve[2]	C_{dim}	Linear/quadratic	–
Efficiency (V_{out}: 48 V, I_{out}: 1 A, non-dimming)	η	Less than 89	%
PF (V_{in}: 90 ~ 277 V AC +/-10 percent, V_{out}: 29 ~ 48 V, more than 30 percent load)	PF	More than 0.9	–
iTHD (V_{in}: 90 ~ 277 V AC +/-10 percent, V_{out}: 29 ~ 48 V, more than 30 percent load)	iTHD	Less than 15	%

[1] Configurable in XPDL8220.

[2] Configurable in XPDL8220.

Table 2 System protections

Protection	Symbol	Value	Unit
Nominal input Over-Voltage Protection (OVP) level[1]	V_{in_OV}	320	Vrms
Nominal input Under-Voltage Protection (UVP) level[2]	V_{in_UV}	72	Vrms
Nominal output OVP level[2]	V_{out_OV}	53	V
Nominal output over-current (average) protection level	$I_{out_max_avg}$	2700	mA
IC internal over-temperature detection threshold[2]	$T_{critical}$	119	°C
Input OVP reaction	$Reaction_{_OVP_Vin}$	Latch mode	–
Input UVP reaction	$Reaction_{_UVP_Vin}$	Auto-restart	–
Output over-voltage (output open) protection reaction[3]	$Reaction_{_OVP_Vout}$	Auto-restart	–
Output under-voltage (output short) protection reaction	$Reaction_{_UVP_Vout}$	Auto-restart	–
Output over-current (average) protection reaction	$Reaction_{_Iout_max_avg}$	Auto-restart	–
IC over-temperature protection reaction	$Reaction_{_TP}$	Latch mode	–
Auto-restart idle time[4]	$t_{auto_restart}$	1	s
Fast auto-restart idle time[5]	$t_{fast_auto_restart}$	150	ms

[1] Protection can be disabled and its level can be configured.
[2] Protection cannot be disabled but its level can be configured.
[3] Protection reaction can be configured to either auto-restart or latch mode.
[4] Auto-restart time can be configured.
[5] Auto-restart time can be configured.

4 Schematic and description

Figure 2 shows the complete schematic of the 100 W reference design.

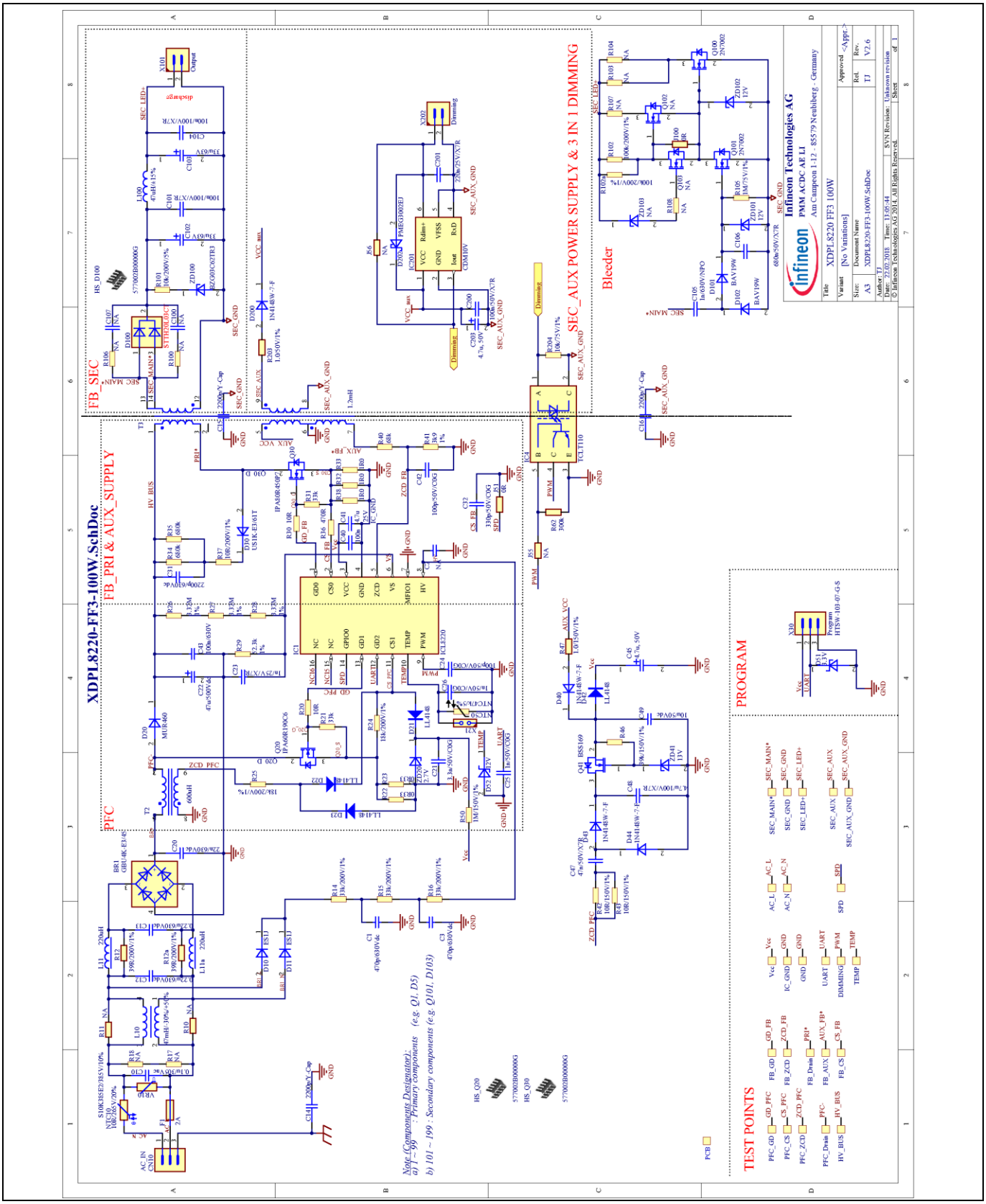

Figure 2 Schematic of the 100 W reference design

The 100 W reference design is made of four main parts: input filter stage, PFC stage, Flyback stage and dimming stage.

4.1 Input stage

Input stage provides the protection not only for the application circuit, but also for the AC net from switching noises. At the same time, it rectifies the AC input to DC for the PFC stage and provides the power for the IC controller before it can be supplied by the application circuit itself.

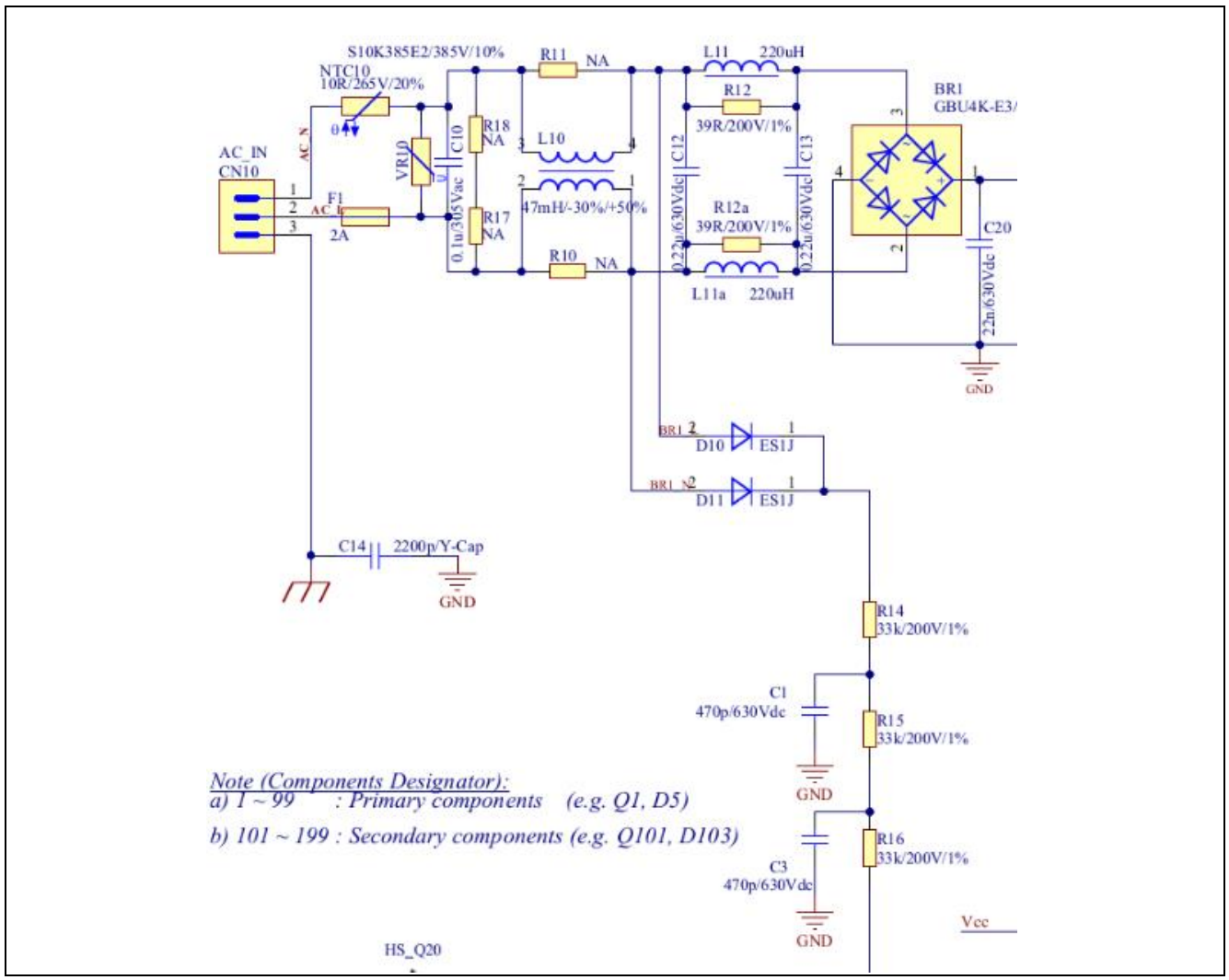

Figure 3 Input stage

It includes the following parts:

1) Negative Temperature Coefficent (NTC) to limit the inrush current, which charges the bus capacitors at AC plug-in
2) Varistor VR10 to protect the primary circuit from AC input over-voltage
3) X-cap discharge resistor R17, R18
4) Common-mode choke to suppress the common-mode noise to the mains
5) Differential filter to suppress the differential-mode noise to the mains
6) Full-bridge rectifier

7) Full-wave AC rectification D10, D11 and current limitation R14, R15, R16 for the IC HV start-up cell via the HV pin to charge the V_{CC} capacitor at cold start-up before PFC and Flyback are running

4.2 PFC stage

The PFC stage boosts the rectified AC voltage to a higher DC voltage with much smaller ripple. Meanwhile, it shapes the input current to comply with the regulatory requirements and reduces the harmonic distortion back to the AC mains.

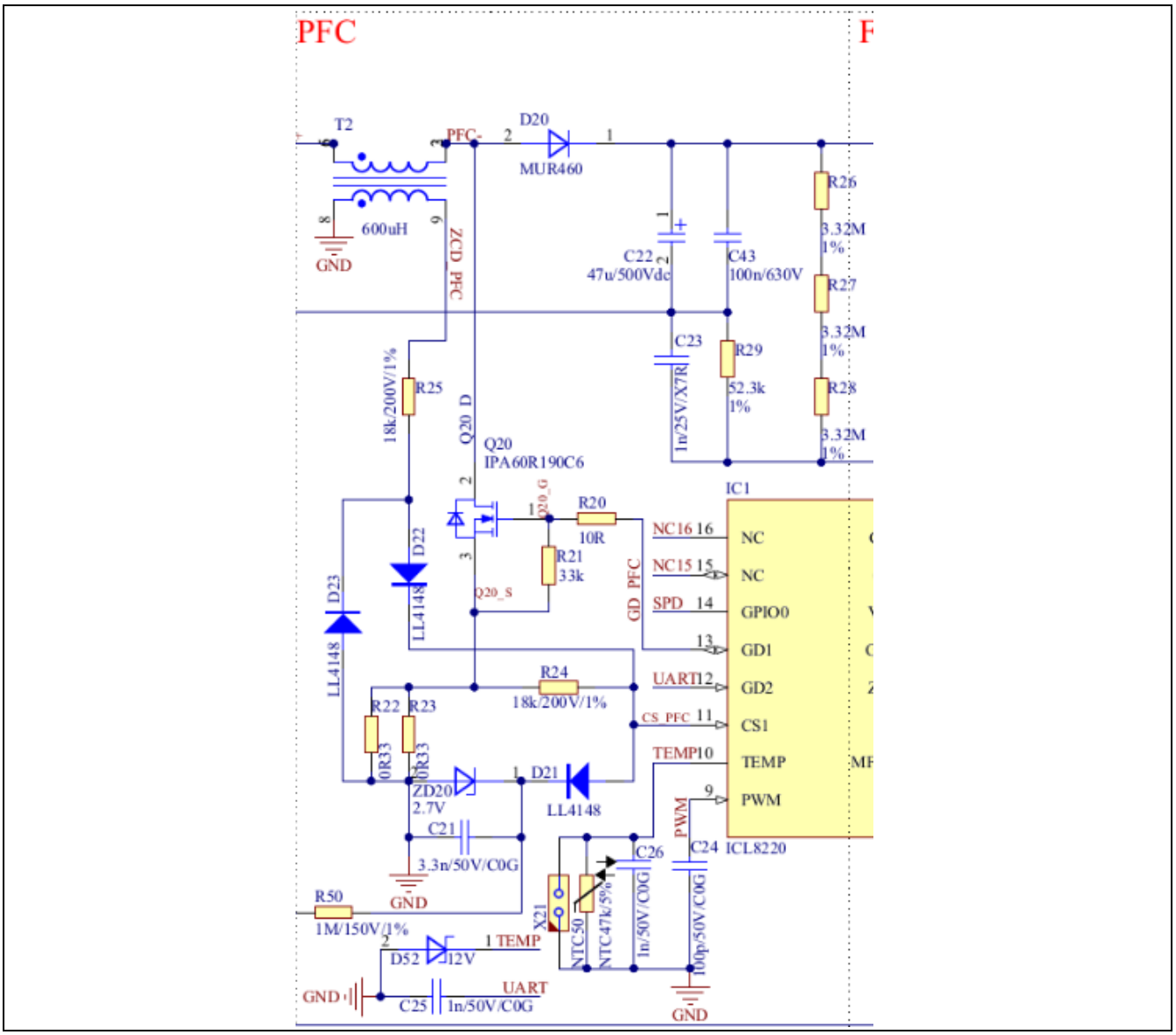

Figure 4 PFC stage

This includes the following parts:

1) Main PFC components with PFC choke T2, PFC power block diode D20 and PFC MOSFET Q20
2) Clamping circuit network for integration of Zero Crossing Detection (ZCD) and Current Sense (CS) for PFC at the same CS pin
3) High-frequency bypass capacitor C43, C46 and DC bus capacitor C22, C22a
4) Bus voltage sensing divider R26, R27, R28, R29 for DC bus voltage regulation

5) Aux winding of the PFC choke for ZCD function and provides the power for the IC at the same time before the Flyback stage is active. Together with charge pump, it reduces the V_{CC} capacitor value so that the charging time for the V_{CC} capacitor through the start-up cell is very short, which enables a very fast time-to-light, around 250 ms at low-line.

4.3 Flyback stage

The Flyback stage converts the boosted DC bus voltage down to a lower DC voltage in a range of 16 to 48 V DC for the LED light engine. It can be split into four parts: primary side, primary aux side, secondary side and secondary aux side:

1) Both output voltage and current are sensed at the primary aux winding and then regulated by the controller XDPL8220.
2) The secondary side provides power for the LED engine with filter and protection functions.
3) The secondary aux winding provides power for the CDM10V, which enables the dimming function.
4) The primary aux winding provides the power for the controller XDPL8220 after the Flyback stage is active.

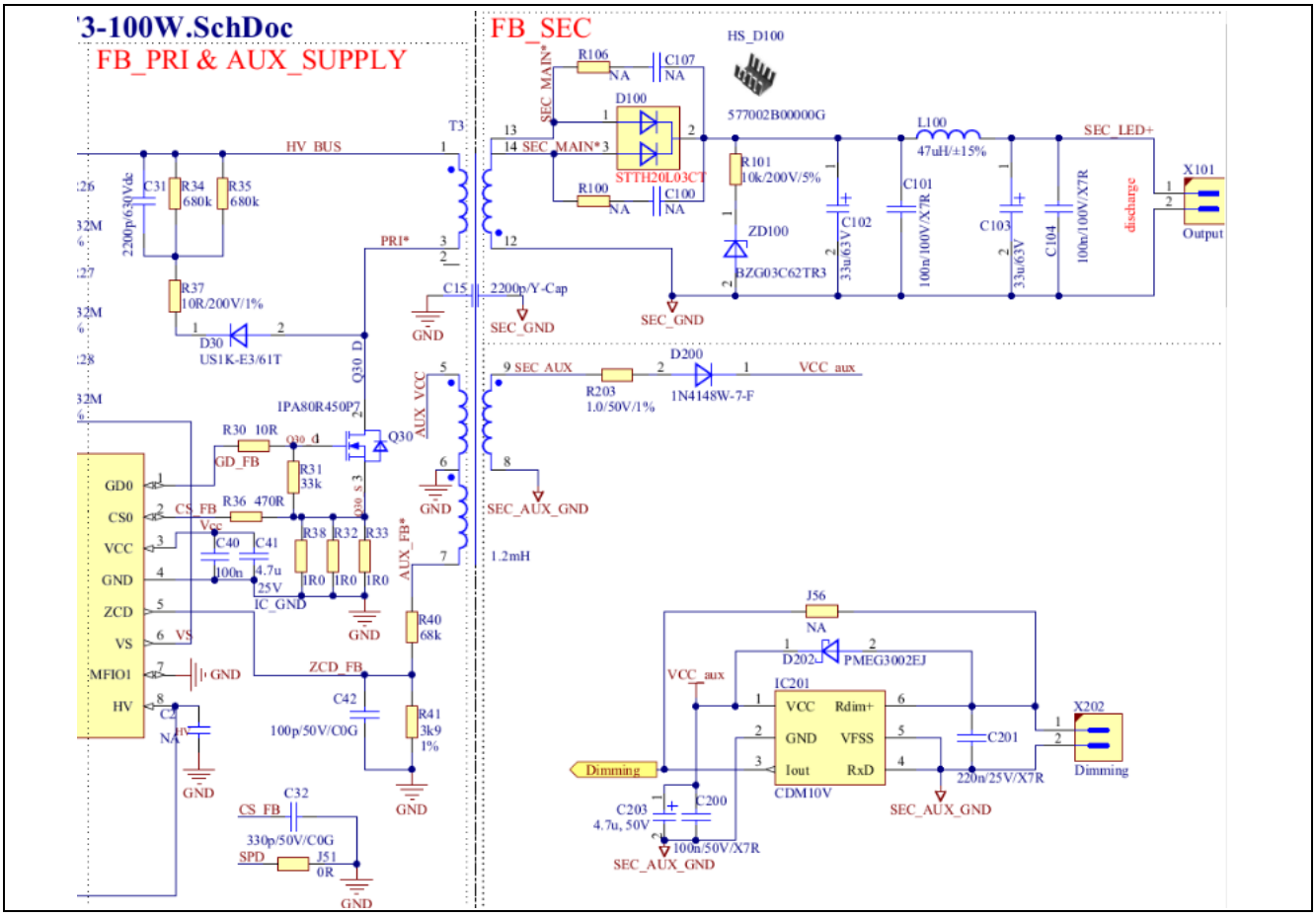

Figure 5 Flyback stage

4.3.1 Flyback primary side

The Flyback primary side includes the following parts:

1) The regulated power to the secondary side is controlled through the transformer T3 by switching of the power MOSFET Q30.

2) The snubber network suppresses the oscillation in the Flyback main power path while the MOSFET Q30 turns off.
3) Current shunt resistors R32 and R33.

4.3.2 Flyback primary aux side

The Flyback primary aux side includes the following parts:

1) ZCD divider R40 and R41 for the ZCD function, which enables valley switching.
2) The forward mode power supply for the controller XDPL8220. This makes the V_{CC} power supply independent from the wide output voltage range and a regulator is not required.

4.3.3 Flyback secondary side

The Flyback primary aux side includes the following parts:

1) Rectifier D100 with snubber network R100 and C100.
2) R101 and ZD100 protect the output from over-voltage.
3) PI filter network suppresses the output noise.

4.3.4 Flyback secondary aux side

The dimming controller CDM10V is supplied by forward mode at the secondary aux winding. This makes the power supply independent from the wide output voltage range and a regulator is not necessary.

4.4 IC power supply

The IC power supply comprises three parts, as shown in **Figure 6**.

- After the AC-DC input is plugged in and before XDPL8220 is active, the IC has power supplied by the depletion cell, which is connected to the input via the HV pin. V_{CC} capacitors are charged until the voltage reaches around 20.5 V. After the XDPL8220 is active, there is no power supply until the PFC stage is active, so the V_{CC} will drop during this period. It is important to design the V_{CC} capacitors properly so that the V_{CC} voltage does not drop below the under-voltage threshold.
- When the PFC stage is active, XDPL8220 has its power supplied from the PFC aux winding through the charge pump consisting of R42, C47, D44 and D43. The advantage of the PFC aux winding supply with charge pump is that the V_{CC} capacitors don't need to be designed to be as large, so that V_{CC} should be held above under-voltage threshold until the Flyback stage is active. This helps to achieve a fast time-to-light at the low-line condition.
- After the bus voltage reaches the defined threshold at which the Flyback stage is active, the power supply for XDPL8220 is then taken over by the Flyback aux winding in forward mode.

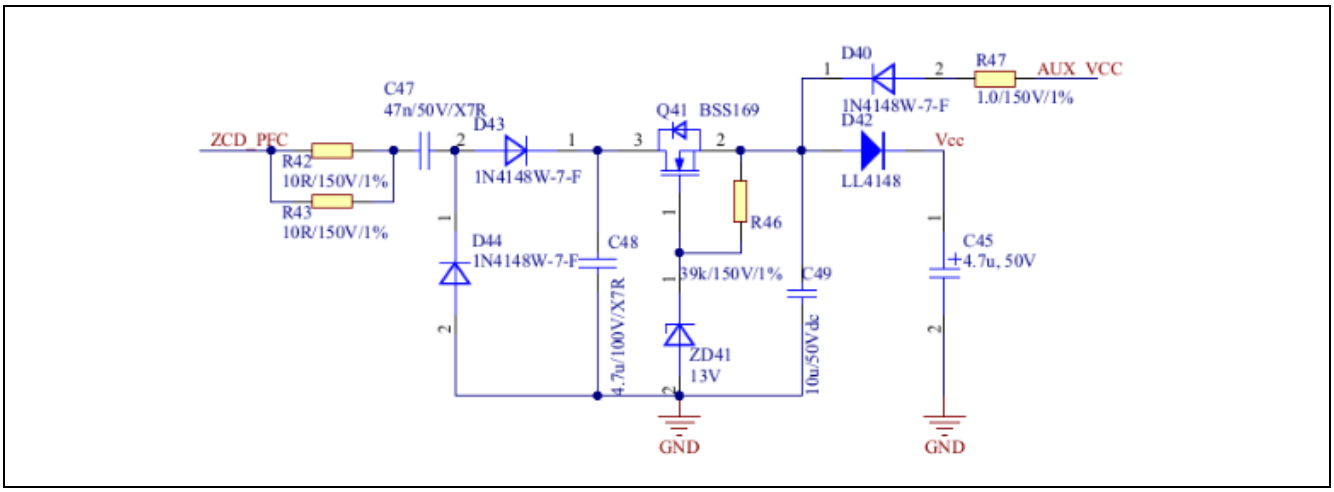

Figure 6 Forward mode V_{cc} power supply

4.5 Dimming stage

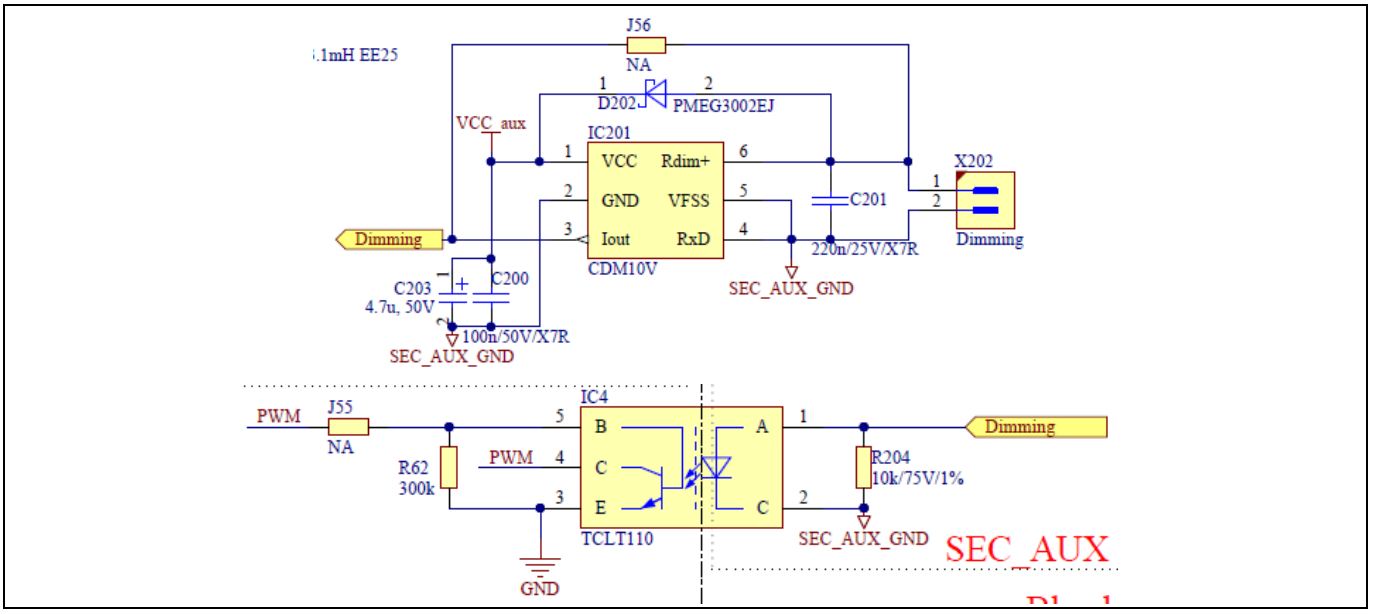

Figure 7 Dimming stage

The dimming stage is controlled by the CDM10V, as shown in **Figure 7**. This controller enables isolated dimming function:

1) The PWM dimming signal can be directly supplied at the connector X202, or
2) An analog 0 to 10 V/1 to 10 V dimmer can be connected directly at X202 and sink current is supplied by the CDM10V.
3) An optocoupler is needed for communication from the secondary side by CDM10V to the primary side to XDPL8220.
4) Resistor R204 provides bypass for the leakage current out of CDM10V.
5) Resistor R62 ensures fast turn-off of the optocoupler.

4.6 Bleeder

The bleeder block as shown in Figure 8 is used to discharge the LED output capacitors in the following conditions:

1) Fast auto-restart mode: in the dim-to-off condition, XDPL8220 enters the fast auto-restart mode and output voltage is discharged to around 12 V and stabilized there so the LED engine will not light.
2) Auto-restart mode: if XDPL8220 enters protection mode, any output will be periodically discharged so that the output voltage will not exceed the output over-voltage protection level.
3) Latch mode: if XDPL8220 enters latch mode due to certain critical failure, the output voltage will be completely discharged.
4) Input unplugged: if the AC-DC input power supply is unplugged, the output voltage will be completely discharged.

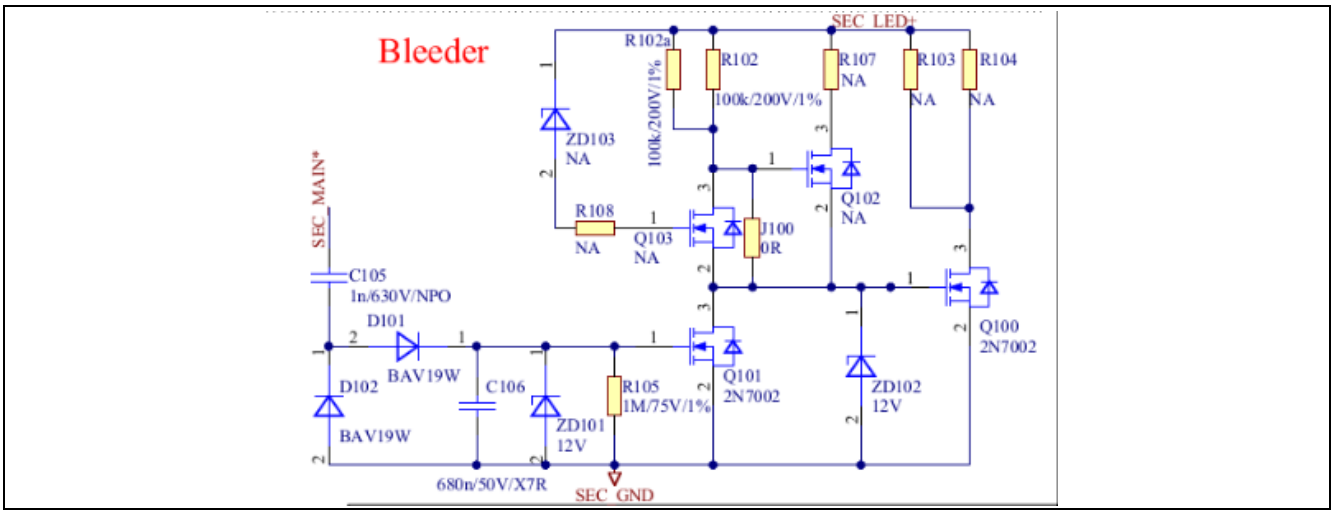

Figure 8 Active bleeder

This includes the following parts:

1) Charge pump C105, D102, D101 charges the C106 every switching cycle until it stabilizes at 12 V.
2) ZD101 clamps the voltage at C106 not higher than 12 V.
3) Passive bleeder resistor R102 discharges the LED output slowly.
4) Active bleeder resistors R103 and R104 discharge the LED output only when C106 is not charged any more and discharged by R105, and Q101 switches off.
5) Q101 is on as long as the Flyback stage is in normal operation so that Q100 is switched off.
6) At any time, if the Flyback stage stops operation, Q101 is turned off and Q100 is on, output is discharged through R103, R104 and Q100.

4.7 External adaptive temperature protection

The external adaptive temperature protection function is realized by connecting an external NTC resistor to the TEMP pin of XDPL8220. This NTC resistor is usually located near the LED engine so that it can be protected from over-temperature. The controller XDPL8220 senses the NTC resistor value change caused by the temperature variation and regulates the output current for the LED engine according to its temperature.

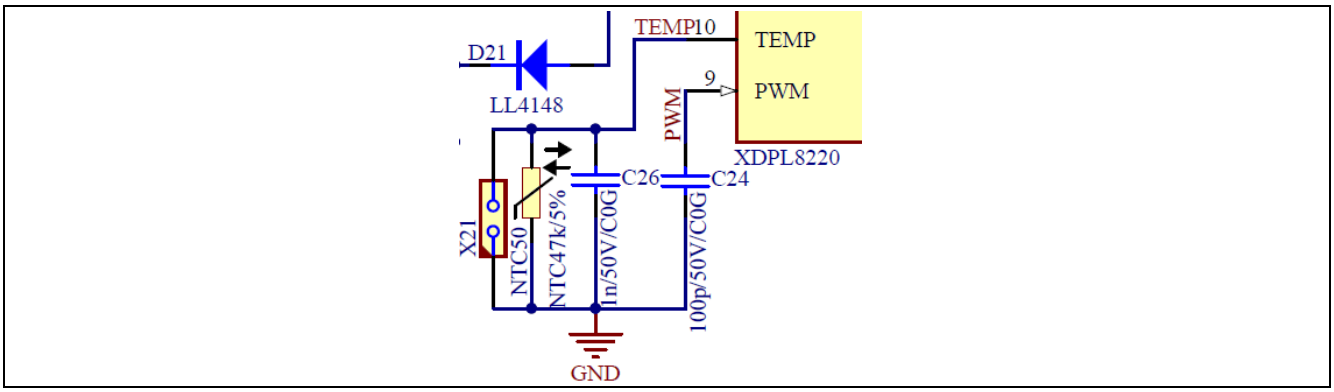

Figure 9 External NTC connection

4.8 Programming interface

The programming interface is at the connector X30. This interface is necessary for configuration of the application-related parameters through the hardware .dp Interface Gen2 and the software .dpVision.

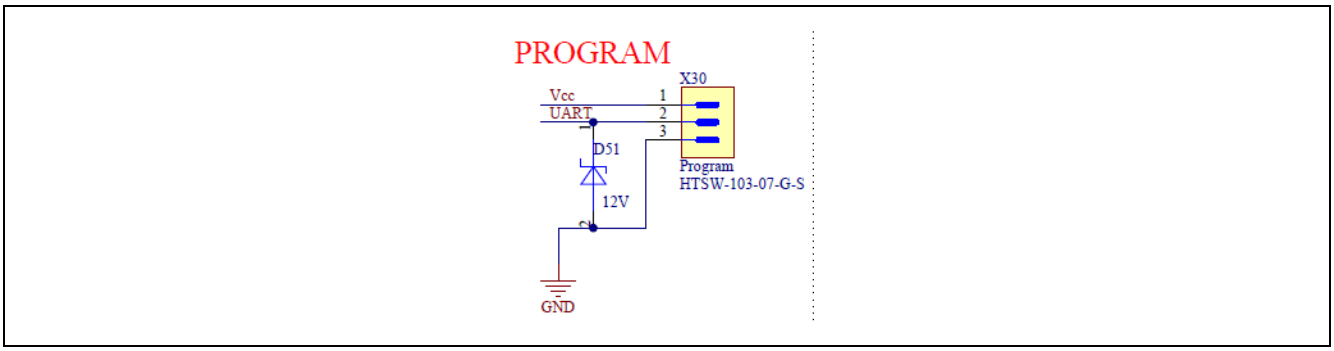

Figure 10 Programming interface

5 PCB layout

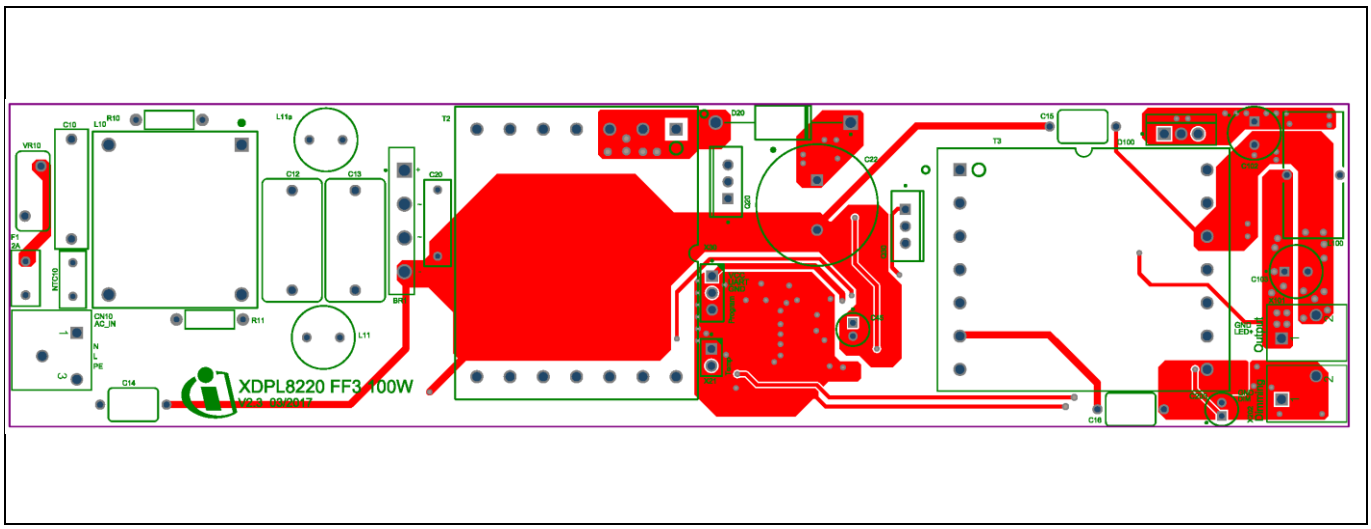

Figure 11 PCB top

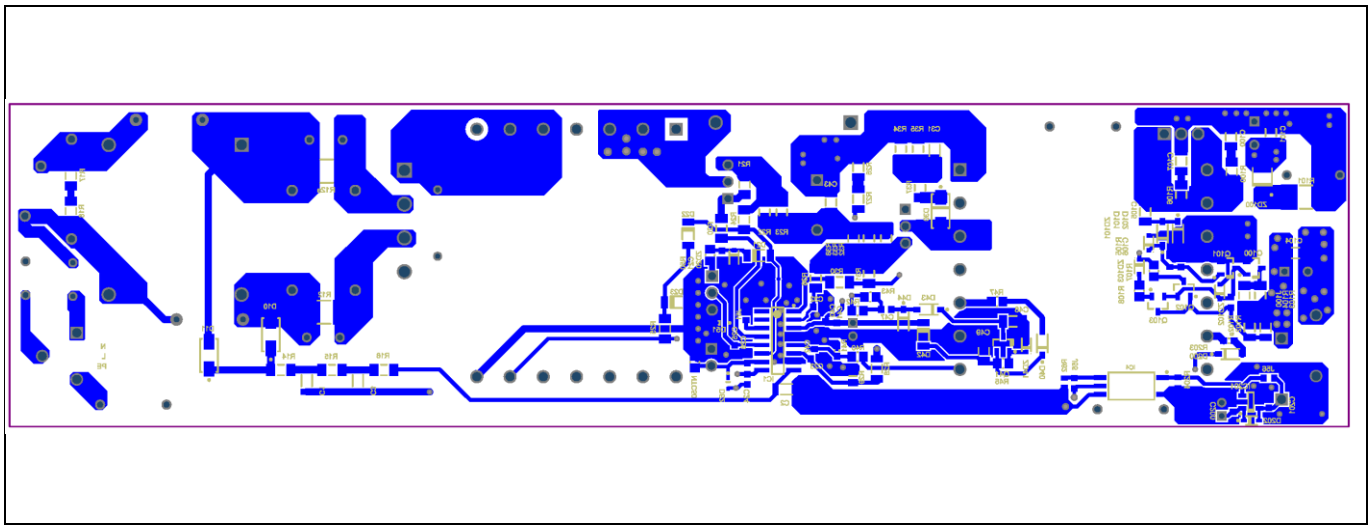

Figure 12 PCB bottom

6 Performance

Table 3 Measurement results with five LEDs

V_{in} (V AC)	P_{in} (W)	V_{out} (V)	I_{out} (A)	Ripple (PK) (mA)	PF	THD (%)	η (%)
120	52	16.83	2.49 (100 percent)	63.7	0.993	9.98	80.8
140	51.5	16.80	2.49	63.4	0.993	8.32	81.3
200	50.9	16.75	2.49	63.8	0.983	6.12	82.2
220	50.8	16.73	2.49	64.0	0.977	5.98	82.3
230	50.6	16.71	2.49 (100 percent)	64.3	0.973	5.8	82.4
240	50.6	16.69	2.49	64.0	0.969	5.83	82.36
264	50.4	16.67	2.49	64.4	0.956	5.1	82.7
277	50.34	16.65	2.49 (100 percent)	64.8	0.948	5.2	82.6

Table 4 Measurement results with 10 LEDs

V_{in} (V AC)	P_{in} (W)	V_{out} (V)	I_{out} (A)	Ripple (PK) (mA)	PF	THD (%)	η (%)
120	95.9	32.72	2.49 (100 percent)	44.2	0.997	7.3	82.7
	47.3	30.8	1.25 (50 percent)	56.2	0.994	8.1	82.2
140	97.4	32.76	2.49	44.3	0.996	7.9	84.2
200	95.6	32.79	2.49	44.0	0.994	5.7	85.8
220	95.6	32.83	2.5	43.9	0.992	4.7	85.9
230	95.6	32.87	2.50 (100 percent)	43.5	0.991	4.6	86.1
	46.3	30.8	1.26 (50 percent)	59.3	0.967	6.2	84.1
240	95.5	32.95	2.50	43.8	0.990	4.5	86.2
264	95.6	33.01	2.50	43.6	0.986	4.6	86.5
277	95.9	33.16	2.50	43.3	0.983	4.7	86.6

Vin (V AC)	Pin (W)	Vout (V)	Iout (A)	Ripple (PK) (mA)	PF	THD (%)	η (%)
			(100 percent)				
	46.3	30.7	1.27 (50 percent)	58.4	0.937	5.6	84.3

Table 5 Measurement results with 14 LEDs

Vin (V AC)	Pin (W)	Vout (V)	Iout (A)	Ripple (PK) (mA)	PF	THD (%)	η (%)
120	120.2	45.31	2.20 (100 percent)	42.8	0.997	6.8	83.9
	56.3	42.15	1.10 (50 percent)	55.9	0.993	9.8	82.9
	28.3	40.02	0.56 (25 percent)	26.3	0.987	11.1	80.2
140	117.8	45.15	2.20	42.7	0.996	7.4	84.8
200	114.9	45.02	2.21	42.9	0.995	5.5	86.7
220	114.5	44.87	2.22	43.1	0.994	5.3	87.1
230	114.3	44.82	2.22 (100 percent)	43.2	0.993	5.2	87.3
	54.9	42.23	1.10 (50 percent)	56.1	0.977	5.8	85.1
	27.9	40.07	0.56 (25 percent)	26.7	0.924	6.6	81.0 percent
240	114.2	44.73	2.22	43.1	0.992	5.2	87.3
265	114.0	44.69	2.23	43.1	0.989	4.4	87.5
277	113.7	44.63	2.23 (100 percent)	43.0	0.984	4.6	87.6
	54.3	42.26	1.12 (50 percent)	43.8	0.956	5.2	85.6
	27.0	39.21	0.57 (25 percent)	27.2	0.867	7.5	81.2

Note: Due to the LP mode, the current is limited so that the output power does not exceed the defined 100 W.

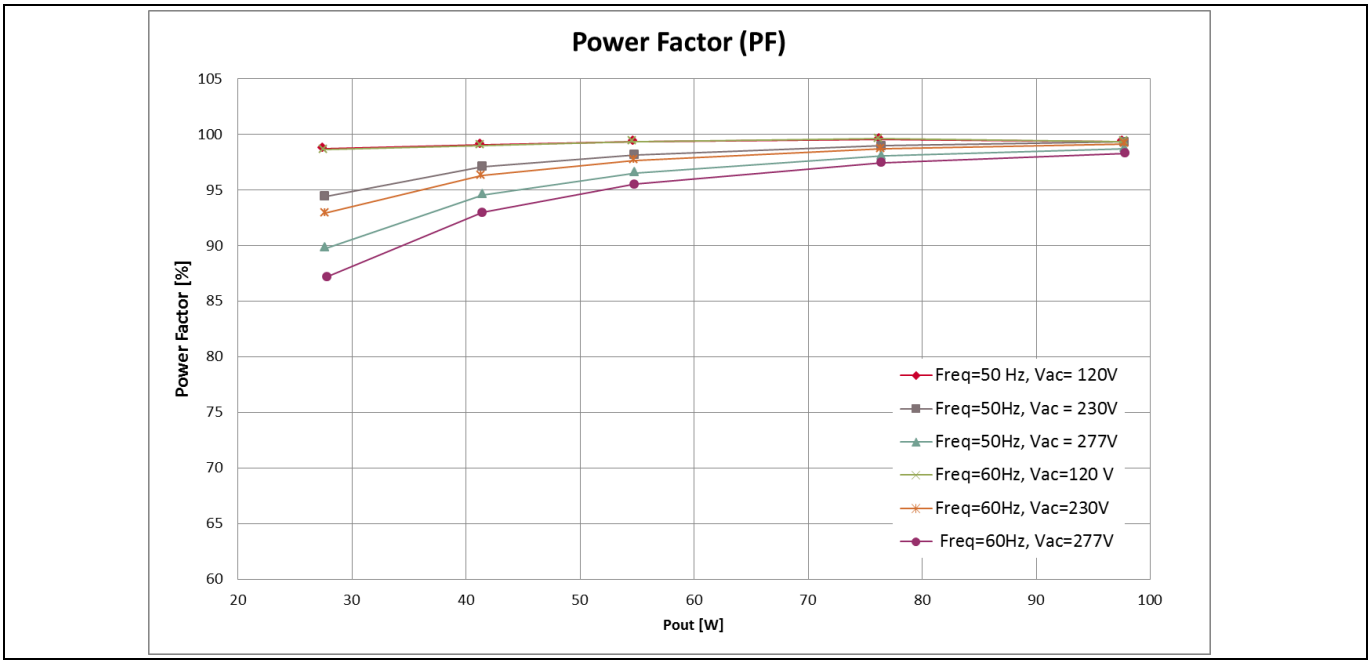

Figure 13 XDPL8221 100 W reference board PF with 13 LEDs

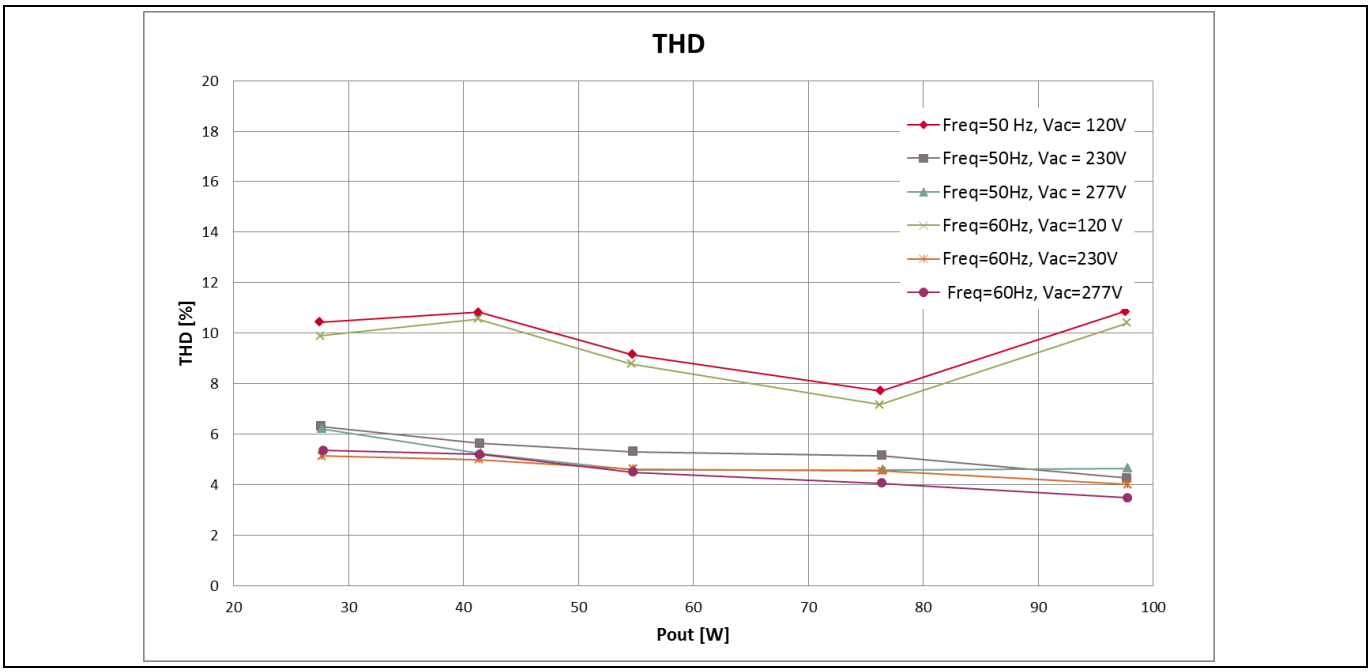

Figure 14 XDPL8221 100 W reference board THD with 13 LEDs

Note: Due to the limited power mode, the current is limited so that the output power does not exceed the defined 100 W.

6.1 0 to 10 V dimming

This section provides measurement results for the 0 to 10 V dimming feature. A linear curve was configured for this measurement using the .dpVision GUI. The measurement was done for an input voltage of 230 V AC, 50 Hz and an output load of 14 LEDs.

Table 6 Output current at different dimming voltages with 14 LEDs

V_{dim} (V)	**0.50**	**1.00**	**1.50**	**2.00**	**2.50**	**3.00**	**3.50**	**4.00**	**4.50**	**5.00**
I_{out} (A)	0.125	0.125	0.125	0.25	0.39	0.59	0.75	0.91	1.08	1.23
V_{dim} (V)	**5.50**	**6.00**	**6.50**	**7.00**	**7.50**	**8.00**	**8.50**	**9.00**	**9.50**	**10.00**
I_{out} (A)	1.37	1.53	1.67	1.80	1.93	2.07	2.19	2.21	2.21	2.21

Note: Due to the LP mode, the current is limited so that the output power does not exceed the defined 100 W.

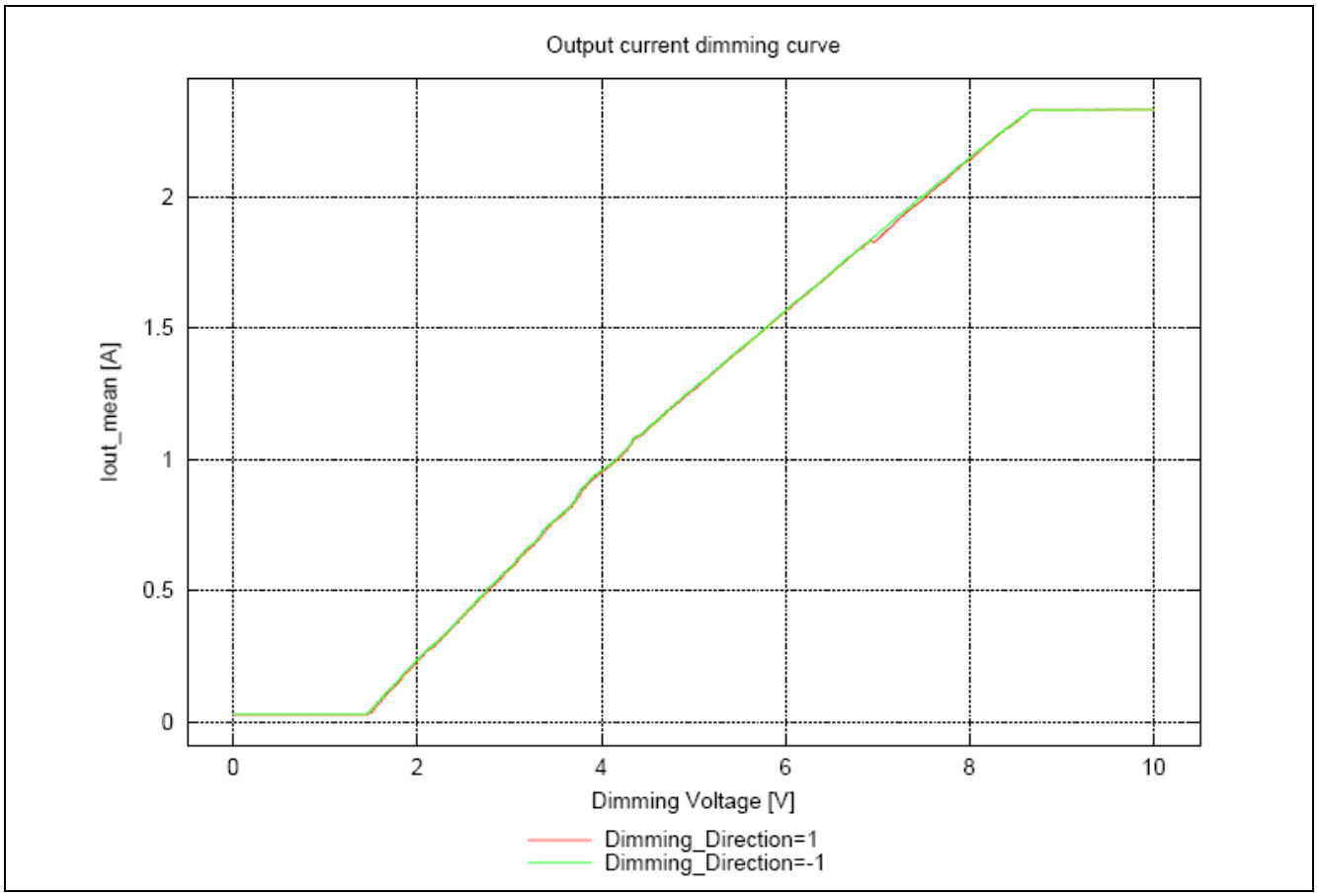

Figure 15 XDPL8220 100 W reference board linear dimming curve with V AC = 230 V/50 Hz, 13 LEDs

6.2 0 to 10 V eye-adapted dimming

This section provides measurement results for the 0 to 10 V dimming feature with an eye-adapted (quadratic) curve. The measurement was done for an input voltage of 230 V AC, 50 Hz and an output load of 14 LEDs (48 V at maximum limited current).

Table 7 Output current at different dimming voltages

V_{dim} (V)	**0.50**	**1.00**	**1.50**	**2.00**	**2.50**	**3.00**	**3.50**	**4.00**	**4.50**	**5.00**
I_{out} (A)	0.125	0.125	0.125	0.125	0.125	0.143	0.254	0.354	0.490	0.654
V_{dim} (V)	**5.50**	**6.00**	**6.50**	**7.00**	**7.50**	**8.00**	**8.50**	**9.00**	**9.50**	**10.00**
I_{out} (A)	0.831	1.02	1.23	1.42	1.67	1.90	2.17	2.21	2.21	2.21

Note: Due to the LP mode, the current is limited so that the output power does not exceed the defined 100 W.

7 BOM

Table 8 XDPL8221 100 W reference board BOM

Quantity	Designator	Value	Description	Manufacturer	Part number
1	BR1	GBU4K-E3/45	4 A, 800 V, SIP4	Diodes	GBU4K-E3/45
2	C1, C3	470 p	Cap-1206-470p/630 V/5 percent/C0G	TDK	C3216C0G2J471J085AA
1	C10	0.1 µ	EMI cap 100 n/305 V/X2/10 percent	TDK	B32922C3104K
2	C12, C13	0.22 µ	Metallized polyester film capacitor	Panasonic	ECQE6224JF
3	C14, C15, C16	2200 p/Y-cap	Y-cap 2200 pF/250 V/pitch 10	Murata	DE1E3KX222MA5B
1	C20	22 n	MKT, 22 nF/630 V/±10 percent, 15 mm, 4 x 12.5 mm	Vishay	BFC237261223
1	C21	3.3 n	Cap-0603-3.3 n/50 V/0.01/C0G	Kemet	C0603C332J5GACTU
1	C22	47 µ	Miniature aluminum electrolytic capacitor	Rubycon	500BXC47MEFC18X31.5
1	C23	1 n	Cap-0603-1 n/25 V/0.1/X7R	AVX	06033C102K4Z2A
2	C24, C42	100 p	Cap-0603-100p/50 V/0.1/C0G	AVX	06035A101FAT2A
2	C25, C26	1 n	Cap-0603-1n/50 V/0.01/C0G	Murata	GRM1885C1H102F
1	C31	2200 p	Cap-1206-2200p/630 V/10 percent/X7R	Murata	GRM31BR72J222KW01L
1	C32	330 p	Cap-0603-330p/50 V/0.01/C0G	Kemet	C0603C331F5GAC
2	C40, C200	100 n	Cap-0603-100n/50 V/0.1/X7R	AVX	06035C104K4Z2A
1	C41	4.7 µ	Cap-0603-4.7u/25V/10 percent/X5R	Murata	GRM188R61E475KE11D
1	C43	0.10 µ	Cap-1210-100n/630 V/10 percent/X7T	TDK	CGA6L1X7T2J104K160AC
2	C45, C203	4.7 µ	Al cap 4.7 µF/50 V/pitch 2 mm	Panasonic	EEUFC1H4R7
1	C47	47n	Cap-0603-47n/50 V/0.1/X7R	Murata	GRM188R71H473KA61D
1	C48	4.7 u	Cap-1206-4.7u/100 V/0.1/X7S	AVX	12061Z475KAT2A
1	C49	10 µ	Cap-1206-10u/50 V/10 percent/X5R	Murata	GRM31CR61H106KA12#

BOM

Quantity	Designator	Value	Description	Manufacturer	Part number
2	C101, C104	100 n	Cap-1206-100n/100 V/0.1/X7R	TDK	C3216X7R2A104K160AA
2	C102, C103	33 µ	Al cap 33 µF/63 V/pitch 3.5/DxH8,00 x 12.00 mm	Nichicon	RNU1J330MDN1KX
1	C105	1 n	Cap-1206-1n/630 V/0.5/NPO	TDK	CGA5F4C0G2J102J085AA
1	C106	680 n	Cap-0603-680n/50 V/0.1/X5R	TDK	C1608X5R1H684K080AB
1	C201	220 n	Cap-0603-220 n/25 V/0.2/X7R	Kemet	C0603C224K3RACTU
1	CN10	691412120003MB	7.92 mm contact pitch, right-angle header	Würth Electronik	691412120003MB
2	D10, D11	ES1J	Ultra-fast diode 600 V/1 A/DO-214AC	Fairchild Semiconductor	ES1J
1	D20	MUR460	Ultra-fast switch mode power rectifier 4.0 A/600 Vrrm	ON Semiconductor	MUR460G
3	D21, D22, D23	LL4148	Small-signal diode/100 V	Fairchild Semiconductor	LL4148
1	D30	US1K-E3/61T	Ultra-fast diode 800 V/1.0 A/DO-214AC	Vishay General Semiconductor	US1K-E3/61T
4	D40, D43, D44, D200	1N4148W-7-F	Surface-mount fast-switching diode	Diodes Incorporated	1N4148W-7-F
1	D42	LL4148	Diode 100 V, 200 mA, SOD80 (Melf)	Fairchild Semiconductor	LL4148
1	D51	PESD3V3S1UB	Unidirectional ESD protection diode/3.3 V	NXP	PESD3V3S1UB
1	D52	PESD12VS1UB	Unidirectional ESD protection diode/12 V	NXP	PESD12VS1UB
1	D100	STTH20L03CT	Dual diode, TO220AB, 100 V, CC	ST	STTH20L03CT
2	D101, D102	BAV19W	Diode 100 V, 400mA, SOD123	Diodes Inc.	BAV19W
1	D202	PMEG3002EJ	Schottky diode/30 V, 200 mA, SOD323	NXP	PMEG3002EJ
1	F1	2 A	Radial lead fuse rectangular – slow blow, 2 A, 250 V	Multicomp	MST 2A 250 V
3	HS_D100, HS_Q20, HS_Q30	577002B00000G	Slim low-cost channel-style heatsink	Aavid Thermalloy	577002B00000G
1	IC1	ICL8220	LED combo control IC for PFC and FB	Infineon Technologies	ICL8220B13

BOM

Quantity	Designator	Value	Description	Manufacturer	Part number
			conversion		
1	IC4	TCLT110	Optocoupler, phototransistor output, CTR 100 percent to 200 percent at 10 mA (operating temp. -55°C to 100°C)	Vishay	TCLT1103
1	IC201	CDM10V	Dimming interface IC SOT-23-6	Infineon Technologies	CDM10V
2	J51, J100	0 R	0 R/50 V	Bourns	CR0603-J/-000ELF
1	L10	47 mH	Current-compensated frame-core double choke	Epcos	B82733F2112B001
2	L11, L11a	220 µH	IND 220 µH, 1.6 ARMS, 0R26, pitch 5 mm, 13 x 10 x 15 mm	Würth Elektronik	7447480221
1	L100	47 µH	Tor-choke 47 µH/3.6 A/15 percent	Bourns JW Miller	2109-H-RC
1	NTC10	10 R	10 R/265 V/20 percent	Epcos	B57235S0100M0
1	NTC50	NTC47k	NTC47k/5 percent/0805	Epcos	B57471V2473J062
1	PCB	PCB	PCB, 201.5 x 48.5 mm, two-layer, 35 µm, FR4, 1.55 mm standard, solder mask green both sides, silkscreen white both sides		
1	Q20	IPA60R190C6	650 V CoolMOS™ C6, 0.19 Ω, TO220FP	Infineon Technologies	IPA60R190C6
1	Q30	IPA80R450P7	800 V CoolMOS™ P7, 0.45 Ω, TO220FP	Infineon Technologies	IPA80R450P7
1	Q41	BSS169	MOSFET N-Ch, 100 V, 90 mA, 12 Ω, SOT23	Infineon Technologies	BSS169
2	Q100, Q101	2N7002	OptiMOS transistor 60 V, 3 Ω, 300 mA, SOT23	Infineon Technologies	2N7002
2	R12, R12a	39 R	39 R/200 V/1 percent	TE Connectivity	352039RJT
5	R14, R15, R16, R21, R31	33 k	33 k/200 V/1 percent	Yageo/Phycomp	RC1206FR-0733K
2	R17, R18	1 M	1 M/200 V/1 percent	Yageo/Phycomp	RC1206FR-071M0L
3	R20, R30, R37	10 R	10 R/200 V/1	Yageo/Phycomp	RC1206FR-7W10R

BOM

Quantity	Designator	Value	Description	Manufacturer	Part number
			percent		
2	R22, R23	0R33	0.33/675 mV/1 percent	Bourns	CRM1206-FX-R330 E LF
2	R24, R25	18 k	18 k/200 V/1 percent	Yageo/Phycomp	RC1206FR-0718K
3	R26, R27, R28	3.32 M	3.32 M/200 V/1 percent	Vishay	CRCW12063M32FKEA
1	R29	52.3 k	52.3 k/150 V/1 percent	Panasonic	ERJP06F5232V
3	R32, R33, R38	1R0	1.0 R/200 V/1 percent	Panasonic	ERJ8BQF1R0V
2	R34, R35	680 k	680 k/200 V/1 percent	Yageo/Phycomp	RC1206FR-07680K
1	R36	470 R	470 R/200 V/1 percent	Yageo/Phycomp	RC1206FR-07470R
1	R40	68 k	68 k/150 V/1 percent	Yageo/Phycomp	RC0805FR-0768KL
1	R41	3k9	3.9 k/50 V/1 percent	Yageo/Phycomp	RC0603FR-073K9L
2	R42, R43	10 R	10 R/150 V/330 mW/1 percent	TE Connectivity	CRGH0805F10R
1	R46	39 k	39 k/150 V/1 percent	Yageo/Phycomp	RC0805FR-0739KL
1	R47	1.0	1.0/150 V/1 percent	Yageo/Phycomp	RC0805FR-071RL
1	R50	1 M	1 M/150 V/1 percent	Yageo/Phycomp	RC0805FR-071M
1	R62	300 k	300 k/75 V/1 percent	Vishay	CRCW0603300KFKED
1	R101	10 k	10 k/200 V/5 percent/2512	Yageo	RC2512JK-0710KL
2	R102, R105	1 M	1 M/75 V/1 percent	Yageo/Phycomp	RC0603FR-071ML
2	R103, R104	NA	2 k/200 V/1 percent	Vishay	CRCW12062K00FKEA
1	R203	1.0	1.0/50 V/1 percent	Yageo/Phycomp	RC0603FR-071RL
1	R204	10 k	10 k/75 V/1 percent	Yageo/Phycomp	RC0603FR-0710KL
1	T2	600 µH	ERL35, 14 pin 1600 µH, 1.16 A, N87, Gab 0.4 mm	Würth Electronik	750343236 Rev00
1	T3	1.2 mH	ERL35, 14 pin, N87, 1200 µH, 2 A	Würth Electronik	750343235Rev00
1	VR10	S10K385E2K1	S10K385E2K1/385 V/10 percent	Epcos	B72210S0381K101
1	X30	HTSW-103-07-G-S	Through-hole 0.025" SQ post header, 2.54 mm pitch, three pin, vertical, single row	Samtec	HTSW-103-07-G-S
2	X101, X202	691412120002MB	Through-hole shrouded header, top entry, vertical,	Würth Electronik	691412120002MB

BOM

Quan-tity	Designator	Value	Description	Manufacturer	Part number
			2.5 mm pitch, two pins, single row, white		
1	ZD20	BZX384-C2V7	Zener diode/2.7 V/SOD-323	NXP	BZX384-C2V7
1	ZD41	BZX384-C13	Zener diode/13 V/SOD-323	NXP	BZX384-C13
1	ZD100	SS16HE3	Schottky diode/60 V/1 A/DO-214AC	Vishay	SS16-E3/5AT
2	ZD101, ZD102	BZX384-C12	Zener diode/12 V/SOD-323	NXP	BZX384-C12
0	AC_L, AC_N, DIMMING, FB_AUX, FB_CS, FB_Drain, FB_ZCD, GND, HV_BUS, IC_GND, PFC_CS, PFC_Drain, PFC_GD, PFC_ZCD, SEC_AUX, SEC_AUX_GND, SEC_GND, SEC_LED+, SEC_MAIN*, SPD, TEMP, UART, V_{CC}	TP SMD	Test pad not assembled		
0	C2	NA	Cap-1206-470p/630 V/5 percent/C0G	TDK	C3216C0G2J471J085AA
0	C100, C107	NA	Cap-1206-1n/100 V/0.1/X7R	AVX	12061C102KAT2A
0	FB_GD	TP SMD	Test pad not assembled		
0	J55, J56	NA	0R/50 V	Bourns	CR0603-J/-000ELF
0	Q102, Q103	NA	OptiMOS transistor 60 V, 3 Ω, 300 mA, SOT23	Infineon Technologies	2N7002
0	R10, R11	NA	510 K/350 V/5 percent	Welwyn Components Limited	MFP1-510KJI
0	R100, R106	NA	47 R/200 V/1 percent	Yageo/Phycomp	RC1206FR-0747RL
0	R107, R108	NA	100 k/150 V/1 percent	Yageo/Phycomp	RC0805FR-07100KL
0	X21	NA	Through-hole	Samtec	TSW-102-07-L-S

Quantity	Designator	Value	Description	Manufacturer	Part number
			0.025" SQ post header, 2.54 mm pitch, two pin, vertical, single row		
0	ZD103	NA	Zener diode/24 V/SOD-323	NXP	BZX384-C12

7.1 Transformer specifications

This section provides the transformer design data. The necessary steps to design a transformer based on the design specification can be found in the XDPL8220 design guide [2].

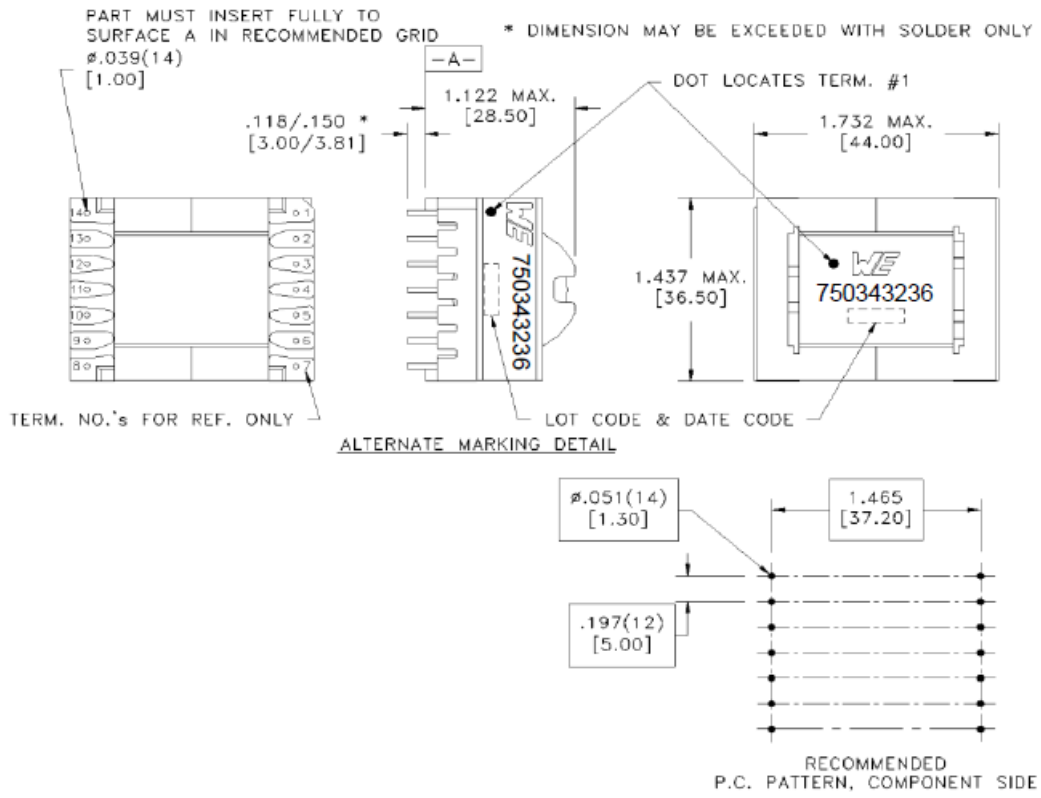

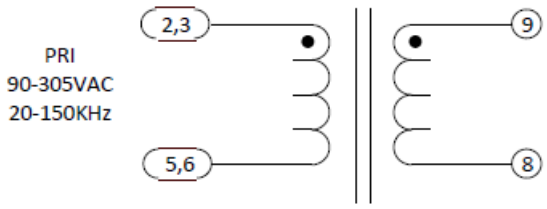

Customer to tie terminals 2&3 and 5&6 on PC board.

WÜRTH ELEKTRONIK

ELECTRICAL SPECIFICATIONS @ 25° C unless otherwise noted:

PARAMETER		TEST CONDITIONS	VALUE
D.C. RESISTANCE	2-5	tie(2+3.5+6), @20°C	0.130 ohms max.
D.C. RESISTANCE	9-8	@20°C	0.033 ohms max.
INDUCTANCE	2-5	tie(2+3,5+6),10kHz, 100mV, Ls	600.0µH ±10%
SATURATION CURRENT	2-5	tie(2+3,5+6), 20% rolloff from initial	3.7A
DIELECTRIC	2-8	4300VAC, 1 second	
DIELECTRIC	2-core	2150VAC, 1 second	
DIELECTRIC	8-core	2150VAC, 1 second	
TURNS RATIO		(2-5):(9-8)	10:1, ±2%

Figure 16 Würth Elektronik PFC choke 750343236 rev00 specification

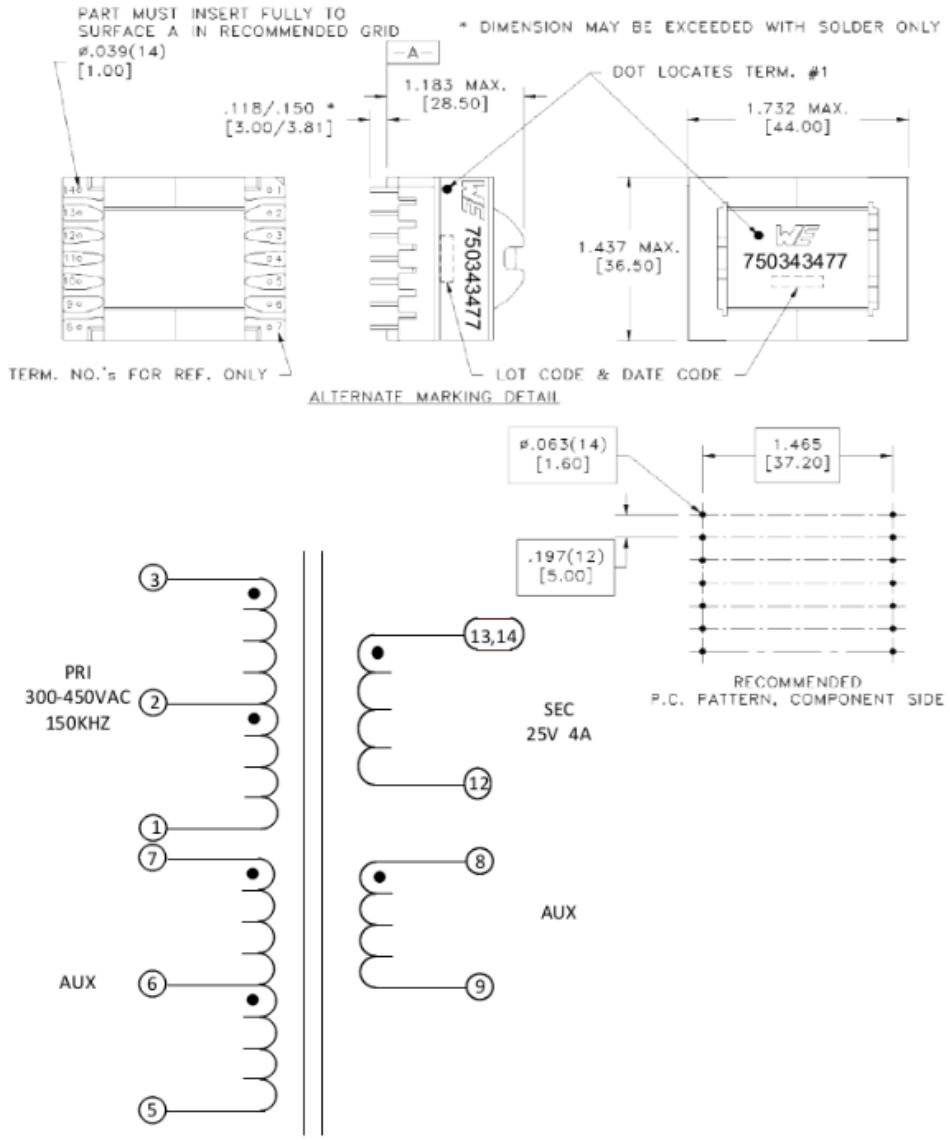

WÜRTH ELEKTRONIK

ELECTRICAL SPECIFICATIONS @ 25° C unless otherwise noted:

PARAMETER		TEST CONDITIONS	VALUE
D.C. RESISTANCE	3-1	@20°C	1.380 ohms max.
D.C. RESISTANCE	7-6	@20°C	0.860 ohms max.
D.C. RESISTANCE	6-5	@20°C	0.120 ohms max.
D.C. RESISTANCE	9-8	@20°C	0.120 ohms max.
D.C. RESISTANCE	13-12	tie(13+14), @20°C	0.086 ohms max.
INDUCTANCE	3-1	10kHz, 100mV, Ls	1000.0µH ±10%
SATURATION CURRENT	3-1	20% rolloff from initial	3.2A
LEAKAGE INDUCTANCE	3-1	tie(5thru14),100kHz, 100mV, Ls	12µH max.
DIELECTRIC	7-8	tie(5+3,9+12), 4300VAC, 1 second	
DIELECTRIC	7-core	tie(5+3), 2150VAC, 1 second	
DIELECTRIC	8-core	tie(9+12), 2150VAC, 1 second	
TURNS RATIO		(3-1):(7-6)	4:1, ±2%
TURNS RATIO		(3-1):(6-5)	32:1, ±2%
TURNS RATIO		(3-1):(8-9)	32:1, ±2%
TURNS RATIO		(3-1):(13-12)	3.2:1, ±2%

Figure 17 Würth Elektronik Flyback transformer 750343477 rev00 specification

8 Configuration set-up and procedures

8.1 XDPL8220 configuration

The tools needed for XDPL8220 parameter configuration are listed in **Table 9**.

Table 9 Tools needed for XDPL8220 parameter configuration

Tool type	Tool name	Description	Ordering/ download link	Ordering/download content
Hardware	.dp Interface Gen2	Interface to control XDPL8220 from PC	IF-BOARD.DP-GEN2	.dp Interface Gen2 x 1 USB cable x 1
Software	.dp Vision	Graphical User Interface (GUI) for parameter configuration	.dp Vision	.dp Vision installer (*.exe)
	XDPL8220 Parameter *.csv file	XDPL8220 parameter configuration file	XDPL8220 project addon installer *Note: Please download the latest version.*	XDPL8220 parameter configuration file (*.csv) XDPL8220 CSV file description XDPL8220 documentation (datasheet, application note, design guide)

Figure 18 shows the hardware set-up needed between the PC and the program connector of the reference design for XDPL8220 parameter configuration.

Note: Please ensure the reference design board is not supplied with any voltage before connecting the programmable cable to the reference design program connector.

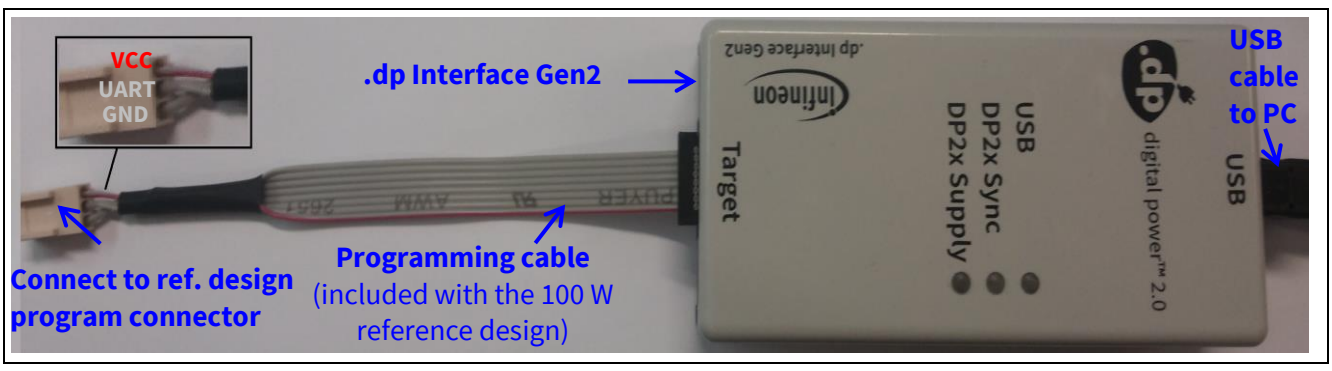

Figure 18 Hardware set-up for XDPL8220 configuration

Please refer to the .dp Vision user manual for a detailed guide to installation and how to use this GUI for parameter configuration. Alternatively, the following simple guide provides quick and easy reference.

After the tools installation (**Table 9**) and hardware connection for XDPL8220 configuration are done, please start the program by clicking the shortcut ".dp Vision" on the desktop.

Note: During program start-up, if the system shows there is a newer version of .dp Vision, please follow the procedures and update it accordingly.

Next, open the XDPL8220 parameter configuration file (*.csv) in the installation folder of the XDPL8220 project add-on. The default installation folder is at: *C:\Users\Username\Infineon Technologies AG\.dp vision basic mode*

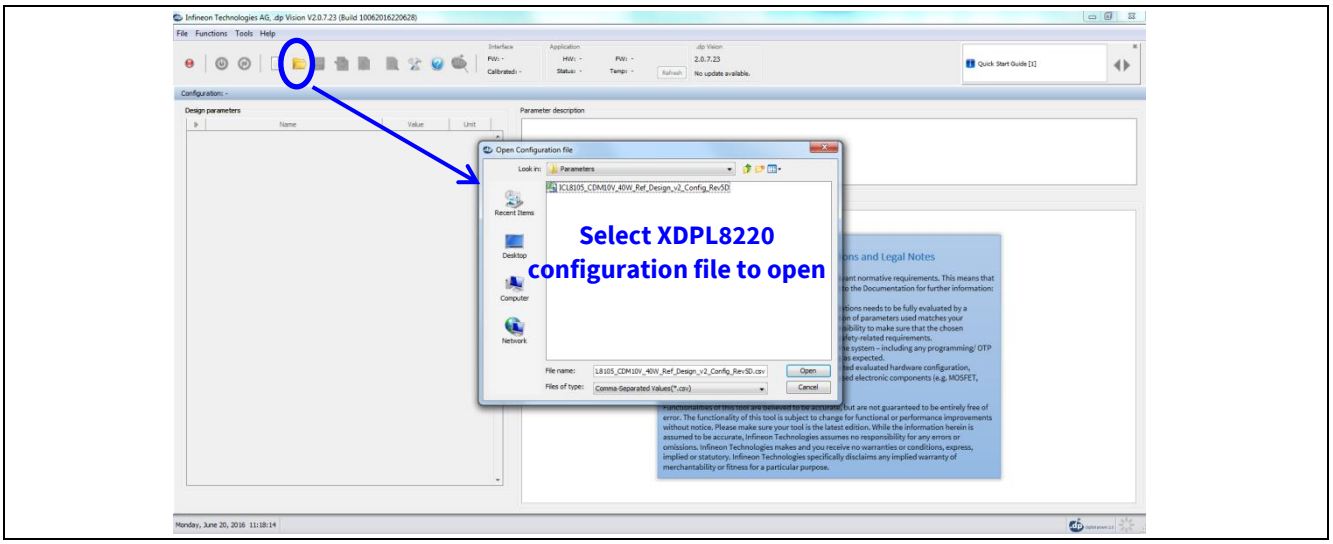

Figure 19 Opening XDPL8220 parameter configuration file (*.csv) in .dp Vision

After opening the parameter *.csv file, a list of XDPL8220 configurable parameters will then be shown (see the box on the left in **Figure 20**). If a parameter value is changed and there is no error detected, the changed value itself will turn blue, like the example of changing *I_out_full* parameter from 1500 mA to 1000 mA in **Figure 20**. Otherwise, if there is an error detected (e.g. exceeded min./max. value), the parameter value which caused the error will turn red and the message bar of .dp Vision (see the top right in **Figure 20**) will have an error message.

Note: The user is not allowed to save, test or burn the configuration if there is an error detected.

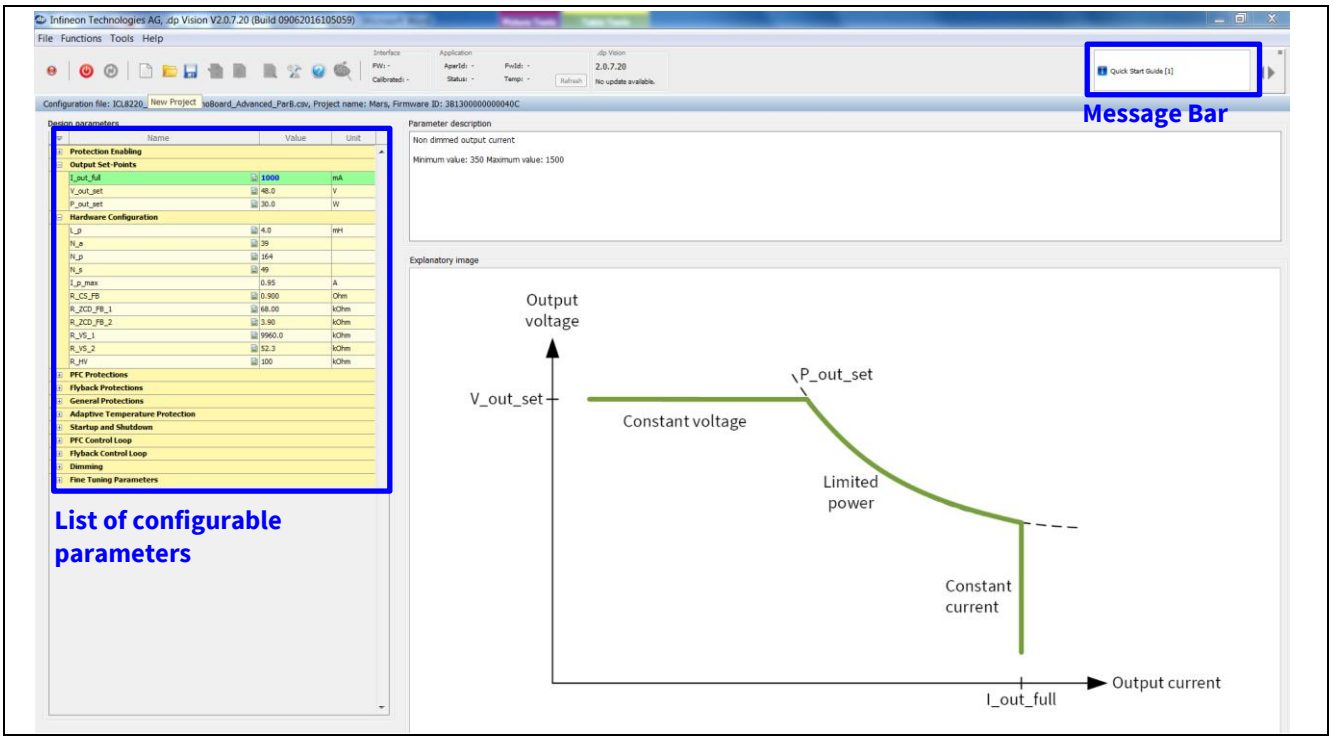

Figure 20 Changing parameter values of XDPL8220 configuration file in .dp Vision

There are two options available to configure the IC based on the parameter values in .dp Vision.

- Burn configuration

  As the XDPL8220 chip on the 100 W reference design PCB was already permanently burned with a first full set of parameters in its One-Time Programmable (OTP) memory space, any parameter value change using this option is considered as parameter patching. The OTP memory space dedicated to patching or burning the parameter value change has a memory size of 274 words.

  Each time the burn configuration function is executed, it will detect if there is parameter value difference between the saved configuration file and the target XDPL8220. If there is difference detected, each burn configuration will consume a minimum of three words depending on how many parameters need to be patched. However, the process will be aborted if it consumes more memory space than what remains in the target IC. As a result, the user will have to replace the target IC with a new XDPL8220 chip, in order to burn the configuration.

  Table 10 shows the recommended procedure for using the burn configuration function in .dp Vision to burn a first full set of new parameters or patch the parameter into the OTP memory.

Table 10 Burn configuration procedure

Step	Instruction
I	Open configuration file (see example in **Figure 19**).
II	If necessary, change any parameter value then press [File] >> [Save] or [File] >> [Save as], to save the configuration file. Otherwise, proceed to step III.

III	Ensure that the primary supply voltage (e.g. AC input) to the board is switched off or disconnected and the hardware connection for configuration is OK based on **Figure 18**.
IV	Press to supply power and establish connection to the target XDPL8220. After this step, XDPL8220 will be in configuration mode and the device status should change to .
V	Press to burn configuration into target XDPL8220. After this step, you should see a pop-up window, similar to one of these below. 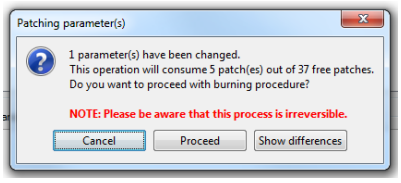 OR 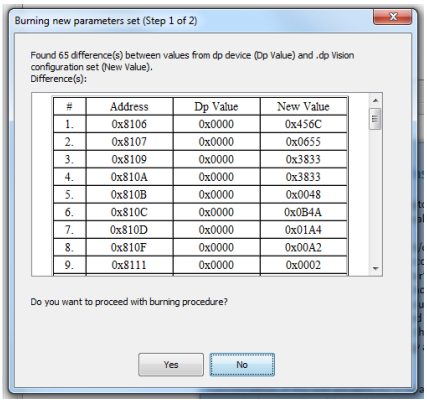
VI	Press “Proceed” or “Yes” to burn the configuration. After this step, a pop-up window shows the burning was successful.
VII	Press “OK” on the pop-up window then disconnect the programming cable from the board connector program and test the application, if needed.

- Test configuration

  This function will download the parameter values from the list in .dp Vision into the XDPL8220 RAM memory space and it will then be followed by an automatic IC start-up for application testing with the new configuration.

  Unlike using the burn configuration, parameter configuration with this option is not permanent because the loaded RAM content will be lost once the IC supply voltage is turned off, but the advantage of using this option is it does not consume OTP memory space, thus there is no limit to the number of parameter value changes.

  Table 11 shows the recommended procedure for using the test configuration function in .dp Vision to load the new parameter values into the RAM and test the application with the new configuration.

Table 11 Test configuration procedures

Step	Instruction
I	Open configuration file and change parameter value (see example in **Figure 19** and **Figure 20**).
II	Ensure that the primary supply voltage (e.g. AC input) to the board is switched off and the hardware connection for configuration is OK based on **Figure 18.**
III	Press to supply power and establish connection to the target XDPL8220. After this step, XDPL8220 will be in configuration mode and the device status should change to .
IV	Ensure LED output is connected to the board and switch on AC input (e.g. 230 V AC). After this step, the board does not start up because XDPL8220 is still in configuration mode.
V	Press to test configuration with target XDPL8220. After this step, the IC will automatically start up with the new configuration and you should see a pop-up window like the one below: 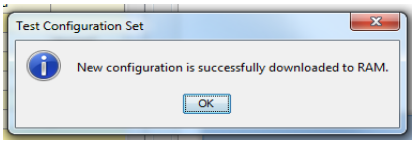
VI	Press “OK” on the pop-up window.
VII	Repeat the steps to test another configuration change. Otherwise, turn off the AC input and disconnect the programming cable from the board connector program.

Note: If there is any error encountered between steps I and VII, please refer to the message bar of .dp Vision for the error message. For more details, refer to the .dp Vision user manual.

9 References

[1] XDPL8220 datasheet

[2] XDPL8220 design guide

[3] .dp vision – basic mode user manual

[4] XDPL8220 CSV file description

[5] Power management selection guide:
http://www.infineon.com/powermanagement-selectionguide

Revision history

Major changes since the last revision

Page or reference	Description of change
All	First release V1.0 2019-07-01

Trademarks
All referenced product or service names and trademarks are the property of their respective owners.

Edition 2019-07-01

Published by

Infineon Technologies AG

81726 Munich, Germany

© 2019 Infineon Technologies AG. All Rights Reserved.

Do you have a question about this document?

Email: erratum@infineon.com

Document reference
ER_1907_PL21_1907_162110

IMPORTANT NOTICE

The information contained in this application note is given as a hint for the implementation of the product only and shall in no event be regarded as a description or warranty of a certain functionality, condition or quality of the product. Before implementation of the product, the recipient of this application note must verify any function and other technical information given herein in the real application. Infineon Technologies hereby disclaims any and all warranties and liabilities of any kind (including without limitation warranties of non-infringement of intellectual property rights of any third party) with respect to any and all information given in this application note.

The data contained in this document is exclusively intended for technically trained staff. It is the responsibility of customer's technical departments to evaluate the suitability of the product for the intended application and the completeness of the product information given in this document with respect to such application.

For further information on the product, technology, delivery terms and conditions and prices please contact your nearest Infineon Technologies office (**www.infineon.com**).

WARNINGS

Due to technical requirements products may contain dangerous substances. For information on the types in question please contact your nearest Infineon Technologies office.

Except as otherwise explicitly approved by Infineon Technologies in a written document signed by authorized representatives of Infineon Technologies, Infineon Technologies' products may not be used in any applications where a failure of the product or any consequences of the use thereof can reasonably be expected to result in personal injury.