Infineon ISOFACE™ automotive qualified quad-channel digital isolators design guide

About this document

Scope and purpose

This document introduces Infineon's AEC-Q100 qualified ISOFACE™ quad-channel digital isolators and gives design guidance for system engineers designing galvanical isolation in automotive applications.

Intended audience

This document is intended for design engineers who want to design with Infineon's digital isolators for isolation purposes in auotomotive applications.

Table of contents

About this document **1**
Table of contents **1**
1 Introduction to Infineon AEC-Q100 qualified ISOFACE™ digital isolators **2**
1.1 Isolation technology 2
1.2 Product features 2
1.3 Product variants overview 3
2 Selection guide for ISOFACE™ digital isolators **4**
3 PCB design guidelines **7**
3.1 PCB material 7
3.2 Board layer stack 7
3.3 Layout considerations 8
4 Typical applications for ISOFACE™ auotomotive digital isolators **9**
4.1 Applications using automotive quad-channel digital isolators 9
Revision history **12**

1 Introduction to Infineon AEC-Q100 qualified ISOFACE™ digital isolators

Galvanic isolation provides level-shift functions, improves electrical noise immunity and ensures safety in high-voltage (HV) automotive applications. To meet the continually growing requirements for isolation in electrical vehicle (EV) applications, Infineon Technologies is introducing the first generation of ISOFACE™ quad-channel digital isolators with AEC-Q100 qualification, providing high robustness while ensuring accurate timing performance and low power consumption.

1.1 Isolation technology

This first digital isolator family uses Infineon's patented coreless transformer (CT) technology to isolate the signals crossing different voltage domains. It is a magnetically coupled isolated technology, which uses semiconductor manufacturing processes to integrate an on-chip transformer consisting of metal spirals separated by a silicon dioxide (SiO_2) insulation barrier, as shown in Figure 1. The on-chip coreless transformers are used to transmit signals between the input and output chips. In addition, functions such as glitch filter, communication modulation, watchdog and undervoltage lockout (UVLO) are integrated to ensure robust and fail-safe data transmission even in critical industrial environments where high voltages and noises are present.

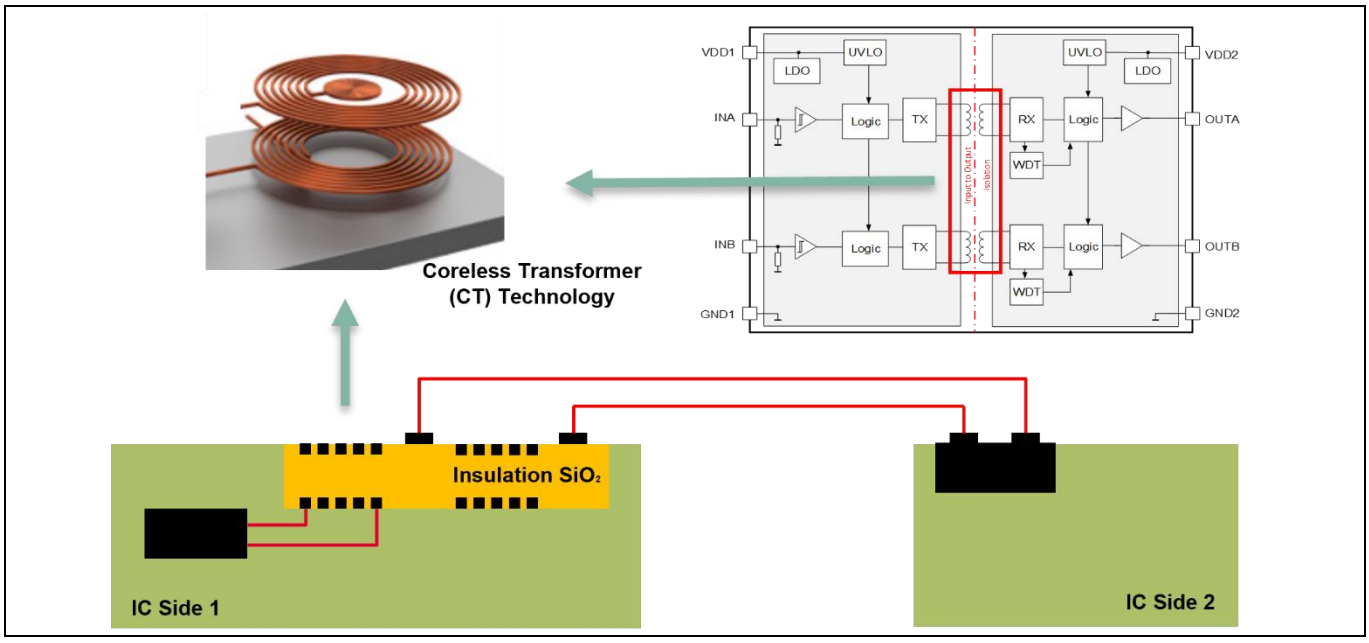

Figure 1 Cross-section of Infineon's CT, used in the ISOFACE™ digital isolator products

1.2 Product features

Infineon's ISOFACE™ digital isolators 4DIRx4xxHA with AEC-Q100 qualification are designed to meet challenging requirements in automotive applications, and have the following features:

- High common-mode transient immunity (CMTI) of more than 100 kV/µs
- High or low fail-safe default output options available
- Wide operating supply voltage from 2.7 to 6.5 V (absolute maximum 7.5 V)
- Accurate timing performance with 26 ns typical propagation delay and -5/+6 ns spread

- Low power consumption with maximum 6.4 mA at 3.3 V and 1 Mbps
- Comparative tracking index (CTI) greater than 600 V and material group I

1.3 Product variants overview

Product variants with different channel configurations, fail-safe default output states and output enable polarities are available, as listed in Table 1.

Table 1 Product variants of Infineon ISOFACE™ quad-channel digital isolator family

Part number	Channel configuration	Default output state	Output enable	Isolation rating	Package
4DIR0400HA	4 forward 0 reverse (4+0)	Low	Active-high	V_{ISO} = 5700 V_{RMS} (UL1577 Ed. 5)	PG-DSO-16 wide-body 10.3 x 10.3 mm
4DIR0401HA		High			
4DIR1400HA	3 forward 1 reverse (3+1)	Low			
4DIR1401HA		High			
4DIR2400HA	2 forward 2 reverse (2+2)	Low			
4DIR2401HA		High			
4DIR1420HA	3 forward 1 reverse (3+1)	Low	Active-low		
4DIR1421HA		High			

The suitable target applications are:

- Isolated serial peripheral interface (SPI) in automotive applications
- Hybrid, electric and power train system (EV/HEV)
    - Onboard charger (OBC)
    - DC-DC converter
    - Traction inverter
    - Inverter and motor control
    - Battery management system (BMS)

2 Selection guide for ISOFACE™ digital isolators

Finding the right device from the ISOFACE™ quad-channel digital isolator family is not difficult, as they have certain common features but in different channel configurations and default output states to meet requirements across various automotove applications. However, there are some important considerations when selecting the right digital isolator, depending on the application requirements.

- **Data rate**

The ISOFACE™ quad-channel digital isolator family provides a single data rate of maximum 40 Mbps, which is suitable for isolating gate drive signals in switched-mode power supply (SMPS) applications and for isolating low/medium-speed communication interfaces in automotive applications. Table 2 summarizes the applications that are suitable for the given data rate.

Table 2 Suitable applications for ISOFACE™ digital isolators with maximum 40 Mbps data rate

ISOFACE™ digital isolator	Part number	Maximum data rate	SMPS applications	Isolated communication interfaces
Quad-channel digital isolator	4DIRx4xxHA	40 Mbps	Up to 20 MHz switching frequency	Isolated UART, CAN and SPI communication[1]

- **Isolation specification requirements**

Isolation withstand voltage, together with package requirements such as creepage, clearance, CTI and pollution degree, are the parameters mainly used to select the right digital isolator for the application.

For instance, Infineon's ISOFACE™ 4DIRx4xxH digital isolators have minimum 8 mm creepage and clearance, and a CTI of more than 600 V can withstand 5700 V_{RMS} isolation voltage (V_{ISO}) according to UL 1577. They are suitable for automotive applications that require reinforced isolation. Table 3 gives an overview of the isolation specifications of ISOFACE™ quad-channel digital isolators.

Table 3 Isolation specifications of ISOFACE™ quad-channel digital isolators

ISOFACE™ digital isolator	Part number	Minimum creepage and clearance	Suitable isolation type	Maximum isolation voltage V_{ISO} (UL 1577)	Maximum working voltage (V_{IOWM})	Maximum surge isolation voltage (V_{IOSM})
Quad-channel digital isolator	4DIRx4xxHA	8 mm	Reinforced isolation	5700 V_{RMS}	800 V_{RMS} [2]	11 kV_{pk}

[1] The maximum communication speed is dependent on the PWD and complete loop delay caused by digital isolator, transceiver and cable.

[2] Reinforced isolation, pollution degree 2, material group I.

- **Channel configuration**

Determining channel configuration means choosing the number of channels and their direction. For instance, a 4+0 (four forward channels) quad-channel digital isolator is suitable for isolated gate drive signal transfer (e.g., low- and high-side switches) in power converter topologies such as half-bridge or full-bridge. A 3+1 (three forward and one reverse) quad-channel digital isolator is often needed for SPI communication. On the other hand, 2+2 (two forward and two reverse) can be used for isolated gate drive signal transfer with fault feedback. Table 4 summarizes the different possible channel configurations of the ISOFACE™ quad-channel digital isolators and their corresponding applications.

Table 4 Channel configurations and applications of ISOFACE™ quad-channel digital isolators

ISOFACE™ digital isolator	Isolation requirement	Part number	Channel configuration	Suitable applications
Quad-channel digital isolator	Reinforced isolation with isolation voltage (V_{ISO}) up to 5700 V_{RMS}	4DIR04xxHA	4 forward 0 reverse (4+0)	SPMS applications with full-bridge topologies
		4DIR14xxHA	3 forward 1 reverse (3+1)	SMPS applications, isolated SPI and RS-485 communication interfaces
		4DIR24xxHA	2 forward 2 reverse (2+2)	SMPS applications, isolated UART and CAN communication interface

- **Fail-safe default output state**

Fail-safe default output state indicates the output condition when the input channel of a digital isolator is unpowered or the input pins are open. This is an important criterion for selecting the right digital isolator depending on the application. Typically, default low output state is preferred when the digital isolators are used to isolate the gate driving signals, for example in SMPS applications. The output of digital isolators stays safely off whenever any error happens on the input side. On the other hand, for isolating communication interfaces, it is preferred to have a default high output, because most communication buses are defined as high logic level when the bus is in idle state. Table 5 shows the preferred default output states for different applications.

Table 5 Preferred default output state of ISOFACE™ digital isolators for different applications

Application	Default output state	Part number
Isolating gate drive signals in SMPS applications	Low	4DIRx4x0HA
Isolating communication interfaces such as CAN, UART, SPI, RS-485	High	4DIRx4x1HA

- **Common mode transient immunity**

CMTI is defined as the ability of a digital isolator to withstand fast changes in the potential difference between its grounds. A high CMTI value, typically specified in kV/µs, indicates a robust isolation technology and fail-free data transmission even under the critical condition of fast transients at high switching frequencies.

ISOFACE™ automotive quad-channel digital isolators provide the benchmark highest CMTI of 100 kV/µs minimum currently on the market, and are the best choices for high power density designs using SiC/GaN that can have high dv/dt (more than 100 kV/µs) and motor control applications that have high common-mode noise.

Figure 2 gives an overview of how to select the right device from the ISOFACE™ automotive digital isolator family according to key parameters and application requirements.

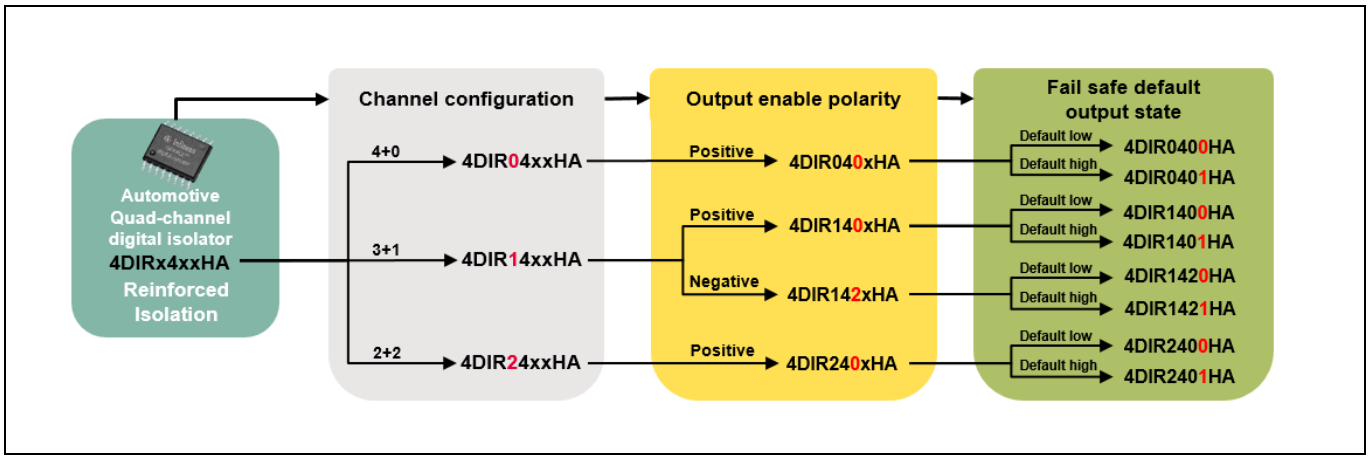

Figure 2 Selection guide for ISOFACE™ automotive quad-channel digital isolators

3 PCB design guidelines

3.1 PCB material

As Infineon's quad-channel digital isolators have a maximum data rate of 40 Mbps, commonly used FR-4 material is suitable for the PCB. Its characteristics of slight moisture absorption, reliable insulation and considerable mechanical strength make it preferred over alternatives.

3.2 Board layer stack

To achieve a low EMI performance on a system using digital isolators with high data rate up to 40 Mbps, it is highly recommended to design the system application board with a four-layer PCB design, described as follows:

- Layer 1: high-speed layer
  This layer is intended for high-speed signal traces, for example signal inputs and signal outputs.
- Layer 2: ground layer
  One ground layer is placed in between to provide the shielding effect.
- Layer 3: power layer
  This layer is intended for all power supply traces for the digital isolator.
- Layer 4: low-speed or ground layer
  If there are no low-speed signal traces available, this layer can be designed as a ground layer for better shielding.

The layer stacking is shown in Figure 3.

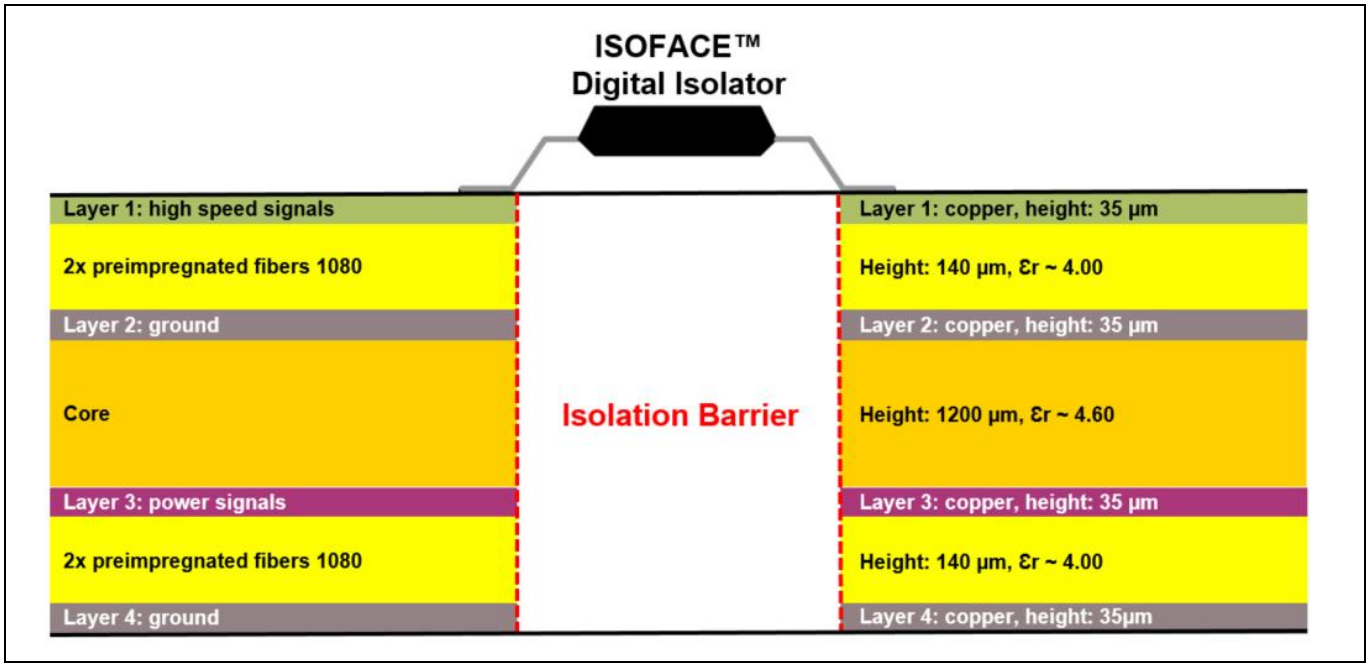

Figure 3 Layer stacking of the system design using digital isolators

3.3 Layout considerations

To design ISOFACE™ digital isolators in HV applications with a high data rate, there are some important layout considerations to ensure safe, fail-free data transmission. As Figure 4 shows, using the example of ISOFACE™ 4DIR1400HA, a digital isolator needs to be connected to high traces, power supplies and silent grounds.

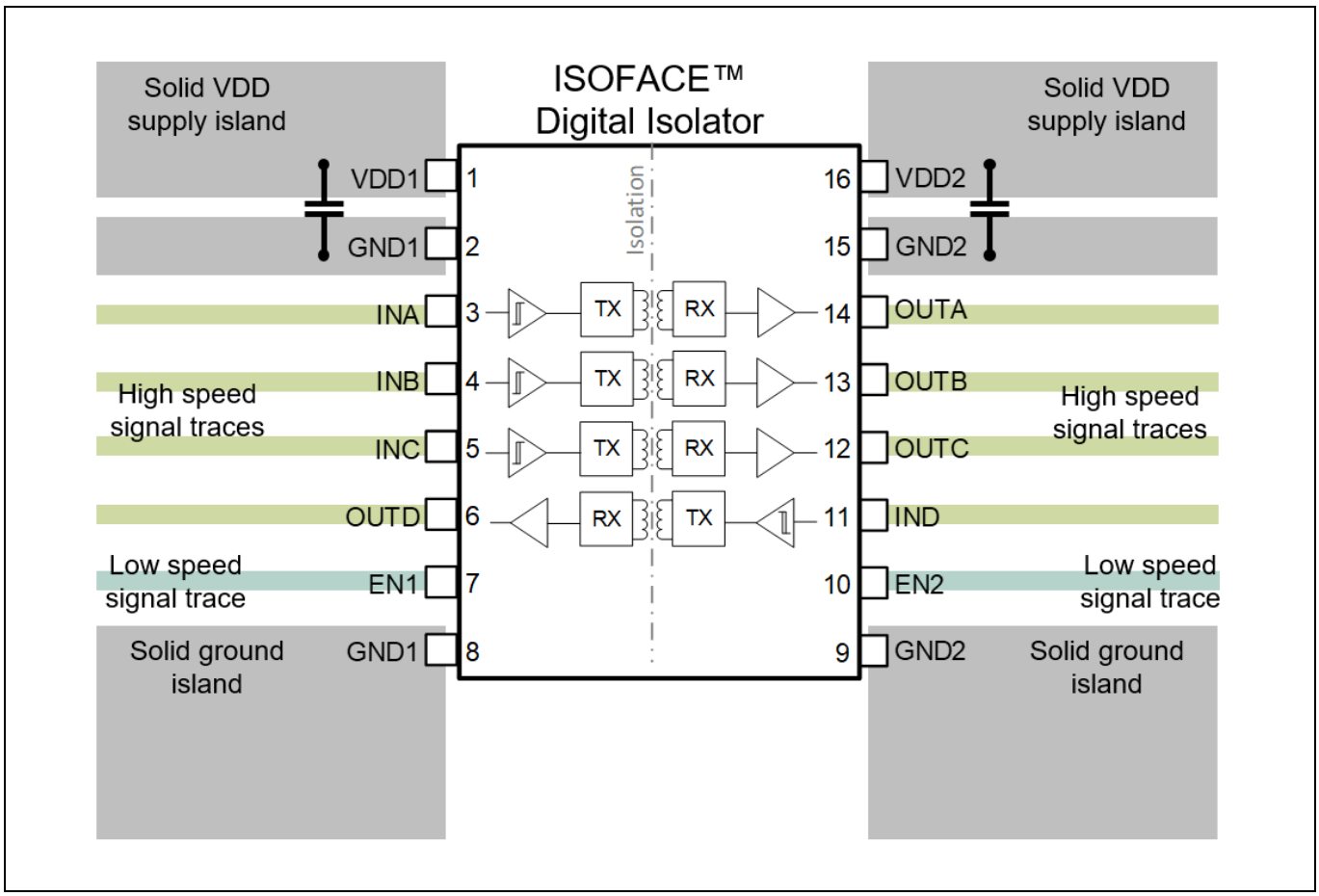

Figure 4 Layout considerations for designs with ISOFACE™ digital isolator

There are some rules to observe, as summarized below:

- Place solid power supply islands directly at the power supply VDD pins to reduce inductance caused by traces, as currents with high peak flow into the VDD pins especially at high data rates.
- Place high-frequency bypass capacitors as close as possible to the VDD and GND pins. It is highly recommended to use two bypass capacitors of 100 nF and 1 µF on both sides at high data rates for smooth output signals.
- Place solid ground islands directly at the ground pins to help dissipate heat through the PCB.
- Route the high-speed signals on the top layer and avoid using vias to reduce parasitics, which could couple noises and influence the data transmission.
- Route the low-speed signals on the bottom layer, as they can tolerate more parasitics.

4 Typical applications for ISOFACE™ auotomotive digital isolators

ISOFACE™ digital isolators provide both functional and safety isolation for HV automotive applications. Together with non-isolated gate drivers, they are preferred in SMPS with high flexibility and integrated communication, especially with GaN-IPS. Together with transceivers or stand alone, they are suitable for the isolated communication interface.

4.1 Applications using automotive quad-channel digital isolators

ISOFACE™ quad-channel automotive digital isolators feature a wide supply range, high CMTI and CTI greater than 600 V_{RMS} to enable robust data transmission with high noise immunity in both SMPS applications and isolated communication interfaces in automotive applications.

- **OBC in EV using 4DIR1400HA**

The OBC is the most important part of an EV. It is an AC-DC converter, which provides stable HV DC outputs to charge the onboard battery. As high efficiency is a key parameter, digital controllers are widely used as they provide more flexibility of the control mechanism and communication ability. To ensure input-to-output safety isolation, a digital isolator with reinforced isolation is often utilized for transferring the PWM gate control signals and additional communication over the isolation barrier.

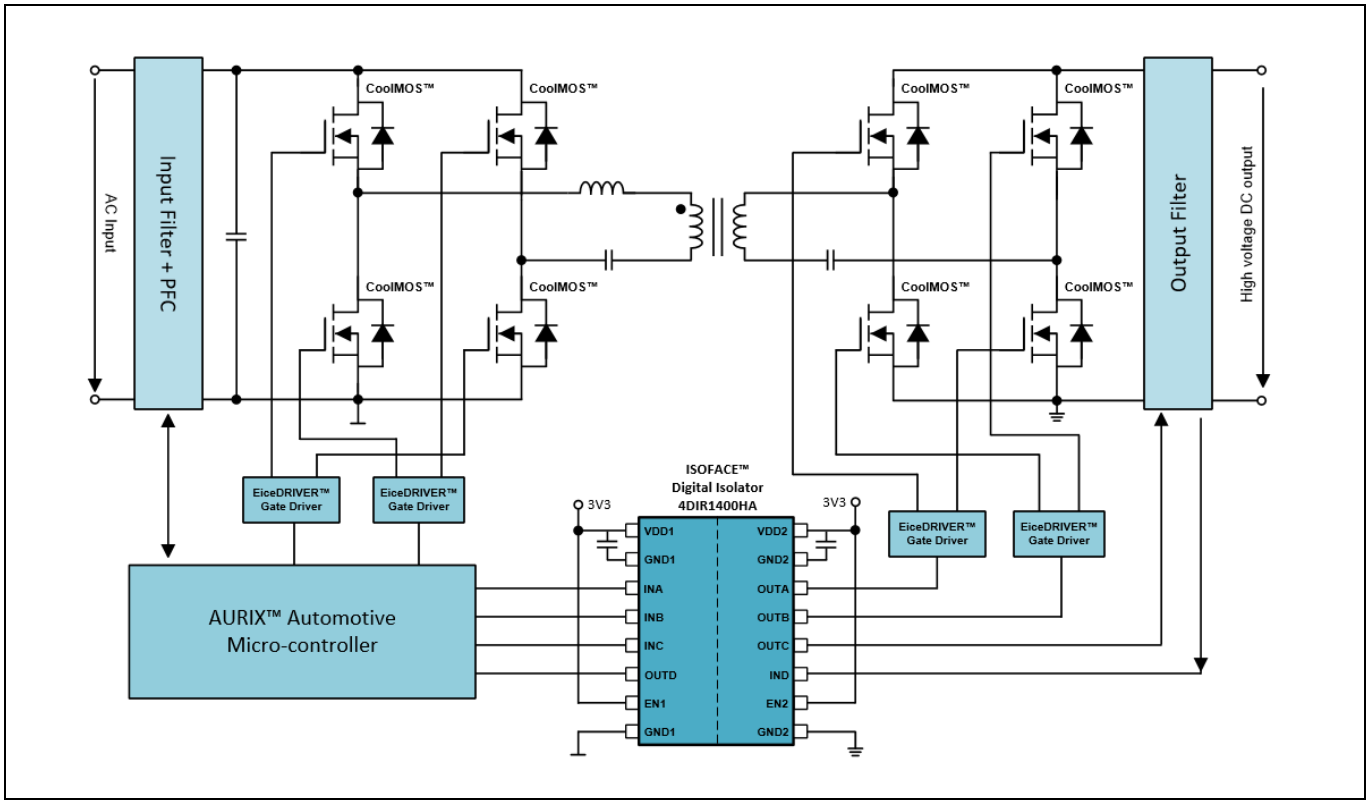

Figure 5 Bidirectional single-phase dual active bridge (DAB) converter using 4DIR1400HA

As an example, Figure 5 illustrates Infineon's solution for an OBC, which employs AURIX™ microcontrollers on the primary side to control the power factor correction (PFC) stage and the DAB HV DC-DC converter. The full-bridge rectification gate drive signals (high- and low-side) are transferred to the secondary side through two

forward channels of the automotive digital isolator 4DIR1400HA. The other two channels are used for output control and feedback for protection.

Together with Infineon's comprehensive portfolio of AURIX™ microcontrollers, automotive EiceDRIVER™ gate driver ICs, and power switches such as OptiMOS™, CoolMOS™, CoolSiC™ and CoolGaN™, they create a complete system solution that meets the growing isolation requirements in modern automotive power electronics applications.

- **Isolated CAN communication**

Controller area network (CAN) communication has been widely used in automotive applications. It has the advantage that only a single pair of cables (two communication lines) is needed at the physical layer for data transmission. When it comes to ensuring safety or preventing noise interference in an isolated CAN interface with additional functions such as standby mode control, the ISOFACE™ quad-channel digital isolator 4DIR2401HA stands out as a top choice for providing galvanic isolation. This reliable isolator offers high CMTI and very low pulse-width distortion (PWD), which are crucial features for achieving reliable communication. Additionally, the isolator's default high output state ensures that the communication line (typically in a logic high during the idle state) will remain unblocked even in the event of a failure, preventing potential power supply loss on the input side. Two channels (one forward and one reverse) are used for CAN communication; the other two channels can be used for GPIO purposes such as standby or mode control.

Together with Infineon's automotive CAN transceiver TLE9251, an example of an isolated CAN interface is illustrated in Figure 6. ISOFACE™ 4DIR2401HA is placed between the controller and the transceiver to provide galvanic isolation.

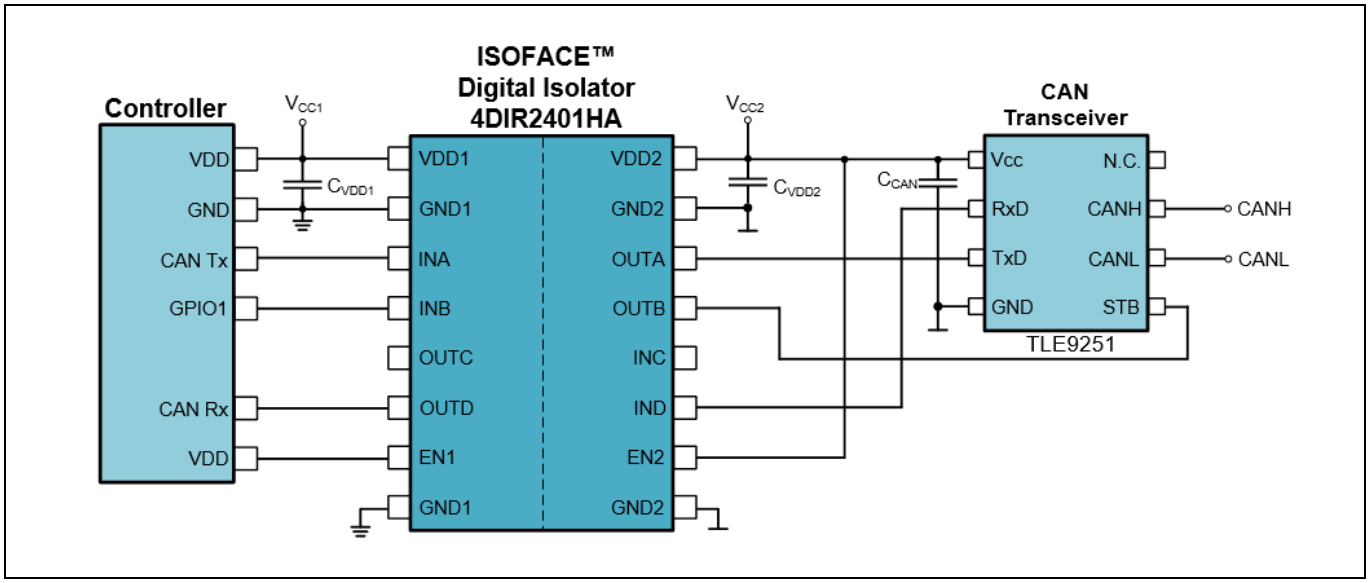

Figure 6 Isolated CAN communication using ISOFACE™ 4DIR2401HA

- **Isolated SPI communication using 4DIR1421HA**

SPI is one of the most widely used interfaces between microcontrollers and peripheral ICs such as sensors or memory storage devices in automotive applications. When communication takes place between systems with different grounds, digital isolators are preferred for isolation. Figure 7 shows the typical isolated SPI using ISOFACE™ 3+1 digital isolator 4DIR1421HA. With its negative enable pin /EN1 on the master side, it can be connected to the /CS pin of the master device directly. This reduces the need for an inverter.

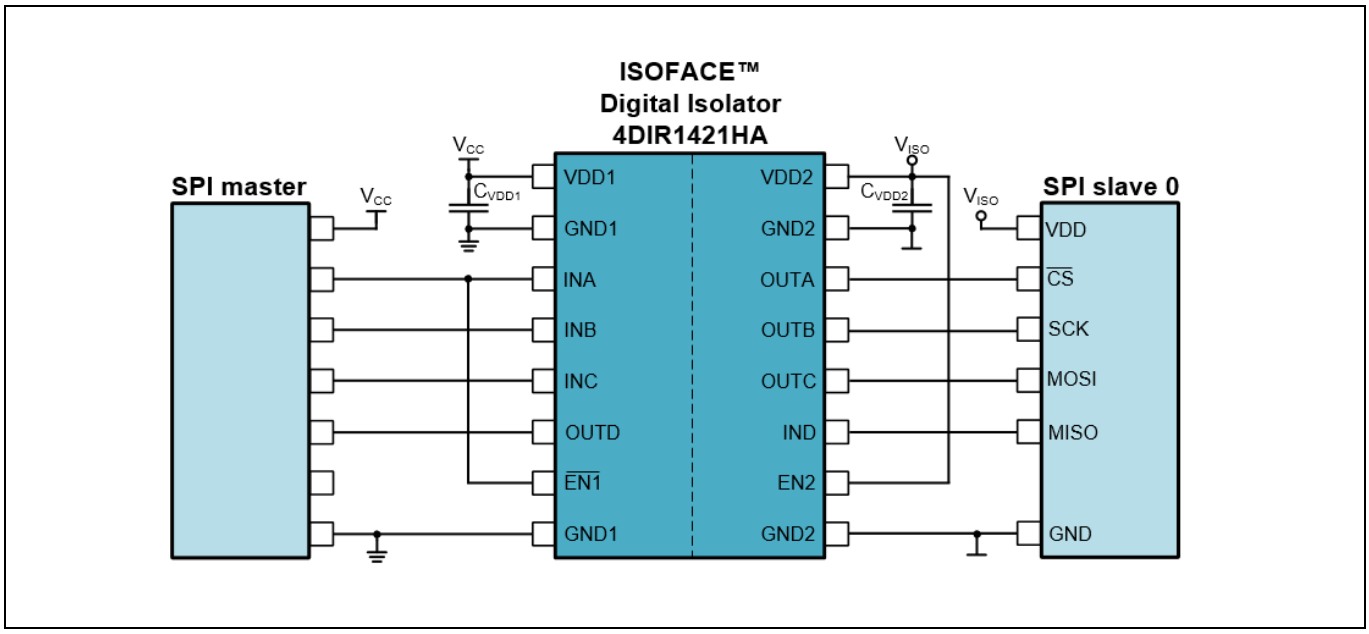

Figure 7 Isolated SPI communication using 4DIR1421HA

Revision history

Document version	Date of release	Description of changes
V 1.0	2023-08-21	Initial release

Trademarks
All referenced product or service names and trademarks are the property of their respective owners.

Edition 2023-08-21

Published by

Infineon Technologies AG

81726 München, Germany

© 2023 Infineon Technologies AG. All Rights Reserved.

Do you have a question about this document?

Email: erratum@infineon.com

Document reference

DG_2307_PL21_2308_215354

Important notice

The information contained in this application note is given as a hint for the implementation of the product only and shall in no event be regarded as a description or warranty of a certain functionality, condition or quality of the product. Before implementation of the product, the recipient of this application note must verify any function and other technical information given herein in the real application. Infineon Technologies hereby disclaims any and all warranties and liabilities of any kind (including without limitation warranties of non-infringement of intellectual property rights of any third party) with respect to any and all information given in this application note.

The data contained in this document is exclusively intended for technically trained staff. It is the responsibility of customer's technical departments to evaluate the suitability of the product for the intended application and the completeness of the product information given in this document with respect to such application.

Warnings

Due to technical requirements products may contain dangerous substances. For information on the types in question please contact your nearest Infineon Technologies office.

Except as otherwise explicitly approved by Infineon Technologies in a written document signed by authorized representatives of Infineon Technologies, Infineon Technologies' products may not be used in any applications where a failure of the product or any consequences of the use thereof can reasonably be expected to result in personal injury.