Design and implementation of 48 V, 12 kW battery backup unit (BBU)

Based on AN064535

About this document

Scope and purpose

This document introduces Infineon's 48 V-class, 12 kW bidirectional battery backup unit (BBU), based on the proprietary differential-power current-fed step-up step-down (DP-CF-SUSD) topology. It summarizes the operating concept, modular hardware, digital control, and selected laboratory results to support an initial evaluation discussion. For evaluation boards, the full application note AN064535 [1], and firmware, contact Infineon support/sales/FAE representative.

Note: *This document is an evaluation overview, not a production qualification or a guarantee of performance outside the stated test conditions.*

Intended audience

Power system architects, hardware and firmware engineers, and system integrators developing rack-level battery backup converters for AI servers and data centers.

Keypoints

- Explains partial power conversion for efficient bidirectional battery-to-bus regulation near matched voltages
- Describes modular hardware, interleaved phases, digital control, sensing, and protection implementation
- Demonstrates discharge, charging, thermal, efficiency, and transient behavior under defined laboratory conditions
- Provides evaluation guidance for cooling, current stress, voltage range, and rack-level system integration

About this product family

Product family

- OptiMOS™ is Infineon’s low-voltage power MOSFETs optimized for highest efficiency and power density. It targets demanding DC-DC and power conversion applications with reduced conduction and switching losses
- XENSIV™ is Infineon’s sensor product family offering magnetic, pressure, radar, and MEMS microphone solutions. It enables accurate sensing and robust system performance across automotive, industrial, and consumer applications
- PSOC™ Control C3 MCUs are high-performance real-time controllers based on Arm® Cortex®-M33 with advanced analog and control peripherals. They are designed for digital power, motor control, and industrial control applications requiring fast response and high reliability

About this product family

Target applications

- AI and data center: Rack-level DC backup power for AI servers and data centers; bidirectional conversion between a battery pack and a 48 V-class DC bus

Table of contents

About this document **1**
About this product family **1**
Table of contents **3**
1 Introduction **4**
1.1 Key features 4
1.2 Reference design at a glance 4
1.3 Hardware implementation 5
1.4 Why evaluate this approach? 5
2 Partial power conversion: the concept **6**
2.1 Inside the DP-CF-SUSD concept 6
2.2 Application challenges and topology benefits 7
3 System architecture and digital control **8**
3.1 Operating modes 8
3.2 Firmware and control 8
4 Experimental results **9**
4.1 12 kW discharge demonstration 9
4.1.1 What the efficiency result shows 9
4.1.2 Translate the result into an evaluation target 9
4.2 Full-power buck-mode thermal performance 9
4.2.1 Thermal performance in context 10
4.3 Operating range and dynamic response 10
4.3.1 Selected laboratory results at a glance 11
4.3.2 From laboratory results to a rack-level requirement 11
5 Summary **12**
References **13**
Revision history **14**
Disclaimer **15**

1 Introduction

Rack-level BBUs must deliver high discharge power while meeting demanding space, cooling, and dynamic-load requirements. AN064535 presents four interleaved 3 kW power phases with bidirectional step-up and step-down operation. Its DP-CF-SUSD topology processes the differential portion of transferred power rather than the full load power. This can reduce conversion losses, particularly when battery and bus voltages are nearly identical. Two PSOC™ Control C3 MCUs divide the responsibility between power control and housekeeping, including external communication (see [1], sections 2 to 4).

1.1 Key features

- 12 kW discharge architecture: four parallel, interleaved power phases rated at 3 kW each
- Bidirectional DP-CF-SUSD conversion with buck and boost operation across the battery-to-bus voltage crossover
- Partial power processing reduces the active power handled by the conversion stage; the benefit depends on the voltage ratio
- Modular assembly: one main board, four power boards, two protection cards, and one controller card
- Dual-loop regulation with one bus-voltage loop and individual phase-current loops for active current sharing
- Single-phase charging with constant-current (CC) and constant-voltage (CV) operation; one of the discharging phases can be used as its support bidirectional power flow
- Current, voltage, and temperature monitoring, with dedicated protection/ORing hardware for fault isolation

1.2 Reference design at a glance

Table 1 Reference design

Parameter	Reference design/reported test conditions
Discharge power	12 kW total; four 3 kW phases
Battery voltage tested	**Discharge:** 40 V to 59 V across buck/boost tests; CC/CV charging **Demonstration:** 38 V to 54.8 V
DC bus	48 V-class application; 50 V in the reported tests
Topology	Bidirectional DP-CF-SUSD partial power converter; non-isolated battery-to-bus path
Phase operation	Four-phase interleaved discharge; one of the phases for charging
Board assembly	One mainboard, four power boards, two protection cards, one controller card
Control hardware	Two PSOC™ Control C3 MCUs: power control and auxiliary/system functions
Sensing	XENSIV™ TLE4973 current sensing, phase-current sensing, voltage sensing, and NTC temperature sensing
Protection hardware	Dedicated protection/ORing cards; application-level protection and cooling require validation

1.3 Hardware implementation

The main board distributes power and routes sensing and control signals. Four pluggable power boards share the discharge load. Two protection cards are located near the bus output, while the controller card coordinates regulation, monitoring, and system operation. Connector-based construction supports modular assembly and access to individual boards (see [1], Section 4).

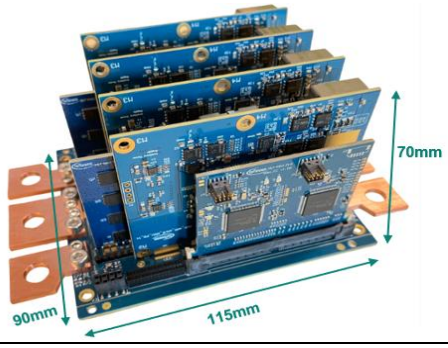

Figure 1 Fully assembled 12 kW BBU (AN064535 [1], Figure 60)

1.4 Why evaluate this approach?

This board allows you to evaluate high discharge power, bidirectional charging, and modular implementation in one reference platform. Partial power processing offers the potential to reduce conversion losses when battery and bus voltages are nearly identical, while active phase-current sharing and interleaving support balanced loading and lower combined ripple.

2 Partial power conversion: the concept

A direct power path carries a part of the battery-to-bus power, while the conversion stage supplies the voltage difference required for regulation. The fraction of active processed power falls as battery and bus voltages approaches one another. With larger voltage differences, this advantage diminishes because circulating current and component losses still matter.

A conventional full-power converter processes essentially all transferred power through its conversion stage. A Partial Power Concept combines a direct power contribution with a controlled conversion contribution that supplies the voltage difference needed to regulate the bus as battery voltage changes. Processing a smaller amount of active power can reduce conversion losses and the power-handling requirements of parts of the conversion stage.

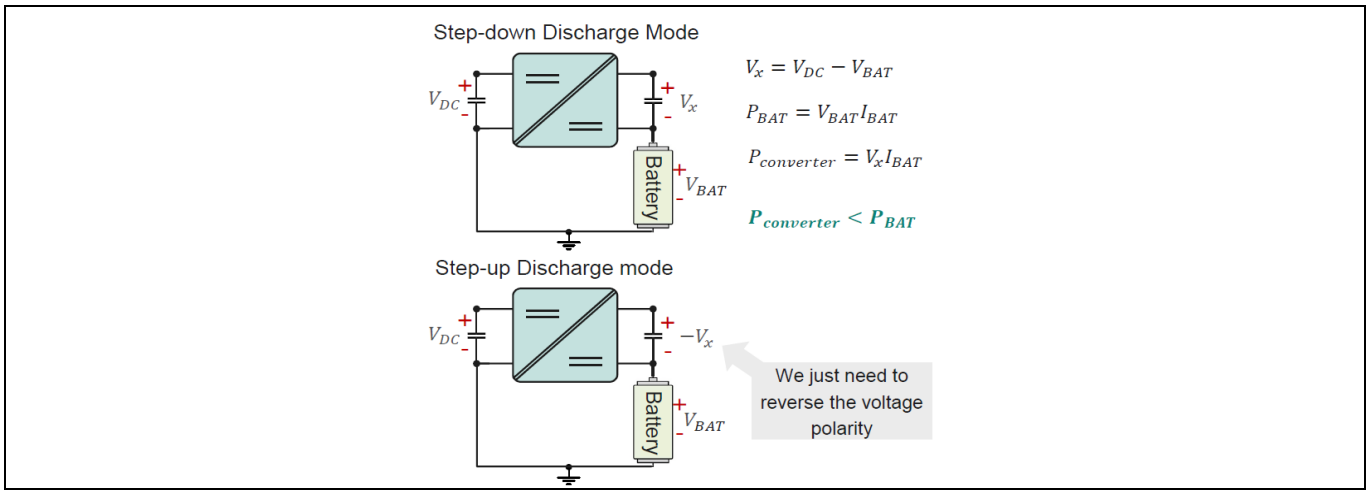

Figure 2 Partial power conversion in step-down and step-up operation

2.1 Inside the DP-CF-SUSD concept

At a functional level, the topology combines a bus-side bridge, a transformer-coupled current-fed bridge, and an inductor in the battery-to-bus path. Coordinated operation of the bridges controls the differential voltage contribution, while the inductor supports continuous current transfer. The same power stage supports both directions of energy flow.

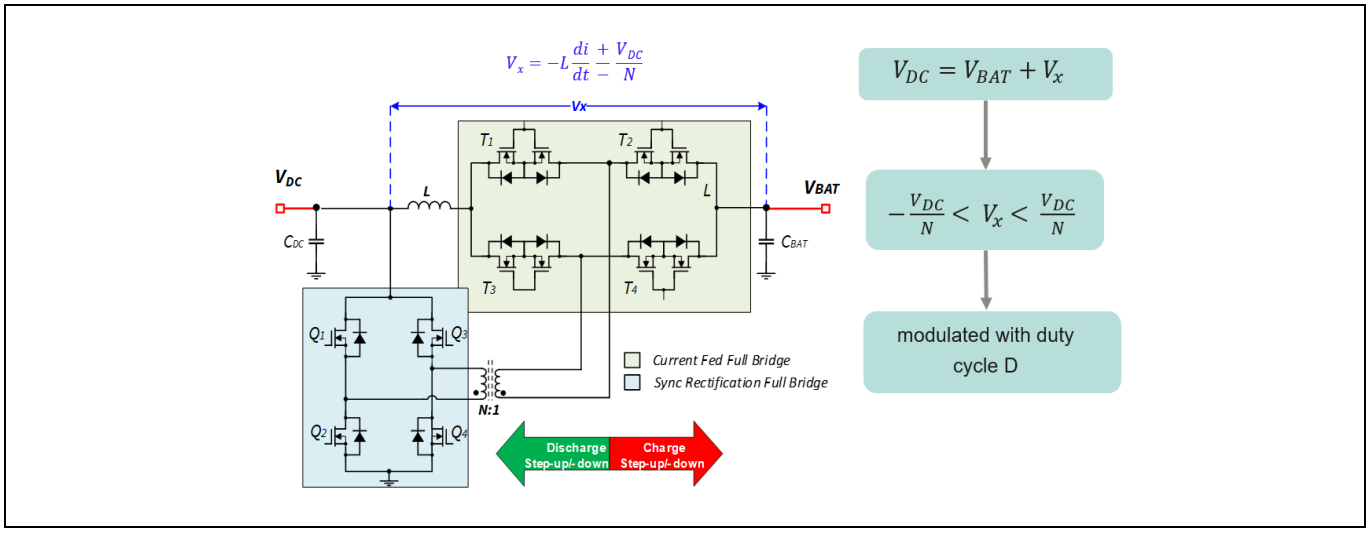

Figure 3 DP-CF-SUSD topology overview

2.2 Application challenges and topology benefits

Partial power processing is particularly relevant when the converter voltage gain requirement is close to 1. As the required voltage correction increases, the conversion stage handles a larger share of the transferred power. Actual efficiency also depends on current, switching losses, circulating energy, magnetics, and cooling; the partial-power ratio alone does not predict efficiency.

In AI data centers, a BBU located in or near the rack provides short-duration backup power within a constrained mechanical and thermal envelope. The nominal battery voltage is often close to the bus voltage, making partial power processing attractive for this application. If the system requires operation at an ambient temperature of 55°C, the cooling arrangement and component limits must be validated at that temperature; the results in this document do not establish a 55°C ambient rating.

Table 2 Application challenges

Application challenge	Design advantage	Topology benefit to the BBU
High power in limited space; demanding cooling conditions	Partial power processing reduces the active power handled by the conversion stage near the nominal voltage relationship	Potentially lower conversion losses and cooling demand, supporting compact integration
Battery voltage varies during charge and discharge	Bidirectional step-up and step-down capability use the same power stage	Bus regulation and battery charging without a separate charging converter
Fast load changes and ripple limits	Current-fed operation, closed-loop regulation, and interleaved phases	Supports controlled current transfer, lower combined ripple, and responsive bus regulation
Uneven loading and local thermal stress	Modular phases with active phase-current sharing	Distributes the load across power boards and supports balanced thermal loading

These benefits depend on the operating point and system implementation. The battery-to-bus path is non-isolated; detailed topology schematics, switching sequences, and design calculations are described in AN064535 [1].

3 System architecture and digital control

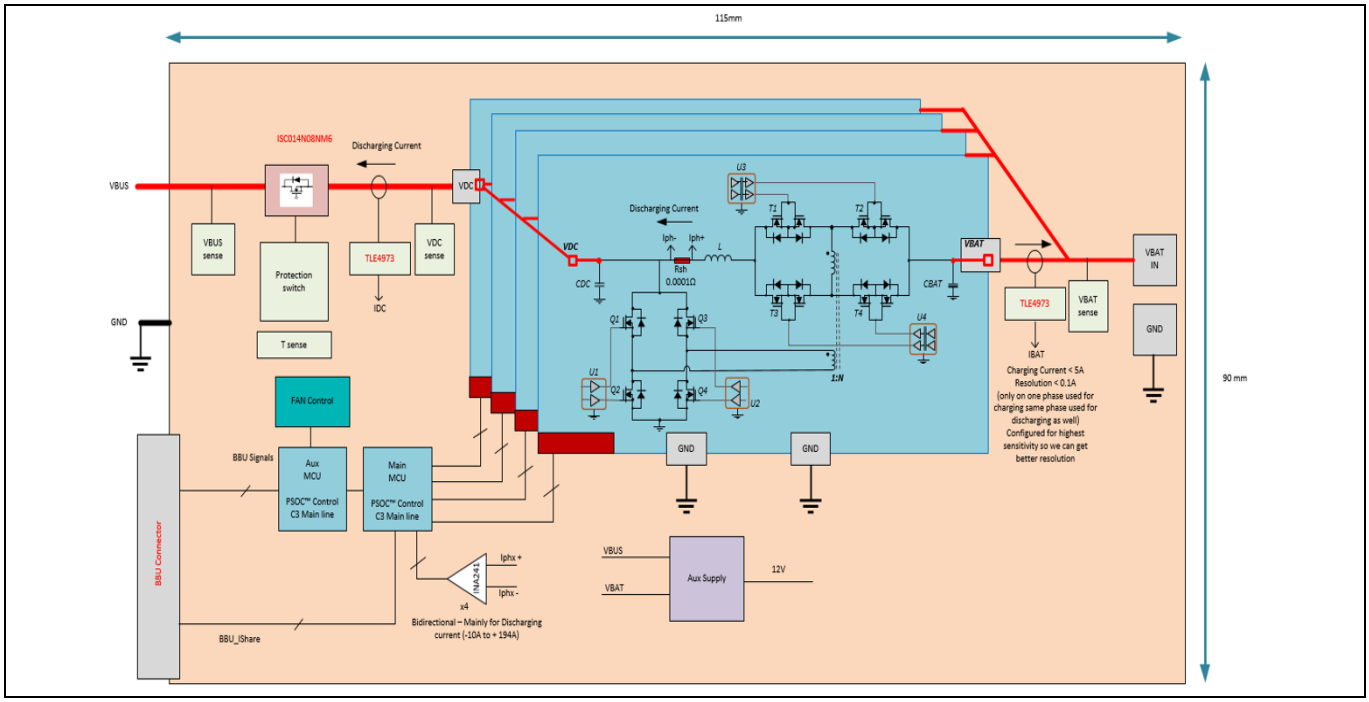

Figure 4 Four-phase BBU system block diagram (AN064535 [1], Figure 11)

3.1 Operating modes

- **Discharge:** Four interleaved phases deliver up to 12 kW total; phase-current control distributes the load
- **Charge:** One of the phase is used for battery charging and supports both CC and CV mode

3.2 Firmware and control

The main PSOC™ Control C3 MCU drives the power modules; a second MCU handles housekeeping and communication with systems such as the power supply unit (PSU) and battery management system (BMS). During discharge, the outer voltage loop generates the total current reference, which is distributed across the active phases. Each inner current loop regulates its phase current, supporting balanced load sharing. Interleaving reduces the combined ripple (see [1], sections 2 and 6).

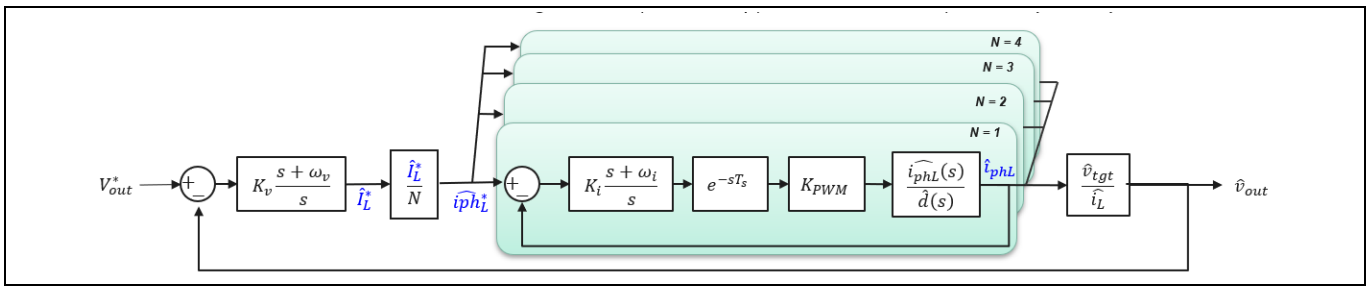

Figure 5 Dual-loop control structure (AN064535 [1], Section 6.3)

4 Experimental results

4.1 12 kW discharge demonstration

- **Four-phase buck operation:** Battery 52 V, bus 50 V, power 12 kW, and reported battery current 238 A
- **Cooling and duration:** 5.5 m/s airflow, no heatsink, and approximately 240 seconds of operation

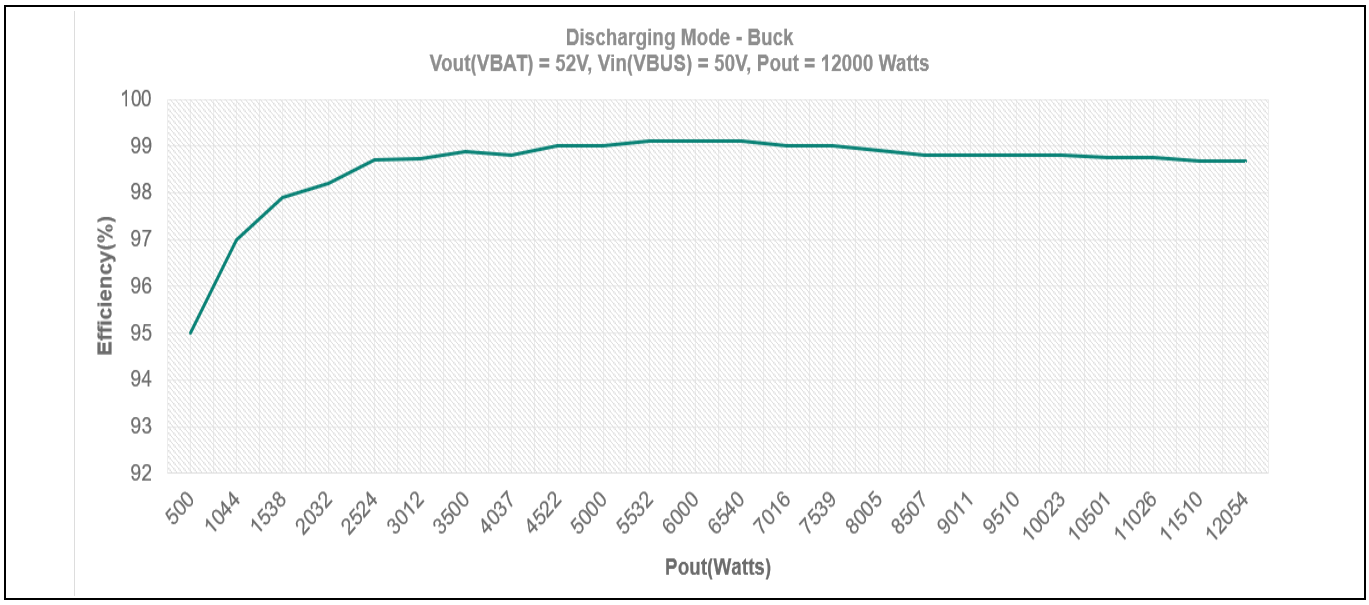

Figure 6 Discharge efficiency versus output power (AN064535 [1], Figure 63)

4.1.1 What the efficiency result shows

The measured curve provides a starting point for assessing conversion losses across the discharge load range at a battery voltage of 52 V and a bus voltage of 50 V. Peak efficiency of 99.1% is achieved: this includes the ORing FETs as well as apart from the DC-DC converter. Also, efficiency curve looks flat, which gives the benefit of high-efficiency operation at most of the operating power levels.

4.1.2 Translate the result into an evaluation target

Define the battery-voltage window, continuous and peak discharge power, charging profile, and cooling arrangement before testing. Measure the input and output power using clearly defined measurement boundaries and account for auxiliary power consumption consistently. Voltage-dependent efficiency sweeps are available in the full application note ([1], sections 7.3 to 7.5).

4.2 Full-power buck-mode thermal performance

The following thermal image was captured during the 12 kW, four-phase buck-mode demonstration. It shows the measured temperature distribution of the assembled board under the stated laboratory conditions (see [1], Section 7.3).

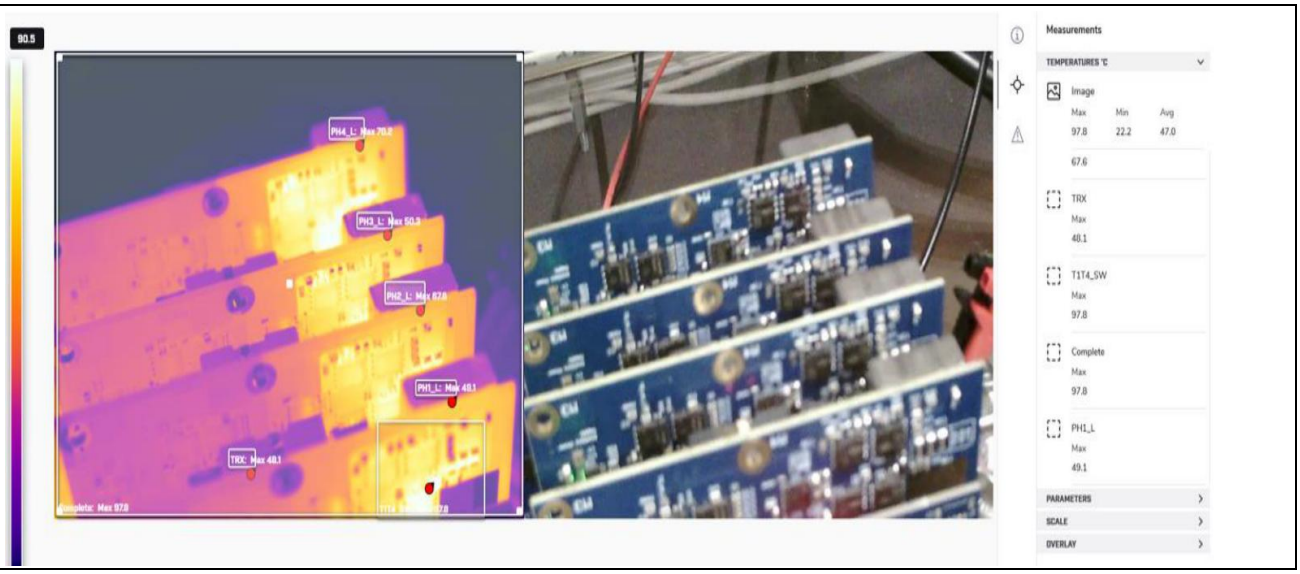

Figure 7 **Full-power buck thermal result (AN064535 [1], Figure 62). The original temperature scale and markers are retained**

Table 3 **Test parameters**

Test parameter	Reported condition
Operating mode	Four-phase discharge, buck
Battery/bus voltage	52 V/50 V
Output power/battery current	12 kW/238 A
Cooling	5.5 m/s airflow; no heatsink in this test
Test duration	Approximately 240 seconds

4.2.1 Thermal performance in context

This result supports evaluating the converter at full discharge power under a defined forced-air condition. Board orientation, airflow distribution, enclosure impedance, ambient temperature, and component limits must be checked in the customer's system.

4.3 Operating range and dynamic response

- **Discharge voltage sweep:** Operation at 12 kW with a 50 V bus was tested over battery voltages of 52 V to 59 V in buck mode and 40 V to 50 V in boost mode. Efficiency drops slightly as the difference between the battery voltage and required bus voltage increases; this is in line with the partial power concept
- **Worst-case thermal test:** At a battery voltage of 40 V, a bus voltage of 50 V, and an output power of 12 kW, the reported battery current was 316 A and the maximum observed temperature reached was 115°C with 5.5 m/s airflow and no heatsink. Therefore, low battery voltage requires particular attention to cooling and current stress
- **Charging:** One-phase CC/CV operation was demonstrated from 38 V to 54.8 V battery voltage with a 50 V bus and a 5 A maximum CC setting. The source also presents buck/boost charging efficiency and mode transition results. This test does not establish 12 kW charging capability (see [1], sections 7.7 to 7.9)
- **Load transient:** For one phase at 52 V battery voltage, a 50 V bus, and 2200 µF of bus capacitance, a 0 A to 60 A load step produced approximately ±0.8 V bus deviation at 0.1 A/µs and ±1.8 V at 2 A/µs see [1], Section 7.10)

4.3.1 Selected laboratory results at a glance

Table 4 Laboratory results

Demonstration	Reported result	Evaluation relevance
Discharge voltage sweep	12 kW; 50 V bus; battery 40 V to 59 V across buck and boost tests	Assess voltage-dependent losses and current stress
Single-phase charging	38 V to54.8 V battery; 50 V bus; 5 A maximum CC setting	Review CC/CV control and the required battery charging profile
Single-phase load step	0 A to 60 A at 0.1 A/µs: approximately ±0.8 V bus deviation	Baseline for a moderate slew-rate load change
Single-phase load step	0 A to 60 A at 2 A/µs: approximately ±1.8 V bus deviation	Check sensitivity to faster load changes

Both load-step cases use a 52 V battery, 50 V bus, and 2200 µF of bus capacitance.

Source: AN064535 [1], Section 7.10. Waveforms, measurement details, and additional operating cases are available in the full application note.

4.3.2 From laboratory results to a rack-level requirement

Specify the load-step amplitude and slew rate, allowable bus excursion, capacitance, and initial battery voltage before comparing results. Four-phase system dynamics, fault response, battery management interaction, and backup transfer behavior require system-level validation.

5 Summary

This document provides a practical reference for a modular 12 kW bidirectional BBU using partial power processing and coordinated digital control. It combines a scalable power stage, active phase-current sharing, and measured discharge, charging, and transient performance to support application-specific evaluation. If you want more information on the design, feel free to contact Infineon support/sales/FAE representative.

References

Note: *Contact Infineon support/sales/FAE representative to obtain this document.*

[1] Infineon Technologies AG: *AN064535 - Design and implementation of 48 V, 12 kW battery backup unit (BBU): Based on partial power converter (PPC)*

Revision history

Document revision	Date	Description of changes
V 1.0	2026-10-05	Initial release

Trademarks
All referenced product or service names and trademarks are the property of their respective owners.

Edition: 2026-10-05

Published by
Infineon Technologies AG
Am Campeon 1-15
85579 Neubiberg, Germany

© 2026 Infineon Technologies AG.
All rights reserved

Do you have a question about this document?
Email: erratum@infineon.com

Document reference:
AN065741

Important Notice

Products which may also include samples and may be comprised of hardware or software or both ("Product(s)") are sold or provided and delivered by Infineon Technologies AG and its affiliates ("Infineon") subject to the terms and conditions of the frame supply contract or other written agreement(s) executed by a customer and Infineon or, in the absence of the foregoing, the applicable Sales Conditions of Infineon. General terms and conditions of a customer or deviations from applicable Sales Conditions of Infineon shall only be binding for Infineon if and to the extent Infineon has given its express written consent.

For the avoidance of doubt, Infineon disclaims all warranties of non-infringement of third-party rights and implied warranties such as warranties of fitness for a specific use/purpose or merchantability.

Infineon shall not be responsible for any information with respect to samples, the application or customer's specific use of any Product or for any examples or typical values given in this document.

If this document is marked as 'Preliminary', 'Target', 'Draft' or 'Proposal', Infineon reserves the right to change all information given in this document at any time without notice. Subject to the development and release of a Product for series supply by Infineon, the technical specifications of the Product are set forth in the relevant datasheet provided by Infineon without such marking.

The data contained in this document is exclusively intended for technically qualified and skilled customer representatives. It is the responsibility of the customer to evaluate the suitability of the Product for the intended application and the customer's specific use and to verify all relevant technical data contained in this document in the intended application and the customer's specific use. The customer is responsible for properly designing, programming, and testing the functionality and safety of the intended application, as well as complying with any legal requirements related to its use.

Unless otherwise explicitly approved by Infineon, Products may not be used in any application where a failure of the Products or any consequences of the use thereof can reasonably be expected to result in personal injury. However, the foregoing shall not prevent the customer from using any Product in such fields of use that Infineon has explicitly designed and sold it for, provided that the overall responsibility for the application lies with the customer.

Infineon expressly reserves the right to use its content for commercial text and data mining (TDM) according to applicable laws, e.g. Section 44b of the German Copyright Act (UrhG).

If the Product includes security features:
Because no computing device can be absolutely secure, and despite security measures implemented in the Product, Infineon does not guarantee that the Product will be free from intrusion, data theft or loss, or other breaches ("Security Breaches"), and Infineon shall have no liability arising out of any Security Breaches.

If this document includes or references software:
The software is owned by Infineon under the intellectual property laws and treaties of the United States, Germany, and other countries worldwide. All rights reserved.

Therefore, you may use the software only as provided in the software license agreement accompanying the software.

If no software license agreement applies, Infineon hereby grants you a personal, non-exclusive, non-transferable license (without the right to sublicense) under its intellectual property rights in the software (a) for software provided in source code form, to modify and reproduce the software solely for use with Infineon hardware products, only internally within your organization, and (b) to distribute the software in binary code form externally to end users, solely for use on Infineon hardware products. Any other use, reproduction, modification, translation, or compilation of the software is prohibited.

For further information on the Product, technology, delivery terms and conditions, and prices, please contact your nearest Infineon office or visit https://www.infineon.com.