ILD8150/E 80 V high-side buck in constant voltage mode

Description, design guide

About this document

Scope and purpose

ILD8150/E 80 V is a high-side LED buck regulator with an integrated MOSFET optimized for constant output current. The IC can operate in constant voltage with elementary feedback change. This document explains how to convert the feedback loop. The solution can be used in many industrial and telecom solutions with an absolute maximum voltage of up to 80 V.

Intended audience

This document is intended for engineers and students who design industrial DC-DC buck.

Table of contents

About this document **1**
Table of contents **1**
1 Introduction **2**
1.1 Voltage regulation 2
Revision history **4**

1 Introduction

This application note explains the operation of Infineon's high-side MOSFET buck LED driver IC ILD8150 in constant voltage mode. It's possible to switch the IC into constant voltage mode in a simple way. The circuit is shown in **Figure 1**.

The resistive divider R1 and R2 set the output voltage.

R_{OCP} and D_{OCP} are responsible for overcurrent protection.

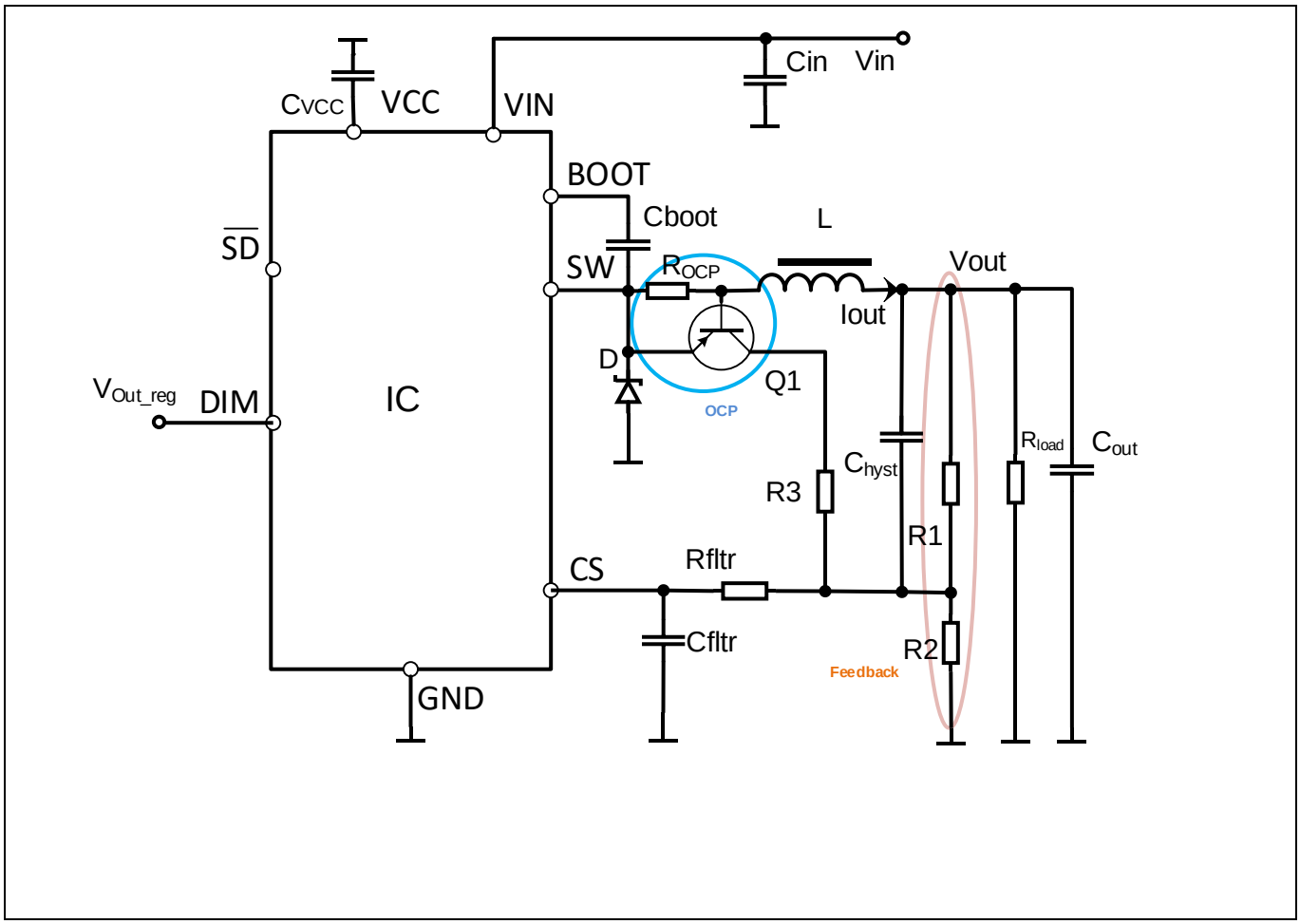

Figure 1 ILD8150 in voltage mode

1.1 Voltage regulation

Figure 1 shows the typical application circuit. The output voltage is controlled by the CS pin, which compares the voltage drop on R2 to internal references. The output voltage is proportional to the voltage drop on R2. When the CS voltage drops below V_{CSL}, the MOSFET switches on. The output voltage and voltage on R2 rise accordingly. When the CS voltage achieves V_{CSH}, the MOSFET switches off, and the stored energy in inductor L discharges through diode D. This way, the system maintains a constant average output voltage as shown in **Figure 2**.

$V_{out} = \frac{(V_{CSH}+V_{CSL})\cdot(R_1+R_2)}{2R_2}$, the typical V_{CSH} is 390 mV, V_{CSL} is 330 mV accordingly.

Introduction

Through changing the PWM signal on the V_{Out_reg} pin, it is possible to regulate the output voltage. Since a hysteretic buck needs voltage ripple at the CS pin, using a pure resistive divider (such as R1 and R2) would lead to a high output voltage ripple of 17 percent. C_{hyst} was used to inject ripples into the feedback loop to avoid this effect and reduce output voltage ripple. Select R3, so that the voltage on the CS pin never goes beyond the CS absolute maximum voltage range. The switching frequency mostly depends on the inductance L and the capacitance C_{hyst}.

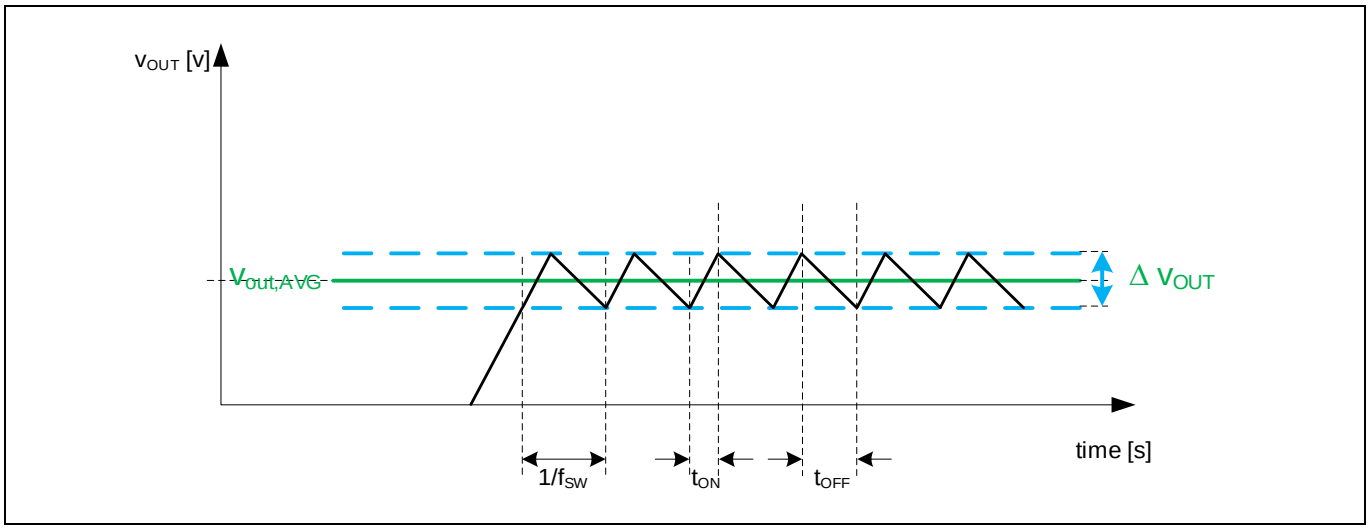

Figure 2 Voltage regulation

If short circuit protection is needed, it can be implemented by means of R_{OCP}, Q_1 and R3. R_{OCP} is a shunt used to measure the output current and trigger at I_{OCP} level.

$$R_{OCP} = \frac{V_{BE}}{I_{OCP}}$$

V_{BE} is a bipolar junction transistor (BJT) base-emitter voltage, typically 0.6 V, at which the BJT starts conducting. If the voltage on the shunt is higher than V_{BE}, the BJT conducts and pulls up the CS pin through R3, up to V_{CSH} level. So, the protection switches the high-side MOSFET off. V_{BE} varies over temperature range and over different BJT types. Select the shunt that overcurrent protection would never trigger at normal operating conditions. The BJT breakdown voltage must be higher than V_{IN} .

Please refer to the **ILD8150/ILD8150E datasheet** for more information.

Revision history

Document version	Date of release	Description of changes
V 1.0	2021-09-07	First release

Trademarks
All referenced product or service names and trademarks are the property of their respective owners.

Edition 2021-09-07

Published by

Infineon Technologies AG

81726 Munich, Germany

© 2021 Infineon Technologies AG. All Rights Reserved.

Do you have a question about this document?

Email: erratum@infineon.com

Document reference
AN_2104_PL39_2104_115540

IMPORTANT NOTICE

The information contained in this application note is given as a hint for the implementation of the product only and shall in no event be regarded as a description or warranty of a certain functionality, condition or quality of the product. Before implementation of the product, the recipient of this application note must verify any function and other technical information given herein in the real application. Infineon Technologies hereby disclaims any and all warranties and liabilities of any kind (including without limitation warranties of non-infringement of intellectual property rights of any third party) with respect to any and all information given in this application note.

The data contained in this document is exclusively intended for technically trained staff. It is the responsibility of customer's technical departments to evaluate the suitability of the product for the intended application and the completeness of the product information given in this document with respect to such application.

For further information on the product, technology, delivery terms and conditions and prices please contact your nearest Infineon Technologies office (**www.infineon.com**).

WARNINGS

Due to technical requirements products may contain dangerous substances. For information on the types in question please contact your nearest Infineon Technologies office.

Except as otherwise explicitly approved by Infineon Technologies in a written document signed by authorized representatives of Infineon Technologies, Infineon Technologies' products may not be used in any applications where a failure of the product or any consequences of the use thereof can reasonably be expected to result in personal injury.