Application Note AN-1127

DC Bus and ADC Offset Compensation for IRMCF/K300 Series Motor Control IC

By Benjamin Poiesz, International Rectifier
April 2, 2007
Version 1.1

Table of Contents

INTRODUCTION **2**

POTENTIAL HAZARDS **2**

ADC OFFSET COMPENSATION **3**

EXTERNAL REFERENCE FOR IFBK OP-AMPS **4**

EXTERNAL REFERENCE FOR AINX **3**

PERFORMING COMPENSATION CALCULATIONS **4**

EXTERNAL VOLTAGE PROTECTION **5**

This application note describes how to properly and safely use the IRMCF/K300 series to measure and regulate the DC Bus voltage. Two compensation methods are outlined to improve measurement accuracy involving the Analog-to-Digital converter. By following these methods the ADC will allow DC Bus measurements to be accurate within a few volts, rather than tens of volts. These same techniques can also be applied to non-DC Bus voltage measurements for more accurate results across all of the ADC inputs.

Introduction

The IRMCF/K300 series motor controllers utilize an internal Analog-to-Digital converter for numerous important system parameters. This ADC, like all others, experiences offset in its measurements. These offsets can be amplified in measurement situations such as the DC Bus Voltage. With a small input range of 0-1.2V being potentially amplified into the 300-400V range, a small 10mV offset could result in DC Bus measurement errors of 10V. Having such an offset may not only affect ADC performance, but rotor angle estimation, PFC, and field-weakening capability as well. These effects can be minimized through the use of an external reference for offset compensation.

IRMCF/K300 series controllers have a single Analog-to-Digital converter, which is multiplexed for motor current feedback, as well as DC Bus measurements. A second multiplexer is employed to provide customer configurable ADC measurements. One of these configurable 'AINx' pins can be used for offset compensation through an external reference. A separate technique employs the differential amplifiers used for current feedback to reference an external source to compensate ADC measurements. Because these inputs route to the same ADC, an offset measurement made on one channel can be applied across the system.

It is preferable to use the first technique with AINx input instead of the current feedback scheme. Using an AINx pin instead of current feedback ensures that no noise it inadvertently coupled into current feedback measurements. A decision diagram is shown below.

Compensation Type	Advantage	Disadvantage
AINx input (Recommended Method)	Low cost, no performance degradation, can use already present 1.8V supply	Requires one AINx pin
Current Feedback (Ifbck Op-Amps)	Does not require an AINx pin	Higher cost for external non-switch mode reference, possible noise coupling to Ifbck with switch mode reference

Table 1. Compensation Comparison

Potential Hazards

In the case of non-PFC equipped models there is no real danger created by incorrect DC Bus measurements. The worst-case situation would be the controller detecting an under or over-voltage condition on the DC Bus and turning off. In the case of PFC equipped controllers, an offset in DC Bus measurement will cause the system to regulate improperly. This regulation offset, if left unchecked, could breach the limits of the bus capacitors and cause a catastrophic failure. It is also important to note that the techniques

outlined in the application note will directly control the PFC regulation (in PFC equipped systems), and if improper compensation is applied the bus voltage may be significantly different than expected.

ADC Offset Compensation

This technique utilizes an external reference to compensate for any offset present in the ADC. This offset can be realized by sampling an accurately known reference source with the ADC. The difference between the measured and actual voltages will result in the offset of the ADC. This value can be then subtracted from the DC Bus to yield a considerably more accurate measurement and regulation point for PFC equipped systems.

Two methods are described to use an external reference as compensation. The first utilizes a differential op-amp used for current feedback, where an external reference is supplied by a dedicated source. The second uses an available AINx pin to use the 1.8V voltage supply rail as a reference. The benefit of using the already present 1.8V supply is that a dedicated external reference is not required, but the accuracy will not be a good as with an external reference chip.

External Reference for AINx

A good place to acquire a moderately accurate voltage reference is directly from the output of a switch-mode power supply. The IRMCF/K300 series controllers require a 1.8V supply, and this can be used as a reference for DC Bus measurements. This compensation will rely on the accuracy of the chosen power supply, but any 2% regulator will be sufficient. An external reference should be used if even greater accuracy is required.

In its simplest form a voltage divider can be implemented to bring the 1.8V supply within the 1.2V measurement range (Figure 2). This voltage reference point is important in achieving an accurate DC Bus measurement. The reference point should be equivalent to the voltage the ADC will receive when the DC Bus is at its target operating point, although a 0.6V generic reference is also acceptable.

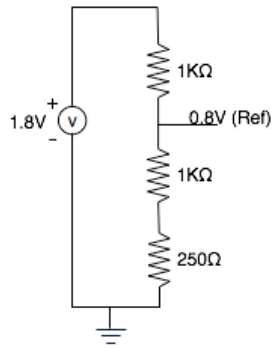

Figure 2.

For example, the gain between the DC Bus voltage and ADC is 0.00243 (as it is in IRMCF/K Development Kits). If the nominal DC Bus voltage were 350V, then a voltage reference of 0.851V should be used (Equation 1). The algorithm to implement this compensation method is covered in the next section.

*'Nominal Bus' * 'Bus to ADC Gain' = Target Reference*
*350V * 0.00243 = 0.851V*
Equation 1.

External Reference for Ifbk Op-Amps

This voltage source can then be used for the differential op-amp reference already in place for motor current feedback (Figure 1). Using an external reference connected to R2 will allow for the output voltage of the differential op-amp to be 0.6V when no current is present. The ADC would then measure this output, where an offset from the ideal reference (0.6V) can be calculated. This offset can then be applied as compensation to DC Bus measurements. The algorithm to provide this offset calculation can be implemented in the MCE.

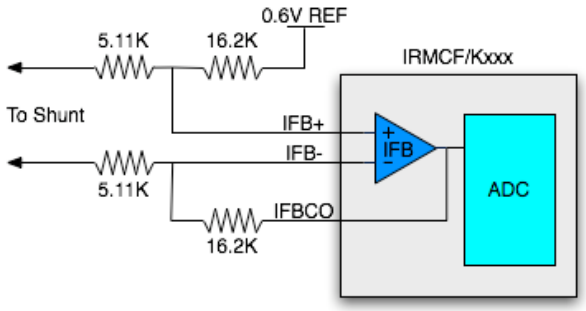

Figure 1.

Performing Compensation Calculations

Now that a reference voltage is supplied to the ADC, the controller must calculate the real DC Bus voltage. This process can be implemented in either the MCE or in the 8051 side of the controller. This application note covers implementing these offset calculations in the MCE. Figure 3 illustrates how the entire solution can be realized within the MCE for the AINx based compensation method.

In this example ADC channel 6 is used as the compensation input. Its value will first go through a low-pass filter to remove any system noise. Next a compensation value will be subtracted from this measurement. The compensation value is the ADC reference target value in digital counts (Equation 2). This subtraction will yield the offset value of the ADC. Then by subtracting this offset from the raw DC Bus voltage measurement the compensated bus voltage is created. This compensated voltage can then be connected to anywhere the raw bus voltage would be.

*('Reference Voltage' / 1.2V) * 4095 = 'Compensation'*
*(0.851 / 1.2) * 4095 = 2904*
Equation 2.

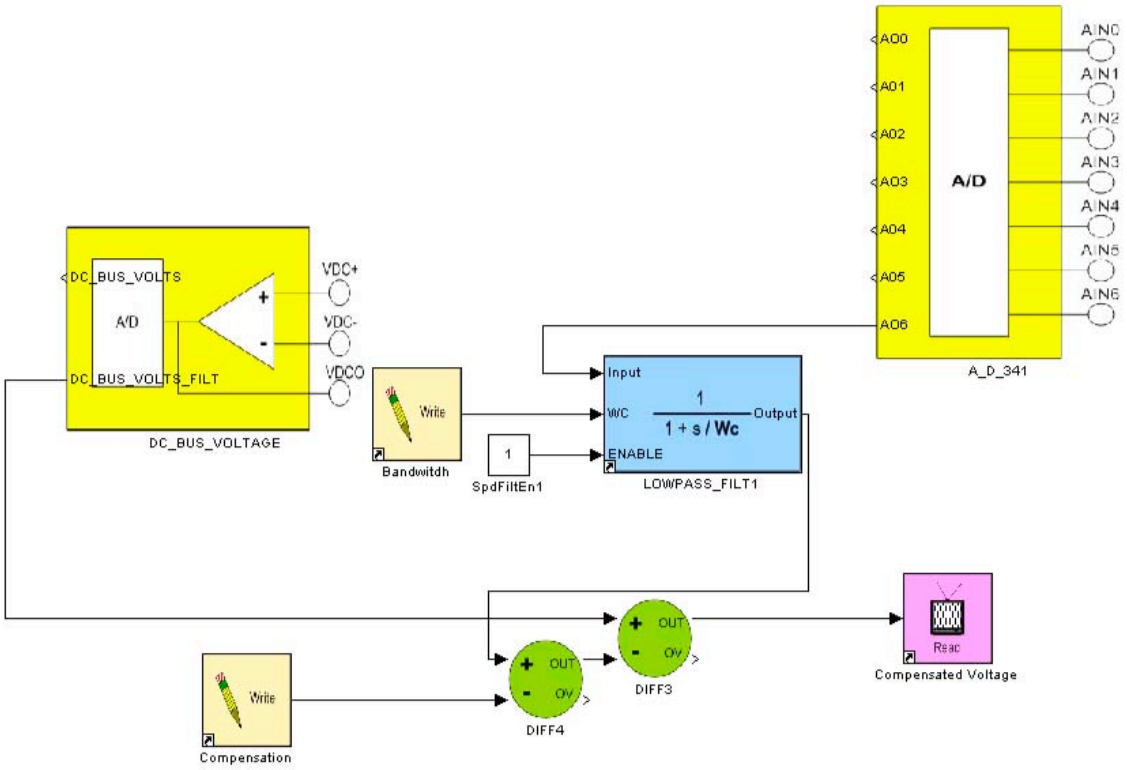

Figure 2. AINx based MCE Compensation

External Voltage Protection

If a variable DC Bus voltage is not an issue in a particular application, or you do not have an available ADC input for compensation, an external over-voltage protection should be employed instead. Because the OVP in the controller relies on the ADC for accuracy, the system may not properly shut down in the event of an over voltage. By designing an external comparator to signal the controller when an over voltage has occurred (either through general digital input or interrupt) potential safety issues can be mitigated. The same can be implemented for under-voltage protection if necessary. This method though will only prevent system damage and does not improve the ability to read DC Bus voltages.