EconoDUAL™ 3 Wave

Application and installation notes

About this document

Scope and purpose

This application note provides guidelines on how to use and implement EconoDUAL™3 Wave modules. An upgrade of the well-established EconoDUAL™3 package with a ribbon-bond structure on the backside significantly improves the thermal performance with an open, liquid-cooled heat sink.

Please read through this document before designing with EconoDUAL™3 Wave modules.

Intended audience

This application note is for all experts involved in handling the EconoDUAL™3 Wave modules. It is a guide to help technicians, design engineers, and assembly workers understand and properly use the module technology.

Table of contents

About this document **1**
Table of contents **2**
1 General information **3**
1.1 General document information 3
1.2 General application information 4
1.3 Handling of electrostatic-sensitive components 4
2 The recommended mounting order **5**
3 Assembly instructions for PCBs on PressFIT modules **6**
3.1 Requirements for PressFIT circuit boards 6
3.2 The press-in process 6
3.3 Press-in tools 6
3.4 The press-in force 6
4 Requirements for the module heat sink **7**
4.1 Reference heat sink design 8
All datasheet values related to the thermal performance were evaluated using the heat sink shown in Figure 3. 8
4.2 Recommendation for the sealing ring 8
4.3 Cooling fluid 9
4.4 Pressure drop and maximum pressure (Δp, p_{max}) 10
5 Mounting the module to the heat sink **11**
5.1 Screws to mount the module to the heat sink 11
5.2 Clamping of the module while screwing in the baseplate 11
5.3 Mounting the module to the heat sink 11
5.4 Additional fixing of the printed circuit board 11
6 Connecting bus bars to power terminals **12**
7 Mechanical loads (vibration and shock) **12**
8 Storage and transportation of IGBT modules **12**
9 Climatic conditions during active, current-carrying operation of EconoDUAL™3 Wave modules **12**
References **13**
Revision history **14**
Disclaimer **15**

1 General information

1.1 General document information

EconoDUAL™3 Wave modules belong to the EconoDUAL™3 package. Therefore, the information provided in AN2006-05—EconoDUAL™3 – mounting instruction [1] is valid for EconoDUAL™3 Wave modules, unless otherwise specified in this application note.

Table 1 lists the chapters in this document along with the application note in which detailed information can be found. Chapters referencing AN2006-05 are in Green and chapters described in this document are in White.

Table 1 Overview of the referencing of the single chapter/subchapter

Chapter	Sub-chapter	AN number
1. General information	1.2 General application information	AN 2006-05
	1.3 Handling of electrostatic sensitive components	AN 2006-05
2. Recommended mounting order		AN 2022-05
3. Assembling instructions for PCB´s on Press-FIT modules	3.1 Requirements for the Press-FIT printed circuit boards	AN 2006-05
	3.2 The press-in process	AN 2006-05
	3.3 Press-in tool	AN 2006-05
	3.4. Press-in forces	AN 2006-05
4. Requirements for the module cooling system	4.1 Reference heat sink design	AN 2022-05
	4.2 Recommendation for the sealing ring	AN 2022-05
	4.3 Cooling fluid	AN 2022-05
	4.4 Pressure drop and maximum pressure (Δp, p_{max})	AN 2022-05
5. Mounting the module to the heat sink	5.1 Screws to mount the module to the heat sink	AN 2006-05
	5.2 Fixation/clamping of the module during the baseplate screw process	AN 2022-05
	5.3 Mounting the module to the heat sink	AN 2006-05
	5.4 Additional fixing of the printed circuit board	AN 2006-05
6. Connecting bus bars to power terminals		AN 2006-05
7. Mechanical loads (vibration and shock)		AN 2006-05
8. Storage and transportation of IGBT modules		AN 2006-05
9. Climatic conditions during active, current-carrying operation of EconoDUAL™3 Wave modules		AN 2006-05

1.2 General application information

The general application information for EconoDUAL™3 Wave modules is provided in AN2006-05—EconoDUAL™3 - Mounting instruction.

1.3 Handling of electrostatic-sensitive components

Detailed information on handling electrostatic-sensitive components is provided in AN2006-05—EconoDUAL™3 - Mounting instruction.



Figure 1: Electrostatic discharge symbol.

2 The recommended mounting order

All datasheet drawings specify power modules at the state of delivery. Deformations can occur when the power module is mounted on a cooling system (depending on the flatness of the heat sink and the screw torque.)
To avoid deformations, the following mounting order is recommended:

1. Align the PCB to the power module.
2. Connect the PCB to auxiliary terminals, a controlled-force and press-in process is recommended.
3. Prepare the heat sink with a sealing ring.
4. Attach the power module with the PCB, to the prepared heat sink.
5. Screw the module baseplate on to the heat sink.
6. Screw the PCB on to the power module.
7. Connect the module power terminals to the bus bar, capacitor, etc.

3 Assembly instructions for PCBs on PressFIT modules

3.1 Requirements for PressFIT circuit boards

Detailed requirements for PressFIT circuit boards are provided in AN2006-05—EconoDUAL™3 - Mounting instruction.

3.2 The press-in process

The press-in process for EconoDUAL™3 Wave modules is described in AN2006-05—EconoDUAL™3 - Mounting instruction.

3.3 Press-in tools

Recommendations for suitable mounting tools are provided in AN2006-05—EconoDUAL™3 - Mounting instruction.

When developing a press-in tool, the position and height of the wave area on the module baseplate must be considered. The position and height of the wave area on the baseplate of EconoDUAL™3 Wave modules can be obtained from the current datasheet of the modules.

Please note that 3D models of EconoDUAL™3 Wave modules can be requested through normal Infineon channels.

3.4 The press-in force

The press-in force for EconoDUAL™3 Wave modules is described in AN2006-05—EconoDUAL™3 - Mounting instruction.

4 Requirements for the module heat sink

The heat sink design has a great impact on the overall cooling performance, which is a combination of thermal resistance/impedance, pressure drop, and cooling flow rate. To get specifications of all these thermal-related products, a reference heat sink, where the given measured values are valid, is needed.

Strictly avoid the following during the mounting process:

- Any damage to the baseplate
- Mechanical deformation and contamination of the heat sink
- Scratches or other damages to the sealing region i.e. the contact region between the sealing ring and the baseplate

For sealing and heat sink design, the wave area and the wave height must be considered. Both these values are given in the datasheet. Figure 2 shows the wave position and height of a heat sink module based on the values given in the datasheet.

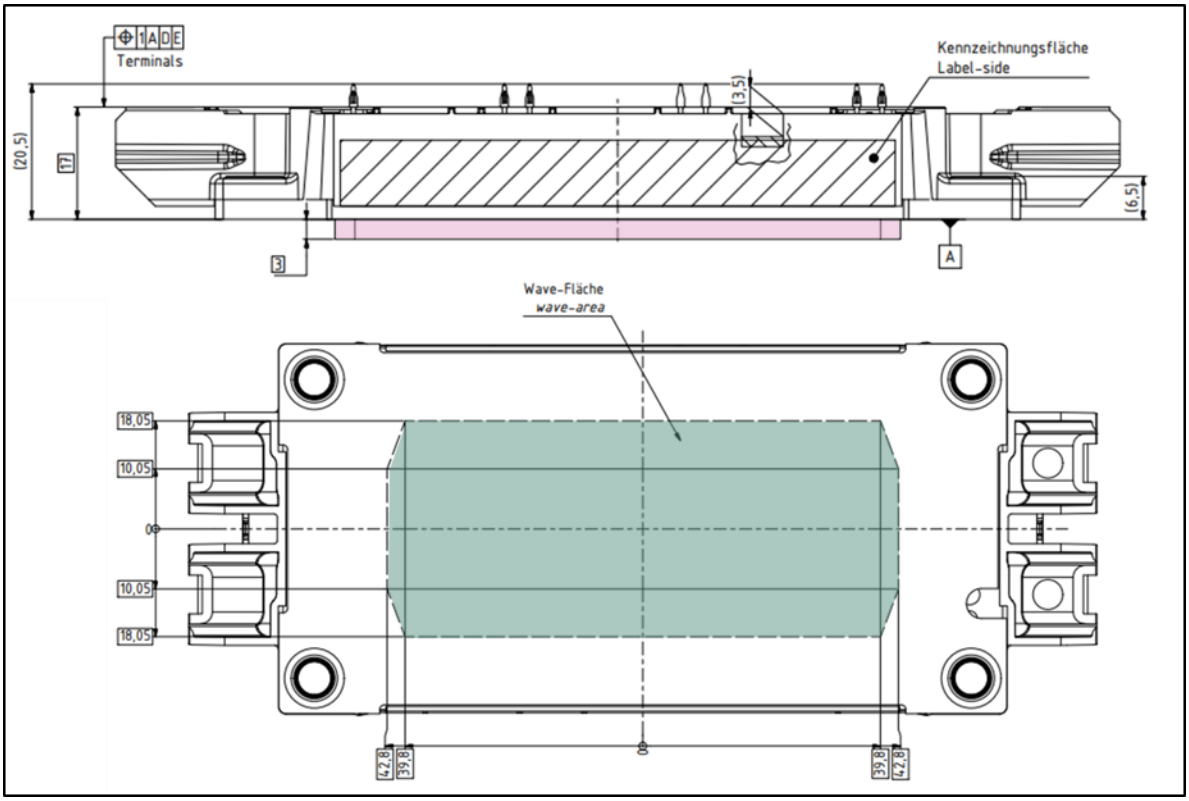

Figure 2: Example of the wave area (green) position and height (red) of the FF900R12ME7W_B11

4.1 Reference heat sink design

All datasheet values related to the thermal performance were evaluated using the heat sink shown in Figure 3.

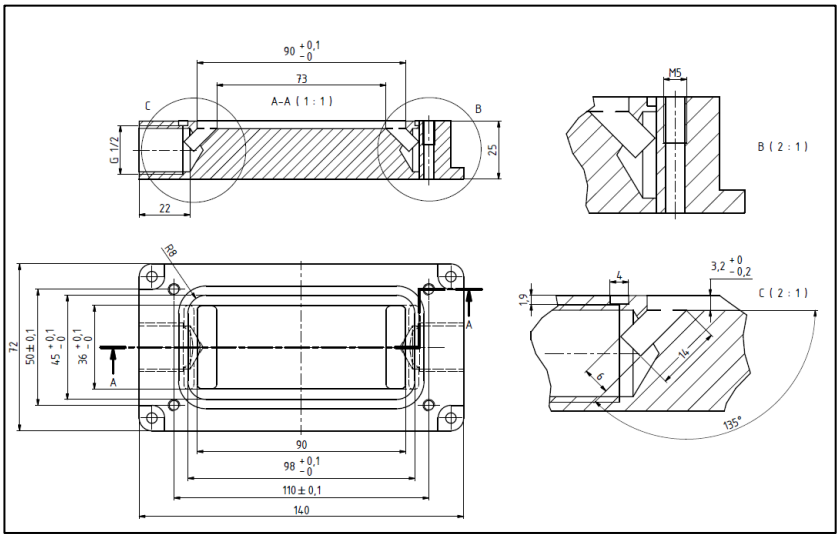

Figure 3: Drawing of the reference heat sink used, for R_{thJF}[1] measurement

A computer-aided design (CAD) model of the reference heat sink, as shown in Figure 3, can be requested through normal Infineon channels. This heat sink design is a reference design and must be used only for testing. Customers are obligated to design and qualify their own heat sink solutions.

4.2 Recommendation for the sealing ring

Infineon recommends using a sealing ring to ensure a proper connection between module and heat sink. General recommendations for specific sealing rings cannot be provided because the power module is only one part in the entire cooling system. The designer of the application (cooling system) is responsible for selecting the sealing ring.

[1] R_{thJF} measurements for the EconoDUAL™ 3 Wave modules at Infineon Technologies AG are performed according to AQG 324.[2].

4.3 Cooling fluid

Typically, the cooling fluid used for power modules is a mixture of water and ethylenglycol[1]. This fluid mixture has to provide enough anti-freeze for application conditions. Conditions in which this liquid might freeze, must be strictly avoided. Frozen fluid can lead to plastic deformation in the power module baseplate resulting in fluid leakage and/or isolation failure.

It is also important to ensure that the fluid type with its corrosion protection is compatible with the material of the heat sink and the baseplate. Incompatible fluid types can damage the cooling circuit in a short time. Please consult your cooler fluid manufacturer for more information about its specific material compatibility.

General recommendations for a specific cooling fluid cannot be provided because the power module is only one part in the entire cooling system. Consider the following aspects also while choosing a suitable cooling fluid:

- The coolant fluid with its corrosion protection must be compatible with the Aluminium in the heat sink and the Nickel plating over the copper module baseplate
- Other parts in the cooling system must also be compatible with the fluid type (e.g. Zinc screws and Chrome parts are typically not allowed in the cooling system)
- The fluid mixture must provide enough anti-freeze for application conditions.

At Infineon, typically, for power module tests where cooling is required, (e.g. thermal characterization, power cycling tests) BASF Glysantin™ G30™ with organic-acid-technology (OAT) silicate-free corrosion protection is applied. A known effect of this combination with the EconoDUAL™3 Wave module is a chemical reaction between its aluminium wave area and the corrosion protection of the Glysantin™ G30™ (see Figure 4.) The aluminum cooling structure may appear black after the test. This reaction of the organic corrosion protection is a known effect for this coolant type and has no negative influence on the thermal performance, pressure drop, or aging of the module.

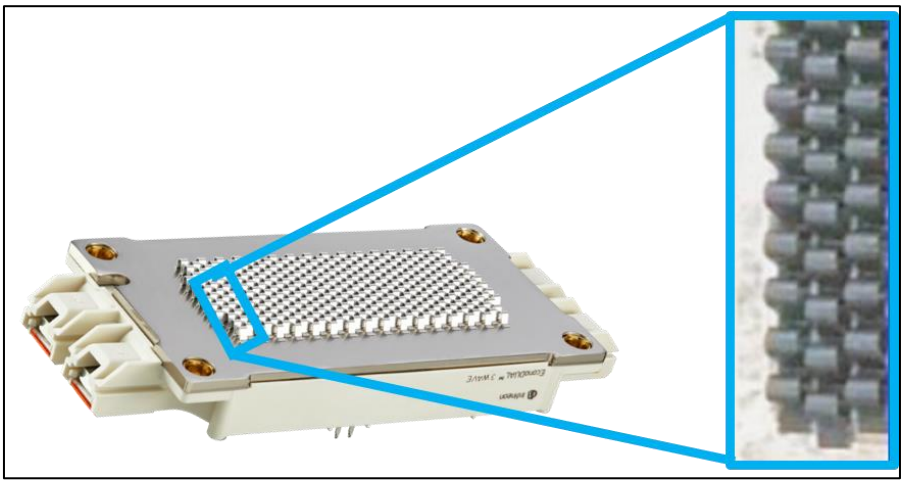

Figure 4: Visual effect without affecting performance on an EconoDUAL™3 Wave module after long term tests with the G30™ fluid

[1] A mixture of 50% water and 50% ethylenglycole was used to determine the datasheet values.

4.4 Pressure drop and maximum pressure (Δp, p_{max})

The characteristic pressure drop (Δp) in the cooling circuit of the direct fluid-cooled modules is an important parameter when designing the cooling system, especially the cooling pump. The pressure drop given in the datasheet is for typical cooling conditions and the reference heat sink shape that is described in chapter 4. All pressure values specified are relative to the atmospheric pressure.

Exceeding the specified maximum pressure in a cooling circuit (p_{max}), as defined in the datasheet, is NOT recommended even for test procedures. Exceeding the maximum pressure may bend the baseplate and lead to a leakage in the cooling circuit and/or damage the insulation parts.

5 Mounting the module to the heat sink

5.1 Screws to mount the module to the heat sink

Detailed recommendation for screws that can be used in EconoDUAL™3 Wave modules is provided in AN2006-05—EconoDUAL™3 - Mounting instruction.

5.2 Clamping of the module while screwing in the baseplate

Unlike in the standard EconoDUAL™3 module, it is recommended that the power module be clamped to the heat sink during the screwing in process for the EconoDUAL™3 Wave modules. This will prevent the tilting of the module that can possibly damage (i.e. plastic deformation) the baseplate, wave area, and sealing ring.

After the power module (with PCB) is placed onto the heat sink, the module should be clamped to the z axis of the module with a force of **F_{Cmax} = 600 N (300 N per AC/DC terminal)**. Clamping can be performed in the area where the power terminals are located (see Figure 5.) Ensure that the PCB or the pins are not pushed down further during the clamping.

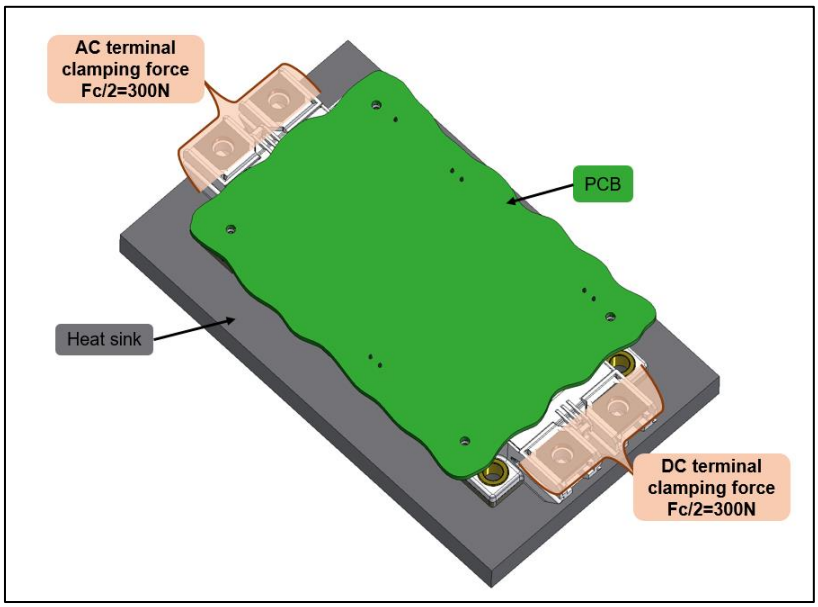

Figure 5: Area where the module can be clamped/held down to the cooling system.

5.3 Mounting the module to the heat sink

The mounting order and parameters for EconoDUAL™3 Wave modules are provided in AN2006-05—EconoDUAL™3 - Mounting instruction.

5.4 Additional fixing of the printed circuit board

Recommendations for fixing the printed circuit board on EconoDUAL™3 Wave modules are provided in AN2006-05—EconoDUAL™3 - Mounting instruction.

6 Connecting bus bars to power terminals

Recommendations for connecting bus bars to the power terminals of EconoDUAL™3 Wave modules are provided in AN2006-05—EconoDUAL™3 - Mounting instruction.

7 Mechanical loads (vibration and shock)

Recommendations for the maximum allowed mechanical load on EconoDUAL™3 Wave modules are provided in AN2006-05—EconoDUAL™3 - Mounting instruction.

8 Storage and transportation of IGBT modules

Recommendations for storage and transportation of EconoDUAL™3 Wave modules are provided in AN2006-05—EconoDUAL™3 - Mounting instruction.

9 Climatic conditions during active, current-carrying operation of EconoDUAL™3 Wave modules

The climatic conditions during active, current-carrying operation of EconoDUAL™3 Wave modules are described in AN2006-05—EconoDUAL™3 – Mounting instruction.

References

[1] AN2006-05—EconoDUAL™3 - Mounting instruction. www.infineon.com

[2] ZVEI AQG 324: ECPE Guideline, Qualification of Power Modules for Use in Power Electronics Converter Units in Motor Vehicles. Edition 03.1/2021. https://www.ecpe.org/research/working-groups/automotive-aqg-324/

Revision history

Document revision	Date	Description of changes
1.0	12/05/2022	Initial version

Trademarks
All referenced product or service names and trademarks are the property of their respective owners.

Edition 2022-05-12

Published by

Infineon Technologies AG

81726 Munich, Germany

© 2022 Infineon Technologies AG. All Rights Reserved.

Do you have a question about this document?

Email: erratum@infineon.com

Document reference
AN 2022-05

Important notice

The information contained in this application note is given as a hint for the implementation of the product only and shall in no event be regarded as a description or warranty of a certain functionality, condition or quality of the product. Before implementation of the product, the recipient of this application note must verify any function and other technical information given herein in the real application. Infineon Technologies hereby disclaims any and all warranties and liabilities of any kind (including without limitation warranties of non-infringement of intellectual property rights of any third party) with respect to any and all information given in this application note.

The data contained in this document is exclusively intended for technically trained staff. It is the responsibility of customer's technical departments to evaluate the suitability of the product for the intended application and the completeness of the product information given in this document with respect to such application.

Warnings

Due to technical requirements products may contain dangerous substances. For information on the types in question please contact your nearest Infineon Technologies office.

Except as otherwise explicitly approved by Infineon Technologies in a written document signed by authorized representatives of Infineon Technologies, Infineon Technologies' products may not be used in any applications where a failure of the product or any consequences of the use thereof can reasonably be expected to result in personal injury.