CIPOS™ Tiny IPM

IM323 Series application note

About this document

Scope and purpose

This application note describes the IM323 product group of the CIPOS™ Tiny intelligent power module (IPM) family and the basic requirements for operating these products in a recommended mode. This application note also discusses integrated components such as IGBTs and gate driver ICs, and necessary external circuitry design such as bootstrapping or interfacing.

Intended audience

Power electronics engineers who want to design reliable and efficient CIPOS™ Tiny IM323 series applications.

Table of contents

About this document **1**
Table of contents **1**
1 Overview **3**
1.1 Product line-up 4
1.2 Nomenclature 4
2 Internal components and package technology **5**
2.1 Power transistor technology, 600 V TRENCHSTOP™ RC-D2 Series 5
2.2 Control IC – 600 V, 6-channel gate driver IC 5
2.3 Thermistor 5
2.4 Package technology 6
3 Product overview **7**
3.1 Internal circuit and features 7
3.2 Maximum electrical ratings 8
3.3 Electrical characteristics 9
3.4 Input and output pins 11
3.5 Outline drawing 14
3.6 Marking 16
4 Interface circuit and layout guide **17**
4.1 Input signal connection 17
4.2 Internal dead time 18
4.3 Cross-conduction prevention circuitry 18
4.4 Advanced input filter 19
4.5 Matched propagation delay 20
4.6 General interface circuit example 21
4.7 Recommended rated output current of the power supply 22
4.8 Recommended layout pattern for the overcurrent protection (OCP) and short-circuit protection (SCP) functions 23
4.9 Recommended wiring of the shunt resistor and snubber capacitor 23
4.10 Pin and screw-hole coordinates for the IM323 footprint 24

5 Protection features 26
5.1 Undervoltage protection 26
5.2 Overcurrent protection 27
5.2.1 Timing chart of overcurrent (OC) protection 27
5.2.2 Selecting current-sensing shunt resistor 28
5.2.3 Delay time 29
5.2.4 Short-circuit safety operation area (SCSOA) characteristics 30
5.3 Fault-output circuits 30
5.4 Sleep function 31
5.5 Temperature monitor and thermal protection 32
6 Bootstrap circuit 34
6.1 Bootstrap circuit operation 34
6.2 Characteristics of internal bootstrap functionalities 34
6.3 Initial charging of the bootstrap capacitor 34
6.4 Selecting the bootstrap capacitor 35
6.5 Charging and discharging of the bootstrap capacitor during a PWM inverter operation 35
7 Thermal system design 37
7.1 Introduction 37
7.2 Power losses 38
7.2.1 Conduction losses 38
7.2.2 Switching losses 38
7.3 Thermal impedance 39
7.4 Temperature rise considerations and calculation example 40
7.5 Heat sink selection 41
7.5.1 Required heat sink performance 41
7.5.2 Heat sink characteristics 41
7.5.2.1 Heat transfer from the heat source to the heat sink 42
7.5.2.2 Heat transfer within the heat sink 42
7.5.2.3 Heat transfer from heat sink surface to ambient 42
7.5.3 Selecting a heat sink 44
8 Mounting and soldering method 45
8.1 Electrical spacing 45
8.2 Mounting the heat sink 46
8.2.1 General guidelines 46
8.2.1.1 Recommended tightening torque 46
8.2.1.2 Tightening screws in the heat sink 48
8.2.1.3 Mounting the screw 48
8.2.1.4 Thermal performance under various mounting torques 49
8.3 Soldering conditions 49
8.3.1 Wave soldering 49
8.3.2 Manual soldering 50
9 Package handling guidelines 52
9.1 Storage guidelines 52
9.1.1 Recommended storage conditions 52
9.2 Packing specification 53
10 References 54
Revision history 55

1 Overview

Integrating discrete power semiconductors and gate driver ICs into one package helps design engineers reduce the time and effort required on designing. To meet the increasing demand for smaller size and higher power density, Infineon Technologies AG has developed a new family of highly integrated IPMs that contain nearly all semiconductor components required to drive electronically controlled variable-speed electric motors. They incorporate a 3-phase inverter power stage with a SOI gate driver and Infineon's leading-edge 600 V TRENCHSTOP™ RC-D2 IGBT.

This application note discusses the following products:

- IM323-L6G – standard version
- IM323-L6G2 – short-terminal version

IM323 is a product group of the CIPOS™ Tiny IPM family that is designed for motor drives in home appliance such as air-conditioners, washing machines, and fan drives; low power general-purpose inverters (GPI); and pump applications.

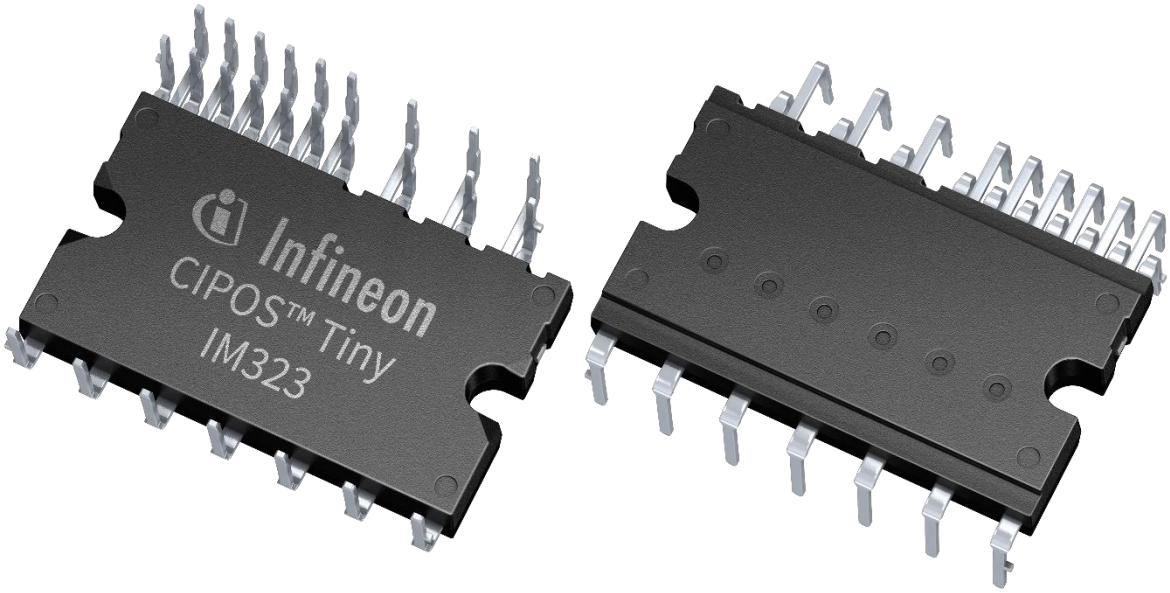

1.1 Product line-up

Table 1 Line-up of the IM323 products

Part number	Rating		Topologies	Package	Isolation voltage [Vrms]	Main applications
	Current [A]	Voltage [V]				
IM323-L6G	15	600	3ϕ bridge open emitter	Fully molded dual in-line (DIL) module	2000 Vrms/60 Hz (sinusoidal, 1 min. All pins shorted – heat sink)	Air-conditioners, washing machines, and pumps
IM323-L6G2	15					

1.2 Nomenclature

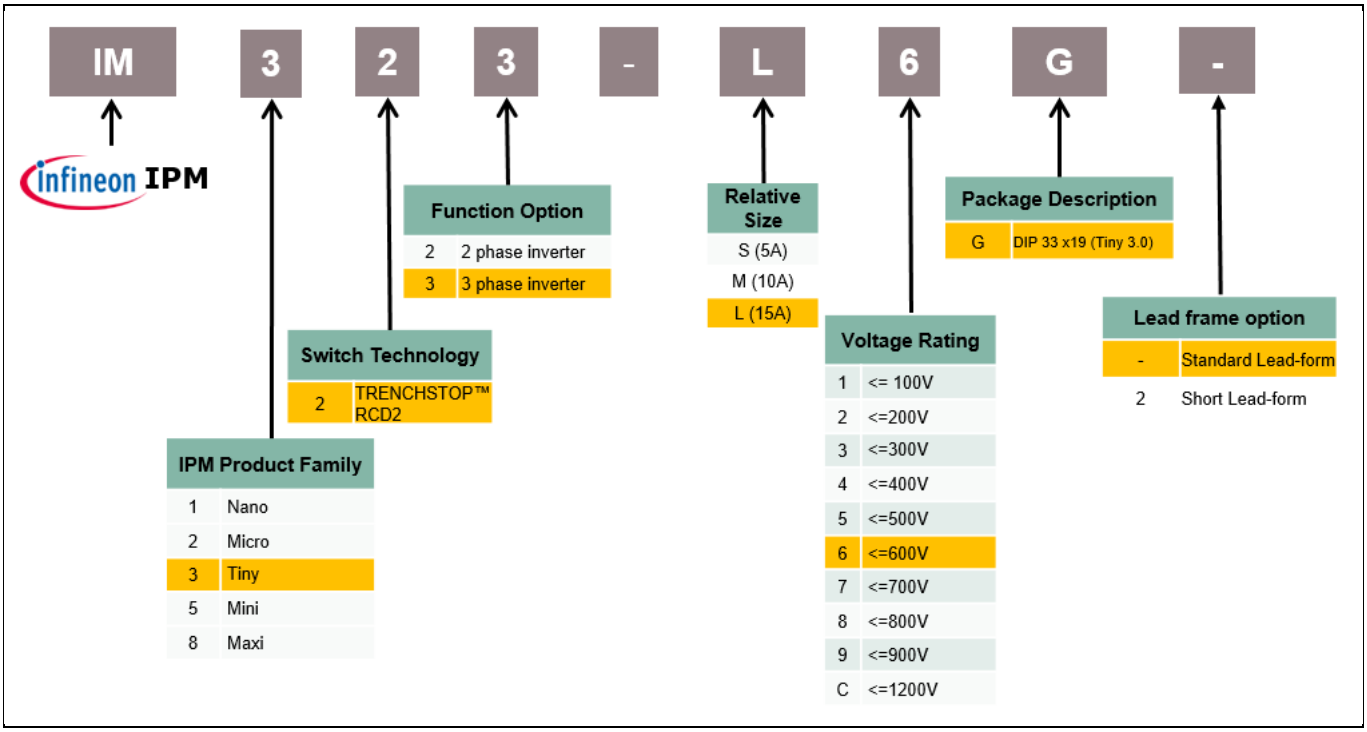

Figure 1 Nomenclature of the IM323 product group

2 Internal components and package technology

2.1 Power transistor technology, 600 V TRENCHSTOP™ RC-D2 Series

Infineon technologies introduced the TRENCHSTOP™ RC-D2 technology in 2020 [1]. The 600 V RC-D2 is the successor of the RC-DF IGBT. The diode is monolithically integrated with IGBT which makes this technology suited for consumer drives. The current rating of the diode was optimized to make this product even more competitive in terms of price and performance.

2.2 Control IC – 600 V, 6-channel gate driver IC

The basic feature of the C5SOI technology is the separation of the active silicon from the base material through a buried silicon oxide layer. This buried silicon oxide provides an insulation barrier between the active layer and the silicon substrate, and greatly reduces the parasitic capacitance. This insulation barrier also disables leakage or latch-up currents between adjacent devices. It prevents the latch-up effect even in cases of high dv/dt switching under elevated temperature, thereby improving robustness.

Additionally, the thin-film SOI technology provides benefits such as lower power consumption and higher immunity to radioactive radiation or cosmic rays [2]. A monolithic, single control IC for all six IGBTs provides further advantages such as bootstrap circuitry, matched propagation delay times, built-in dead time, and cross conduction prevention. All the six IGBTs turn-off under fault situations such as undervoltage lockout or overcurrent.

2.3 Thermistor

In the IM323 series, the thermistor is integrated in the internal PCB. The thermistor is connected between the V_{OT} and V_{SS} pins. A circuit design using the thermistor for over temperature protection is discussed in Section 5.5.

Table 2 Raw data of the thermistor used in the IM323

T [°C]	$R_{min.}$ [kΩ]	$R_{typ.}$ [kΩ]	$R_{max.}$ kΩ]	Tol. [%]	T [°C]	$R_{min.}$ [kΩ]	$R_{typ.}$ [kΩ]	$R_{max.}$ [kΩ]	Tol. [%]
-40	2662.29	2962.54	3262.79	5.8	45	34.52	36.51	38.50	3.5
-35	1925.31	2133.69	2342.08	5.6	50	28.40	29.97	31.55	3.4
-30	1407.19	1553.41	1699.64	5.4	55	23.49	24.74	25.99	3.3
-25	1038.95	1142.63	1246.31	5.3	60	19.52	20.52	21.51	3.2
-20	774.50	848.75	923.00	5.1	65	16.30	17.10	17.90	3.1
-15	582.69	636.37	690.05	5.0	70	13.67	14.32	14.96	3.0
-10	442.25	481.41	520.57	4.8	75	11.52	12.04	12.56	2.9
-5	338.49	367.30	396.11	4.7	80	9.75	10.17	10.59	2.8
0	261.16	282.54	303.91	4.5	85	8.28	8.63	8.97	2.7
5	203.06	219.04	235.02	4.4	90	7.06	7.35	7.63	2.7
10	159.04	171.08	183.12	4.3	95	6.05	6.28	6.51	2.6
15	125.45	134.59	143.72	4.2	100	5.20	5.39	5.58	2.5
20	99.63	106.61	113.58	4.0	105	4.47	4.64	4.81	2.6
25	79.64	85.00	90.36	3.9	110	3.86	4.01	4.16	2.7
30	64.06	68.20	72.35	3.8	115	3.34	3.48	3.62	2.8
35	51.83	55.06	58.29	3.7	120	2.90	3.02	3.15	2.8
40	42.18	44.71	47.24	3.6	125	2.53	2.64	2.75	2.9

2.4 Package technology

The CIPOS™ Tiny IM323 offers the smallest size while providing high power density of up to 600 V, 15 A by using the TRENCHSTOP™ RC-D2 with a 6-channel, gate drive IC. The IM323 contains all power components such as the IGBTs and isolates them from each other and the heat sink. All low-power components such as the gate drive IC and thermistor are assembled on a PCB.

The electric insulation is provided by the mold compound. To further decrease the thermal impedance, the internal lead-frame design is optimized [3]. Figure 2 shows the external view of the CIPOS™ Tiny IM323 package.

The two dummy pins on the package side, which fix the inner PCB, have no connection with the internal circuit. This means that the dummy pins have no electrical function and are isolated in the package.

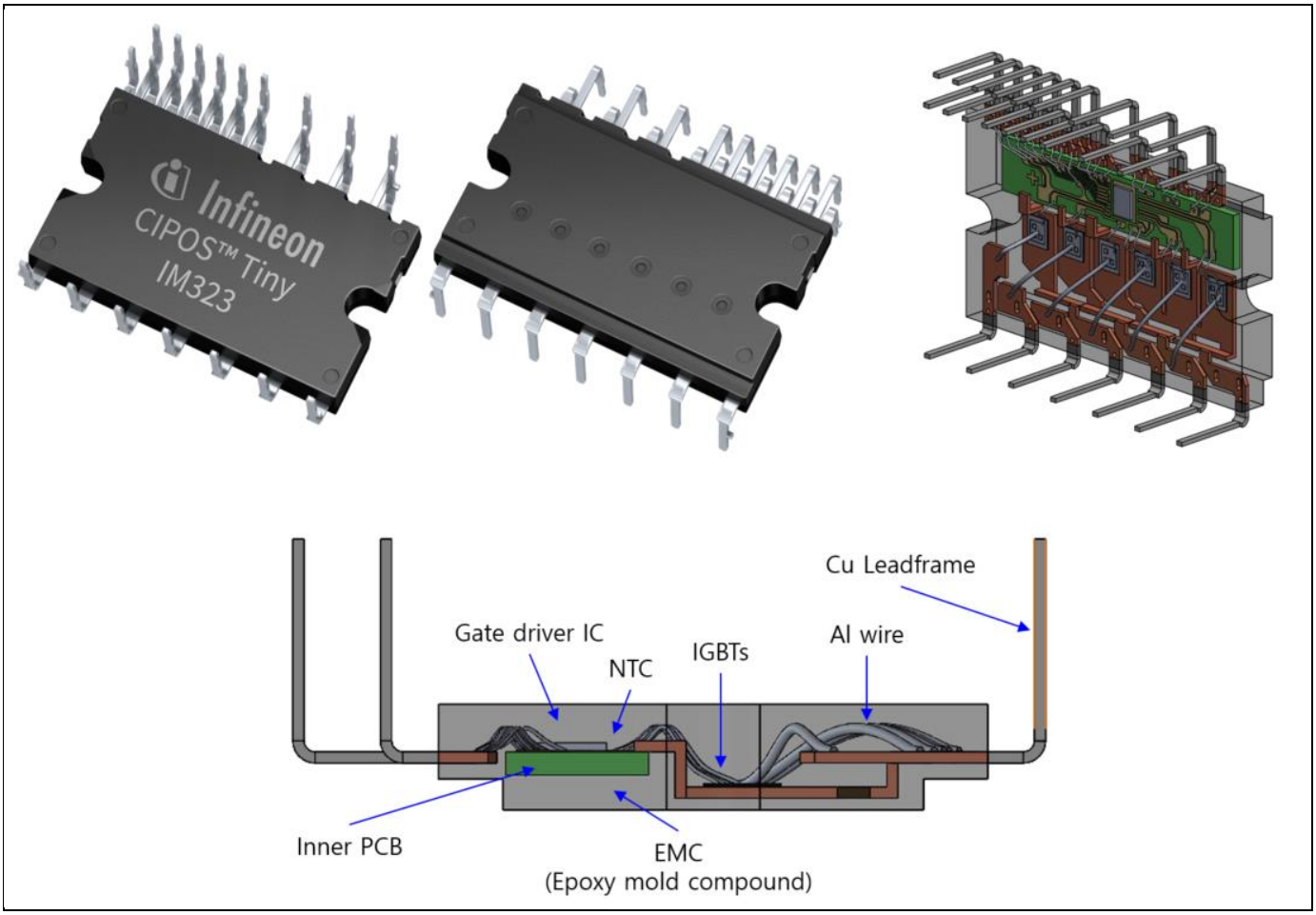

Figure 2 External view and internal structure of the IM323 packages (DIP 33x19)

3 Product overview

3.1 Internal circuit and features

Figure 3 illustrates the internal block diagram of the IM323. It consists of a 3-phase inverter circuit and a gate driver IC with control functions.

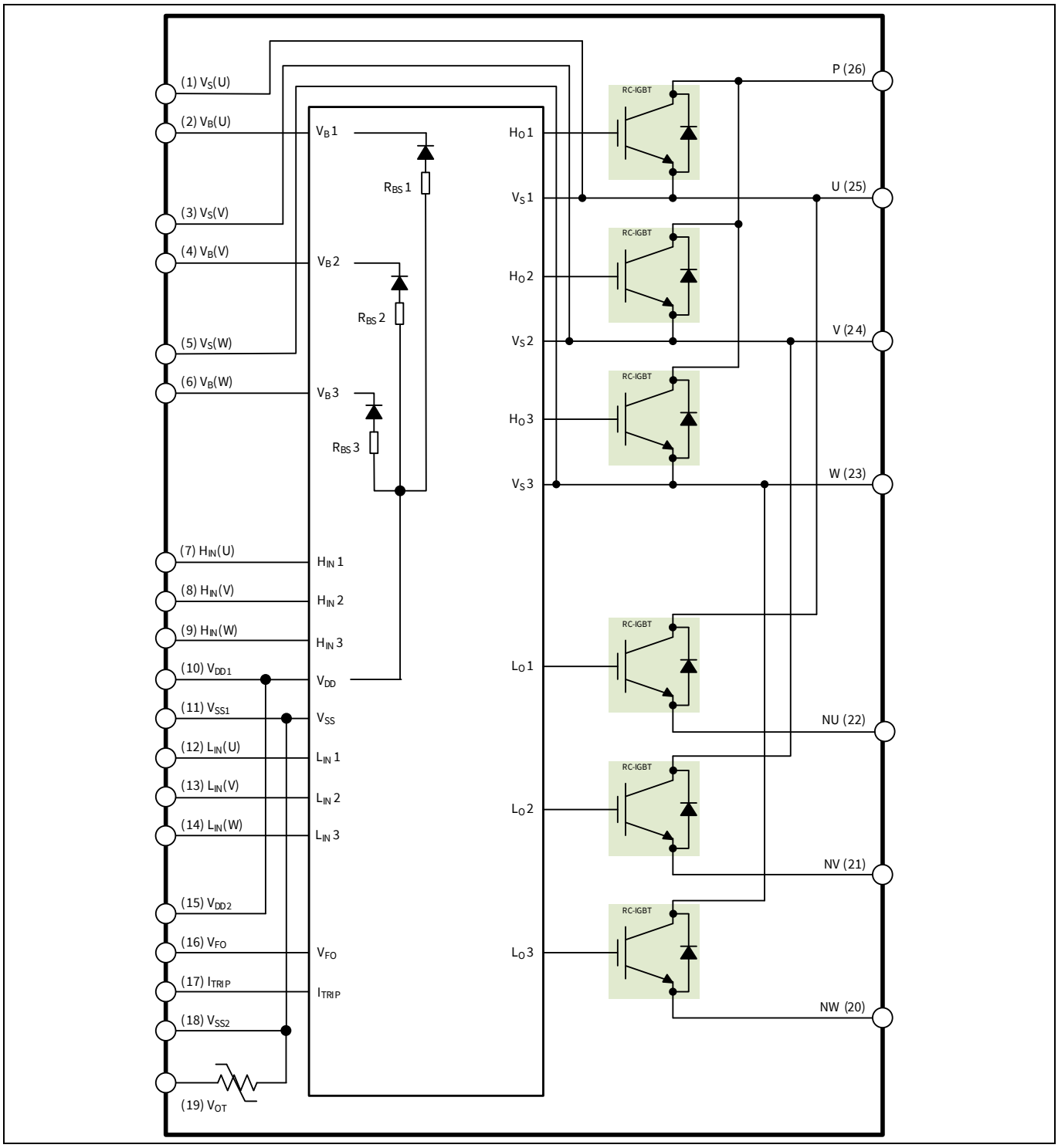

Figure 3 Internal circuit of the IM323 (3-phase inverter with open emitter)

The IM323 has the following features and integrated functions:

Features

- 600 V/15 A rating in one physical package size (mechanical layouts are identical)
- Fully-isolated, dual in-line (DIL) molded module
- Infineon's reverse conduction IGBTs (RC-D2) with monolithic body diode
- Rugged SOI gate driver technology with stability against transient and negative voltage
- Integrated bootstrap functionality
- Matched delay times of all channels/built-in dead time
- RoHS compliant lead-free terminal plating

Functions

- Overcurrent shutdown
- Built-in, UL-certified negative temperature coefficient (NTC) thermistor for temperature monitoring
- Undervoltage lockout at all channels
- Low-side emitter pins accessible for current monitoring
- Cross-conduction prevention
- All six switches turn off during protection

3.2 Maximum electrical ratings

Table 3 Detailed description of absolute maximum ratings for the IM323-L6G

Item	Symbol	Rating	Description
Max. blocking voltage	V_{CES}	600 V	The sustained collector-emitter voltage of internal IGBTs
DC collector current	I_C	± 15 A	The allowable IGBT DC collector current at T_C = 25°C, limited by junction temperature
Junction temperature	T_J	-40 ~ 150°C	Considering temperature ripple on the power chips, the maximum junction temperature rating of the IPM is 150°C
Operating case temperature range	T_C	-40 ~ 125°C	T_C (case temperature) is defined as the temperature of the package surface underneath the specified power chip. To get the accurate temperature information, please mount a temperature sensor on the heat sink surface at the defined position shown in Figure 4
Maximum junction temperature	$T_{J,switch,\ max}$	175°C	The maximum junction temperature rating of built-in power chips is 175°C under this condition: max 10 sec, every 10 min, max 1 hour cumulative over their lifetime
Isolation voltage	V_{ISO}	2000 V	60 Hz, sinusoidal, AC 1 minute, between all connected pins and the heat sink plate If stepped-shaped heat sinks are used to enlarge the clearance (over 3.0 mm) between the terminals and the heat sink, an isolation voltage over **2500** Vrms can also be observed. See Figure 5.

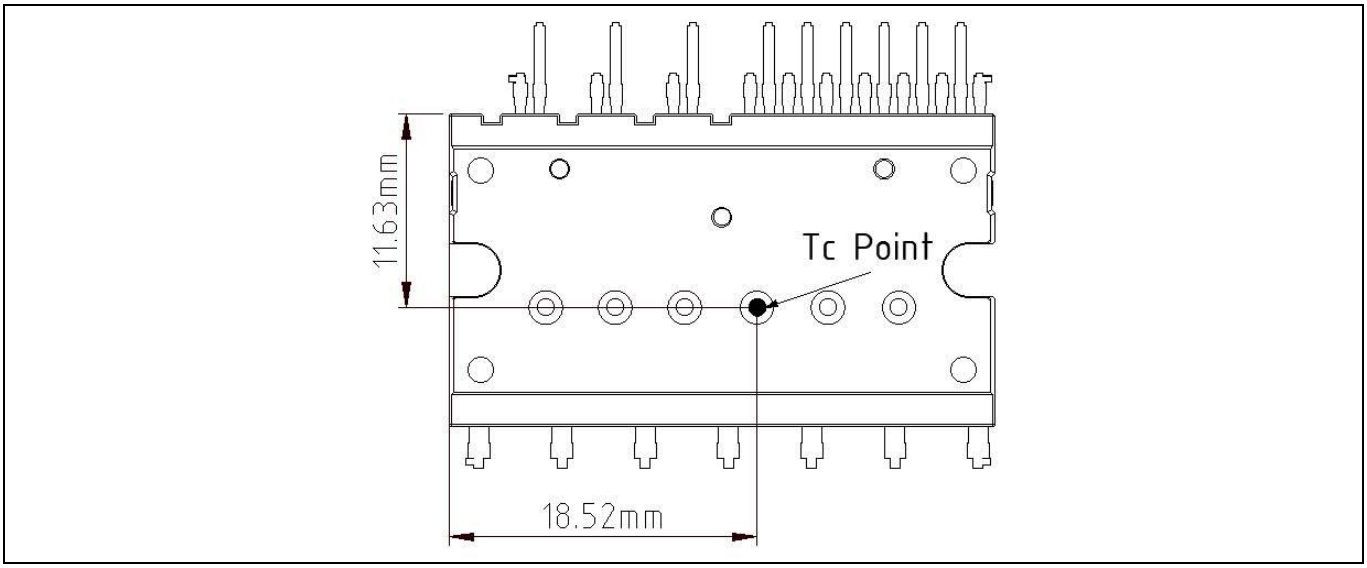

Figure 4 T_C measurement point in millimeters

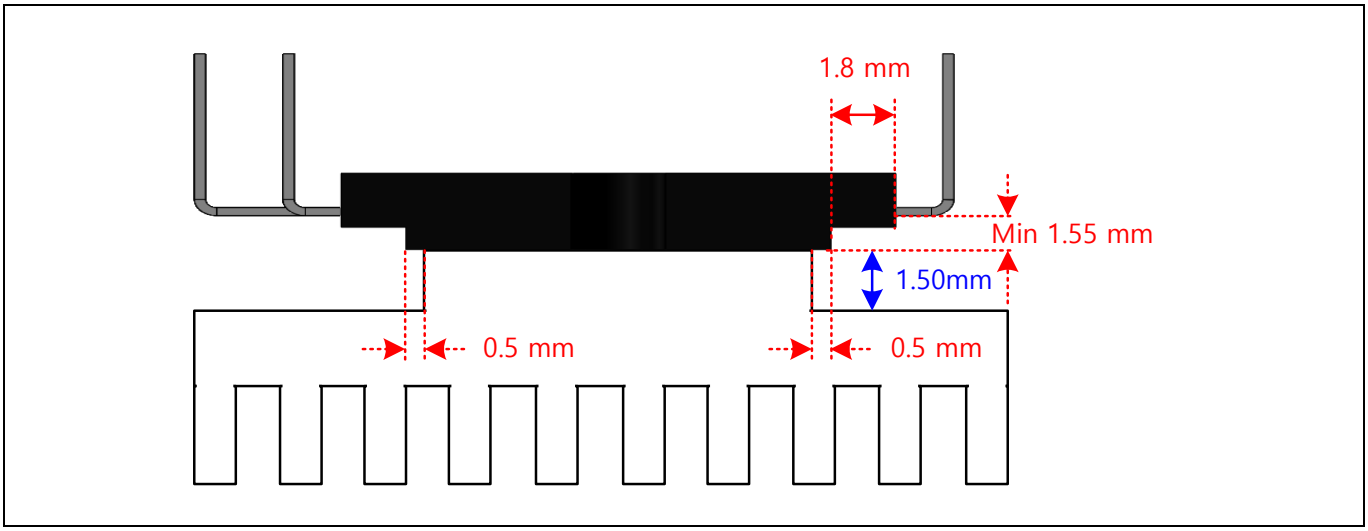

Figure 5 Stepped heat sink used to increase clearance and creepage

3.3 Electrical characteristics

Table 4 and Table 5 show the static and dynamic characteristics of the IM323-L6G.

Table 4 Static characteristics of the IM323-L6G (at V_{DD} = V_{BS} = 15 V)

Description	Symbol	Condition		Value			Unit
				Min.	Typ.	Max.	
Collector-emitter saturation voltage	$V_{CE(sat)}$	V_{IN} = 5 V, I_C = 12 A	T_J = 25°C	-	2.00	2.40	V
			T_J = 150°C	-	2.35	-	
Collector-emitter leakage current	I_{CES}	V_{CE} = 600 V				1	mA
Diode forward voltage	V_F	V_{IN} = 0 V, I_F = 12 A	T_J = 25°C	-	1.95	2.30	V
			T_J = 150°C	-	2.00	-	

Table 5 Dynamic characteristics of the IM323-L6G (at V_{DD} = 15 V, T_J = 25°C)

Description	Symbol	Condition	Value			Unit
			Min.	Typ.	Max.	
Turn-on propagation delay time	t_{on}	$V_{LIN, HIN}$ = 5 V, I_C = 15 A, V_{DC} = 300 V	-	720	-	ns
Turn-on rise time	t_r		-	40	-	ns
Turn-on switching time	$t_{c(on)}$		-	130	-	ns
Reverse recovery time	t_{rr}		-	135	-	ns
Turn-off propagation delay time	t_{off}	$V_{LIN, HIN}$ = 5 V, I_C = 15 A, V_{DC} = 300 V	-	805	-	ns
Turn-off fall time	t_f		-	25	-	ns
Turn-off switching time	$t_{c(off)}$		-	60	-	ns

The definition and evaluation method of the switching time are shown in Figure 6 (a) and (b). Switching characteristics are measured by a half-bridge circuit with inductive load. Figure 7 shows a typical switching waveform of the IM323-L6G at inductive load-switching test conditions as shown in Figure 6 (b).

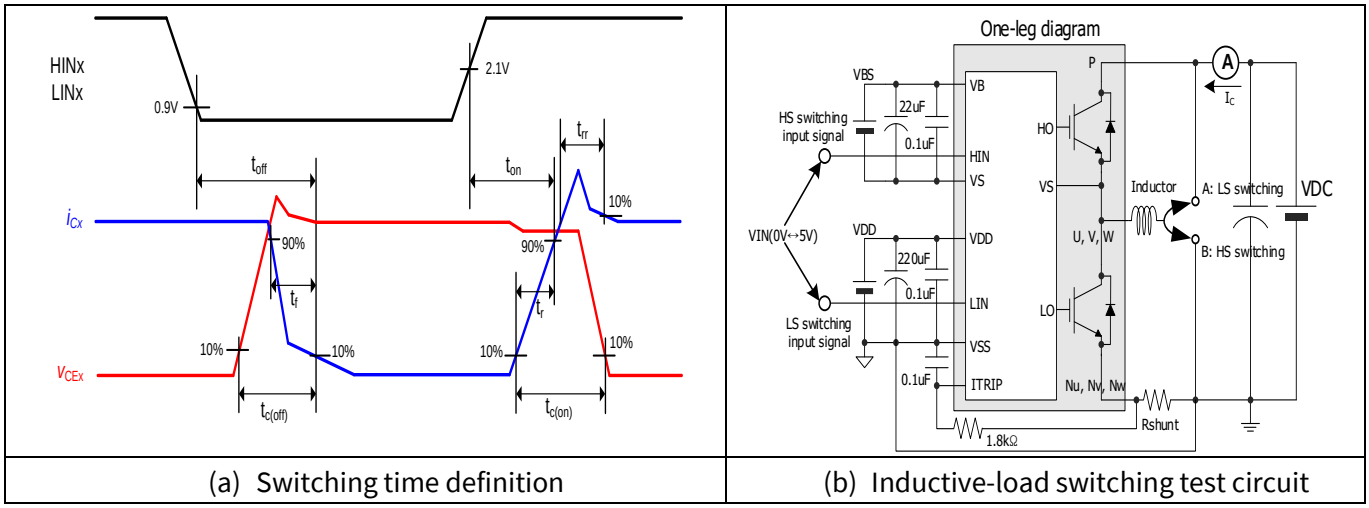

(a) Switching time definition | (b) Inductive-load switching test circuit

Figure 6 Switching time definition and evaluation circuit for a switching test

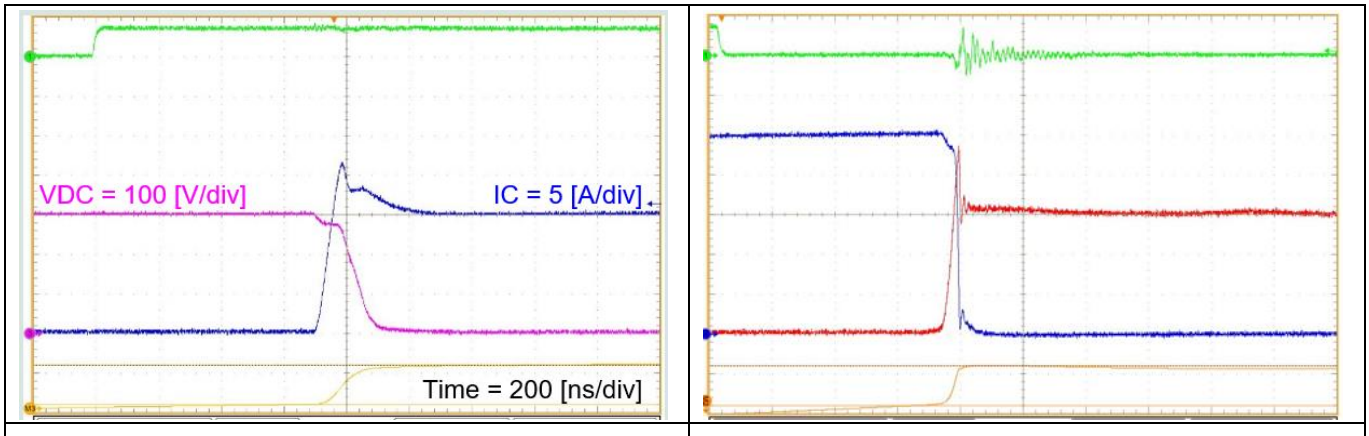

(a) Turn-on waveform | (b) Turn-off waveform

Figure 7 Typical switching waveform (V_{DC} = 300 V, V_{DD} = 15 V, I_C = 15 A, T_J = 150°C, inductive load) of the IM323-L6G

3.4 Input and output pins

Figure 8 shows the pin configuration of the IM323 and Table 6 provides the description of the input and output pins.

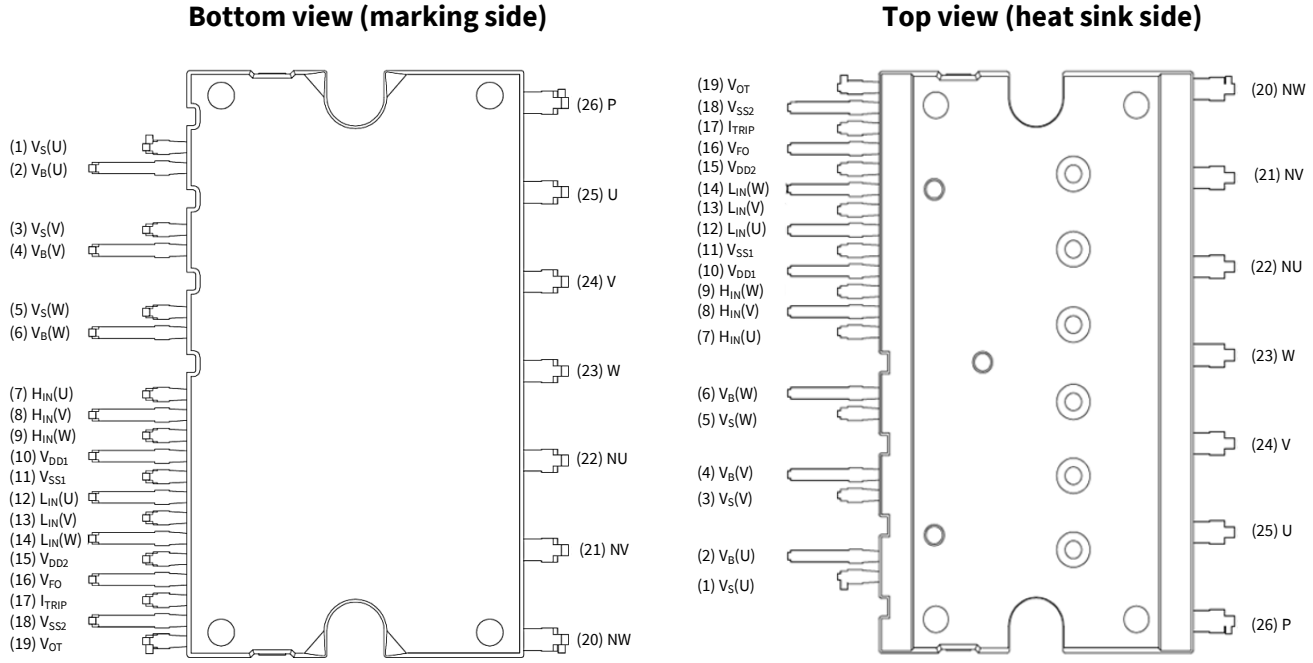

Figure 8 Pin configuration

Table 6 Pin descriptions of the IM323

Pin number	Pin name	Pin description
1	V_S(U)	U-phase, high-side floating IC supply offset voltage
2	V_B(U)	U-phase, high-side floating IC supply voltage
3	V_S(V)	V-phase, high-side floating IC supply offset voltage
4	V_B(V)	V-phase, high-side floating IC supply voltage
5	V_S(W)	W-phase, high-side floating IC supply offset voltage
6	V_B(W)	W-phase, high-side floating IC supply voltage
7	H_{IN}(U)	U-phase, high-side gate driver input
8	H_{IN}(V)	V-phase, high-side gate driver input
9	H_{IN}(W)	W-phase, high-side gate driver input
10	V_{DD1}	Low-side control supply
11	V_{SS1}	Low-side logic ground
12	L_{IN}(U)	U-phase, low-side gate driver input
13	L_{IN}(V)	V-phase, low-side gate driver input
14	L_{IN}(W)	W-phase, low-side gate driver input
15	V_{DD2}	Low-side control supply
16	V_{FO}	Fault output

17	I_{TRIP}	Overcurrent shutdown input
18	V_{SS2}	Low-side logic ground
19	V_{OT}	NTC thermistor terminal
20	NW	W-phase, low-side emitter
21	NV	V-phase, low-side emitter
22	NU	U-phase, low-side emitter
23	W	Motor W-phase output
24	V	Motor V-phase output
25	U	Motor U-phase output
26	P	Positive bus input voltage

The detailed functional description of the pins is as follows:

High-side bias voltage pins for driving the IGBT

Pins: V_B (U, V, W) – V_S (U, V, W)

- These pins provide power from the gate drive to the high-side IGBTs
- The ability to utilize a bootstrap circuit scheme for the high-side IGBTs eliminates the need for external power supplies
- Each bootstrap capacitor is charged from the V_{DD} supply during the ON-state of the corresponding low-side IGBT or the freewheeling state of the low-side freewheeling diode
- To prevent malfunctions caused by noise and ripple in the supply voltage, a good-quality low equivalent series resistance (ESR), low equivalent series inductance (ESL)to the inverter load

Low-side bias voltage pins

Pin: $V_{DD1, 2}$

- These are the control supply pins for the internal IC
- To prevent malfunctions caused by noise and ripples in the supply voltage, a good-quality (low ESR, low ESL) filter capacitor should be mounted very close to this pin

Low-side, common supply ground pin

Pin: $V_{SS1, 2}$

- This pin connects the control ground for the internal IC

Signal input pins

Pins: H_{IN} (U, V, W), L_{IN} (U, V, W)

- These pins control the operations of the internal IGBTs
- These pins are activated by voltage input signals. The terminals are connected internally to a Schmitt trigger circuit made of 3.3 V / 5 V-class CMOS
- The signal logic of these pins is active-high. The IGBT associated with each of these pins turns "ON" when a sufficient logic voltage is applied to these pins
- To protect the IM323 against noise influences, the wiring of each input should be as short as possible
- To prevent signal oscillations, an RC coupling (as shown in Figure 12) is recommended

Overcurrent detection pin

Pin: I_{TRIP}

- To detect short circuit current, the current-sensing shunt resistor should be connected between the N pin (emitter of the low-side IGBT) and the power ground (see Figure 18)
- To eliminate noise, an RC filter should be connected between the shunt resistor and the I_{TRIP} pin
- The integrated comparator is triggered if the voltage V_{ITRIP} is higher than 0.5 V. The shunt resistor should meet this level for the specific application
- The connection length between the shunt resistor and I_{TRIP} pin should be minimized

Fault-output alarm pin

Pin: V_{FO}

- In the CIPOS™ Tiny, an active low output is given on this pin for the fault-state condition. The alarm conditions are overcurrent detection or a low-side bias undervoltage (UV) operation
- The V_{FO} output has an open drain configuration. The V_{FO} signal line should be pulled up to the logic power supply (5V / 3.3V) with proper resistance

NTC thermistor terminal pin

Pin: V_{OT}

- This pin provides direct access to the NTC thermistor — V_{SS2}
- An external pull-up resistor connected to V_{DD} voltage ensures that the resulting voltage can be directly connected to the microcontroller

DC-link, positive power supply pin

Pin: P

- This pin is internally connected to the collectors of the high-side IGBTs
- To suppress the surge voltage caused by the DC-link wiring or the PCB pattern inductance, connect a smoothing filter capacitor (typically a metal film capacitors) close to this pin

DC-link, negative power supply pins

Pins: NU, NV, NW

- These are power ground supply pins of the inverter
- They are connected to the low-side IGBT emitters of each phase

Inverter power output pins

Pins: U, V, W

These pins are used for connecting (e. g., a motor) to the inverter load

3.5 Outline drawing

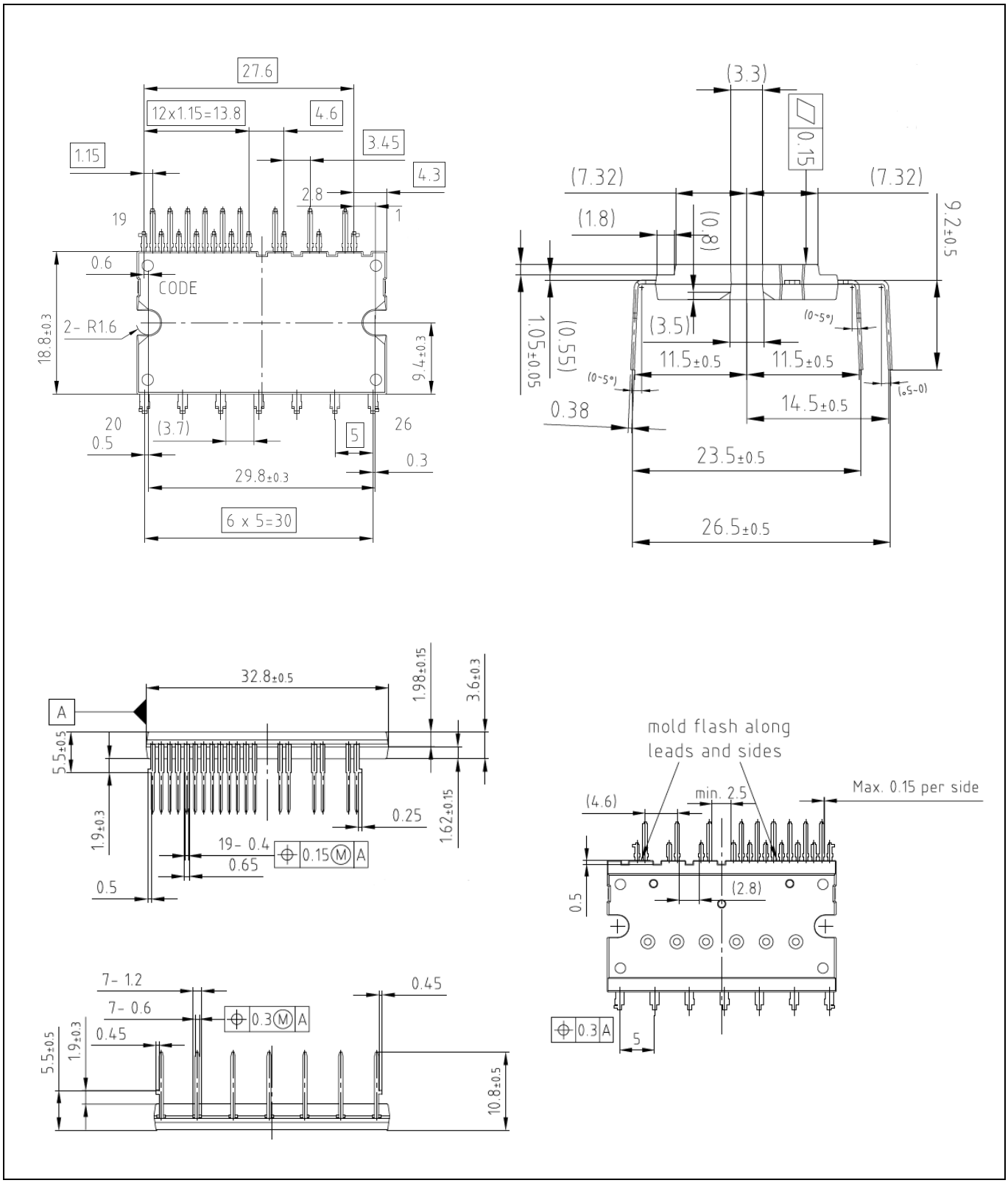

Figure 9 Package outline dimensions for standard terminal length (Unit: millimeters [mm])

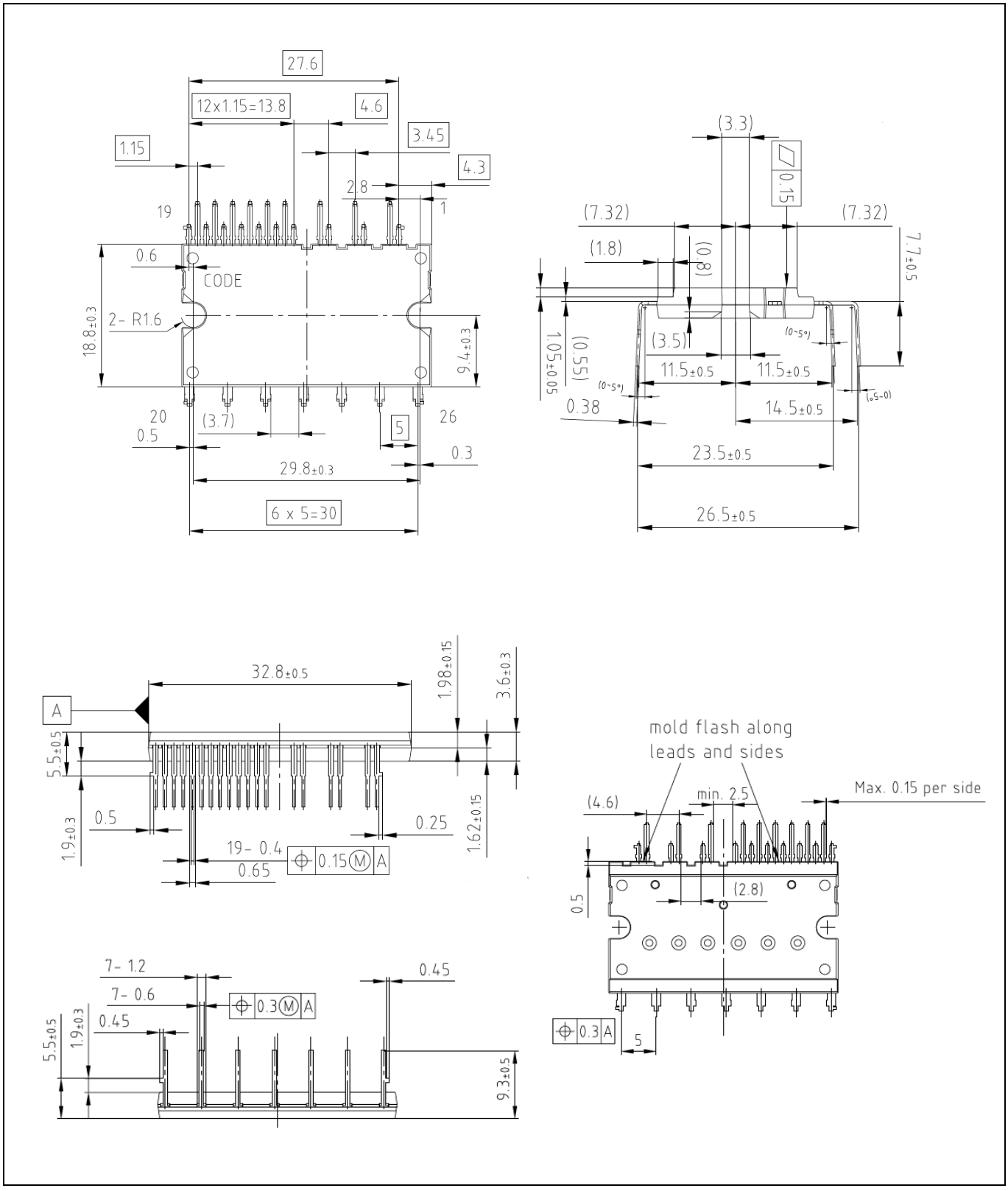

Figure 10 Package outline dimensions for short terminal length (Unit: millimeters [mm])

3.6 Marking

Figure 11 shows the laser marking specifications for the IM323. Company logo, device type, lot number, date code, and matrix code (2D) are marked on the upper side of the module.

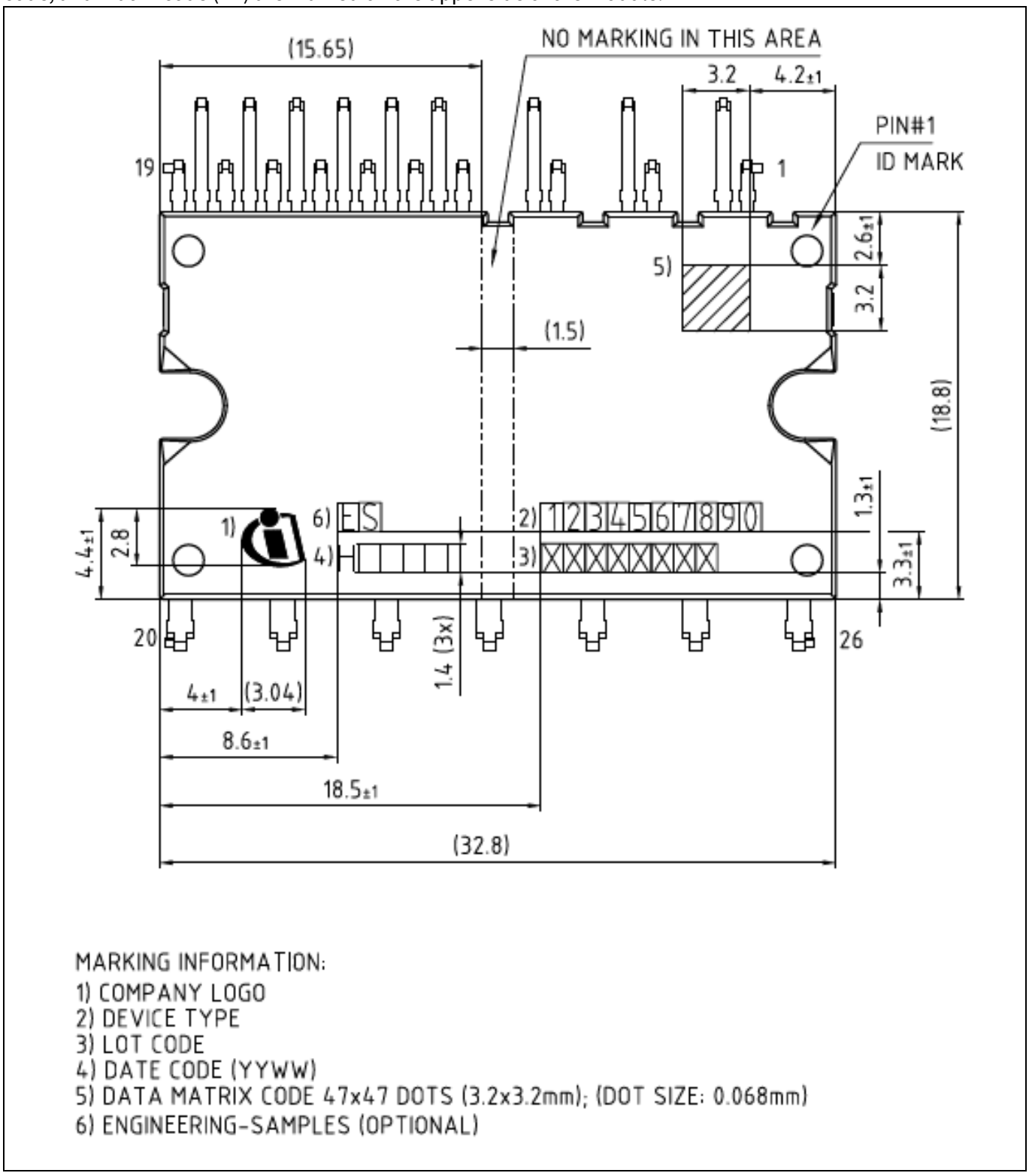

Figure 11 Marking information

4 Interface circuit and layout guide

4.1 Input signal connection

Figure 12 shows the I/O interface circuit between the microcontroller and the IPM. The IPM input logic is active-high with internal pull-down resistors. External pull-down resistors are not needed.

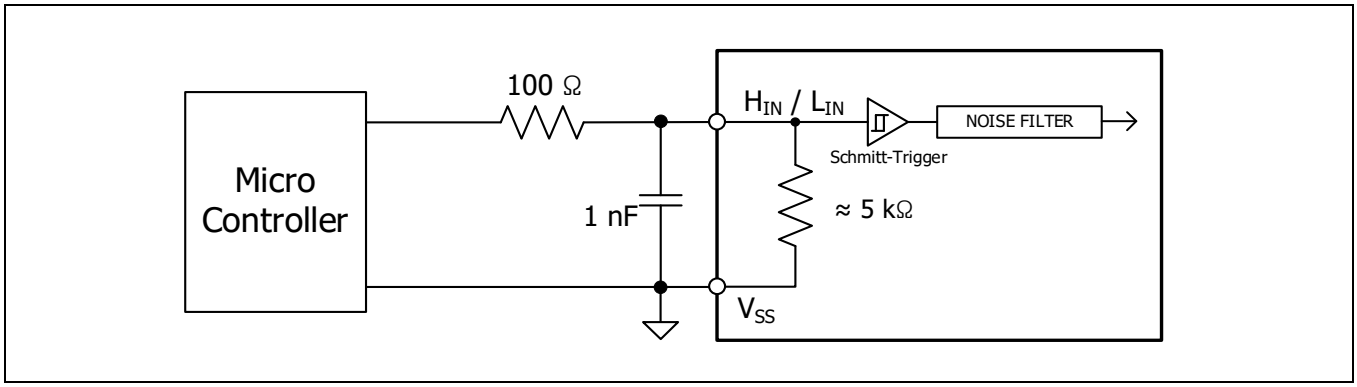

Figure 12 Recommended microcontroller I/O interface circuit

Table 7 Maximum ratings of inputs

Item	Symbol	Condition	Value	Unit
Module supply voltage	V_{DDX}	Applied between V_{DDX} – V_{SSX}	-1 ~ 20	V
High- side floating supply voltage	V_{BS}	Applied between V_B (U, V, W) – V_S (U, V, W)	-1 ~ 20	V
Input voltage	V_{IN}	Applied between H_{IN} (U, V, W) – V_{SS}, L_{IN} (U, V, W) – V_{SS}	-1 ~ V_{DD} +0.3	V

The maximum rated input voltages are listed in Table 7. Since the input voltage rating is V_{DD} +0.3 V, a 15 V supply interface is possible. However, it is recommended that the input signal be configured with a 5 V or 3.3 V logic supply to establish a direct connection with the microcontroller. It is also recommended that bypass capacitors be placed as close as possible to the signal lines from the microcontroller and the IPM.

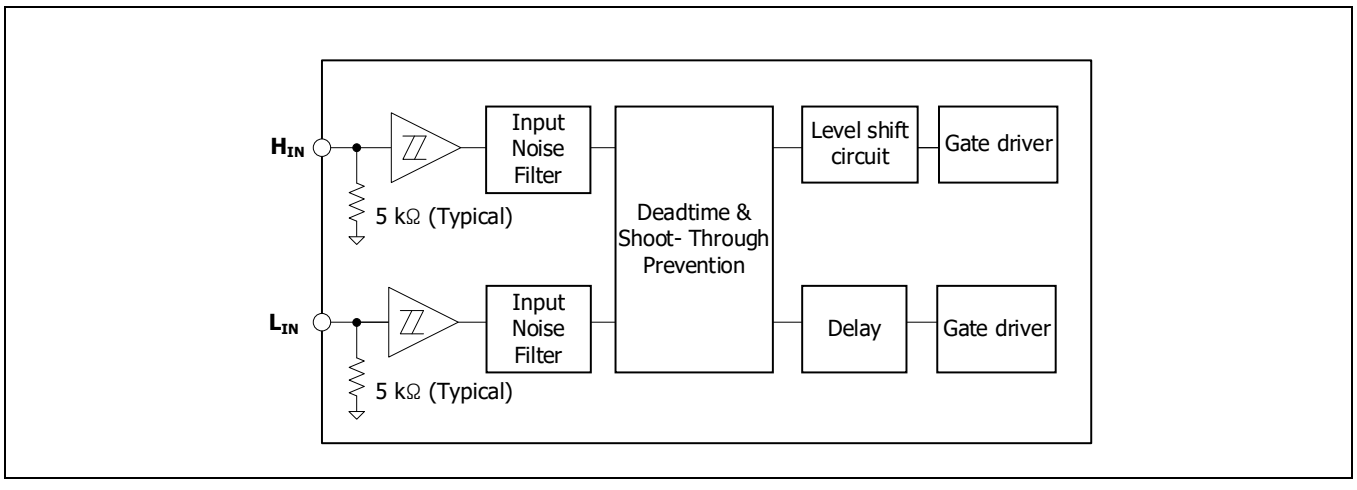

Figure 13 Simplified block diagram of the IM323 gate driver IC

As IM323 products use the active-high input logic, power sequence restriction between the control supply and the input signal during startup or shutdown does not exist. This makes the system fail-safe.

Since pull-down resistors are built into each input circuit, external pull-down resistors are not needed. This reduces the number of external components required. Input Schmitt trigger, noise filter, dead time, and shoot-through prevention functions provide beneficial noise rejection during short input pulses. Furthermore, IM323 inputs are compatible with standard CMOS and TTL outputs. The gate driver IC of the IM323 is compatible with 3.3 V and 5 V logic level signals. Therefore, by lowering the turn-on and turn-off threshold voltage of input signals as shown in Table 8, a direct connection to the 3.3 V / 5 V class microcontroller or DSP is possible.

Table 8 Input threshold voltage (at V_{DD} = V_{BS} = 15 V, T_J = 25°C)

Item	Symbol	Condition	Min.	Typ.	Max.	Unit
Logic "1" input voltage (L_{IN}, H_{IN})	V_{IH}	H_{IN} – V_{SS}	1.7	2.0	2.3	V
Logic "0" input voltage (L_{IN}, H_{IN})	V_{IL}	L_{IN} – V_{SS}	0.7	0.9	1.1	V

As shown in Figure 13, the IM323 input signal section integrates a 5 kΩ (typical) pull-down resistor. Therefore, when using an external filtering resistor between the microcontroller output and the IPM input, pay attention to the signal voltage drop at the IPM input terminals. It should fulfill the logic "1" input voltage requirement. For e.g., R = 100 Ω and C = 1 µF for the parts shown in Figure 12.

4.2 Internal dead time

The gate driver IC of the IM323 includes an integrated dead time protection circuitry. The dead time for the gate driver IC is fixed. This dead time feature inserts a time period (a minimum dead time) in which both the high- and low-side power switches are held off; this is done to ensure that the power switch being turned off has switched off completely before the second power switch is turned on.
The minimum dead time is automatically inserted whenever the external dead time is shorter than DT_{IC}, external dead times larger than DT_{IC} are not modified by the gate driver IC.

Table 9 Internal dead time (at V_{DD} = 15 V, T_J = 25°C)

Item	Symbol	Condition	Min.	Typ.	Max.	Unit
Internal dead time	DT_{IC}	V_{IN} = 0 V or V_{IN} = 3.3 V	220	360	580	ns

4.3 Cross-conduction prevention circuitry

The gate driver IC of the IM323 is equipped with a shoot-through protection circuitry (also known as cross-conduction prevention circuitry or interlock circuitry). Figure 14 shows how this protection circuitry prevents both the high and low-side switches from conducting at the same time.

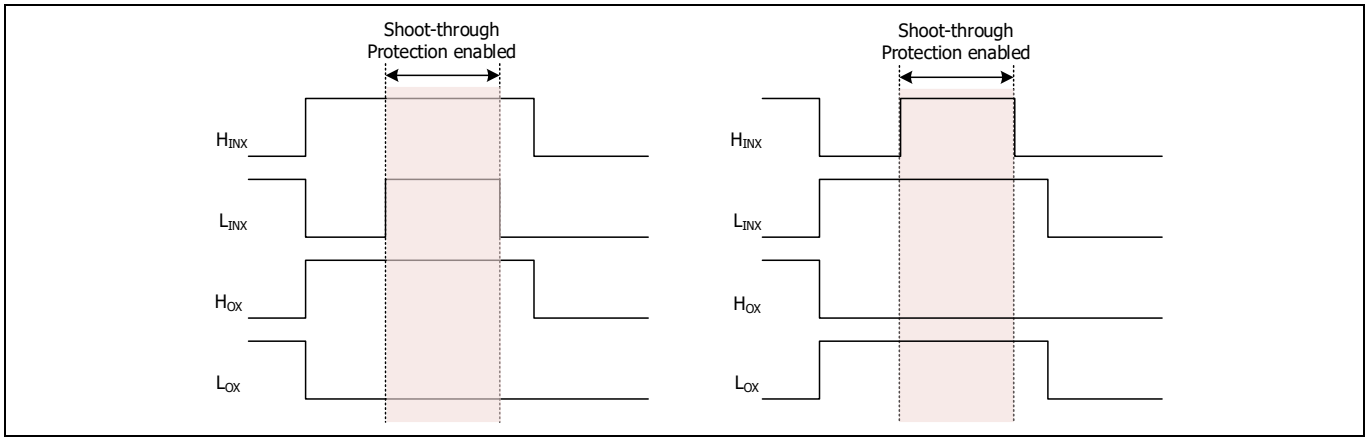

Figure 14 Illustration of a shoot-through protection circuitry

4.4 Advanced input filter

The advanced input filter improves the input/output pulse symmetry of the gate driver IC and rejects noise spikes and short pulses. It has been applied to the H_{IN} and L_{IN} inputs. The working principle of this new filter is shown in Figure 15 (a) and (b).

Figure 15 (a) shows a typical input filter and the asymmetry between the input and the output. The upper pair of waveforms (Example 1) show an input signal width of a duration much longer than $t_{FIL,IN}$ and the lower pair of waveforms (Example 2) show an input signal width of a duration only slightly longer than $t_{FIL,IN}$. The resulting output in both is approximately the difference between the input signal and $t_{FIL,IN}$.

Figure 15 (b) shows the advanced input filter of the IM323 and the symmetry between the input and the output. The upper pair of waveforms (Example 1) show an input signal width of a duration much longer than $t_{FIL,IN}$ and the lower pair of waveforms (Example 2) show an input signal width of a duration only slightly longer then $t_{FIL,IN}$. The resulting output in both is approximately the same as the input signal.

Table 10 Input filter time (at V_{DD} = 15 V, T_J = 25°C)

Item	Symbol	Condition	Min.	Typ.	Max.	Unit
Input filter time at L_{IN}, H_{IN} for turn-on and turn-off	$t_{FIL,IN}$	$V_{LIN, HIN}$ = 0 V or 3.3 V	140	290	550	ns

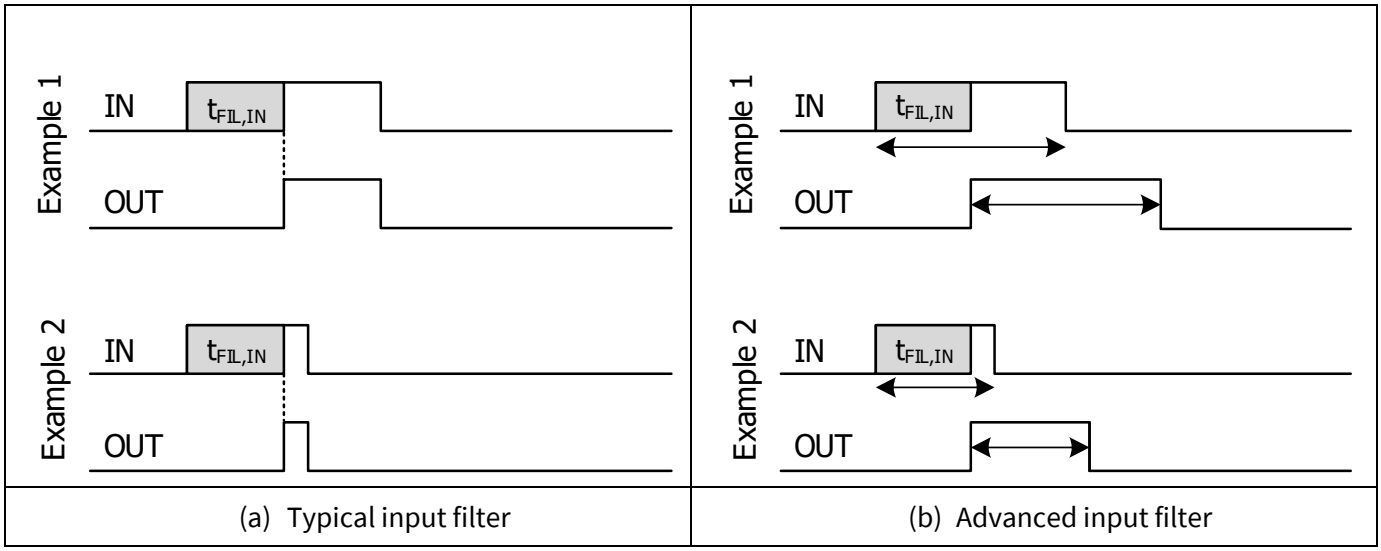

Figure 15 Characteristics of an internal input filter

4.5 Matched propagation delay

The gate driver IC of the IM323 is designed with a propagation delay matching circuitry. This feature ensures that the internal gate driver IC's response to the output and input signals requires approximately the same amount of time (i.e., t_{ON}, t_{OFF}) for both the low-side and high-side channels. The maximum difference is specified by the delay matching parameter (M_T). The propagation turn-on delay (t_{ON}) of the IM323 is matched to the propagation turn-off delay (t_{OFF}). Delay matching turn-on and turn-off between the high-side and the low-side means that there is a time difference between the L_O and H_O outputs. This occurs when each output has reached 10% of its maximum (during turn-on) or when each output has decreased to 90% of its maximum (during turn-off), assuming that H_{INX} and L_{INX} are simultaneously applied. The shorter the delay matching time, the better the circuit's performance.

Table 11 Matching propagation delay time (at V_{DD} = V_{BS} = 15 V, T_J = 25°C)

Item	Symbol	Condition	Min.	Typ.	Max.	Unit
Matching propagation delay time (on and off) for all channels	M_T	External dead time > 500 ns	-	20	80	ns

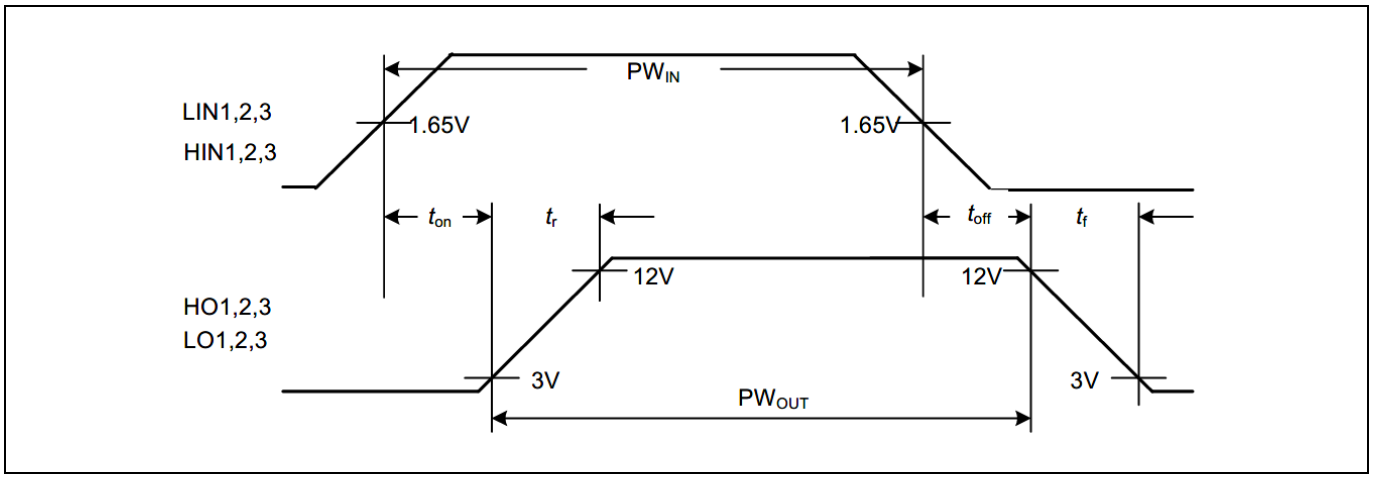

Figure 16 Delay matching waveform definition

4.6 General interface circuit example

Figure 17 shows a typical application circuit of the IM323 for an interface schematic with control signals connected directly to a microcontroller.

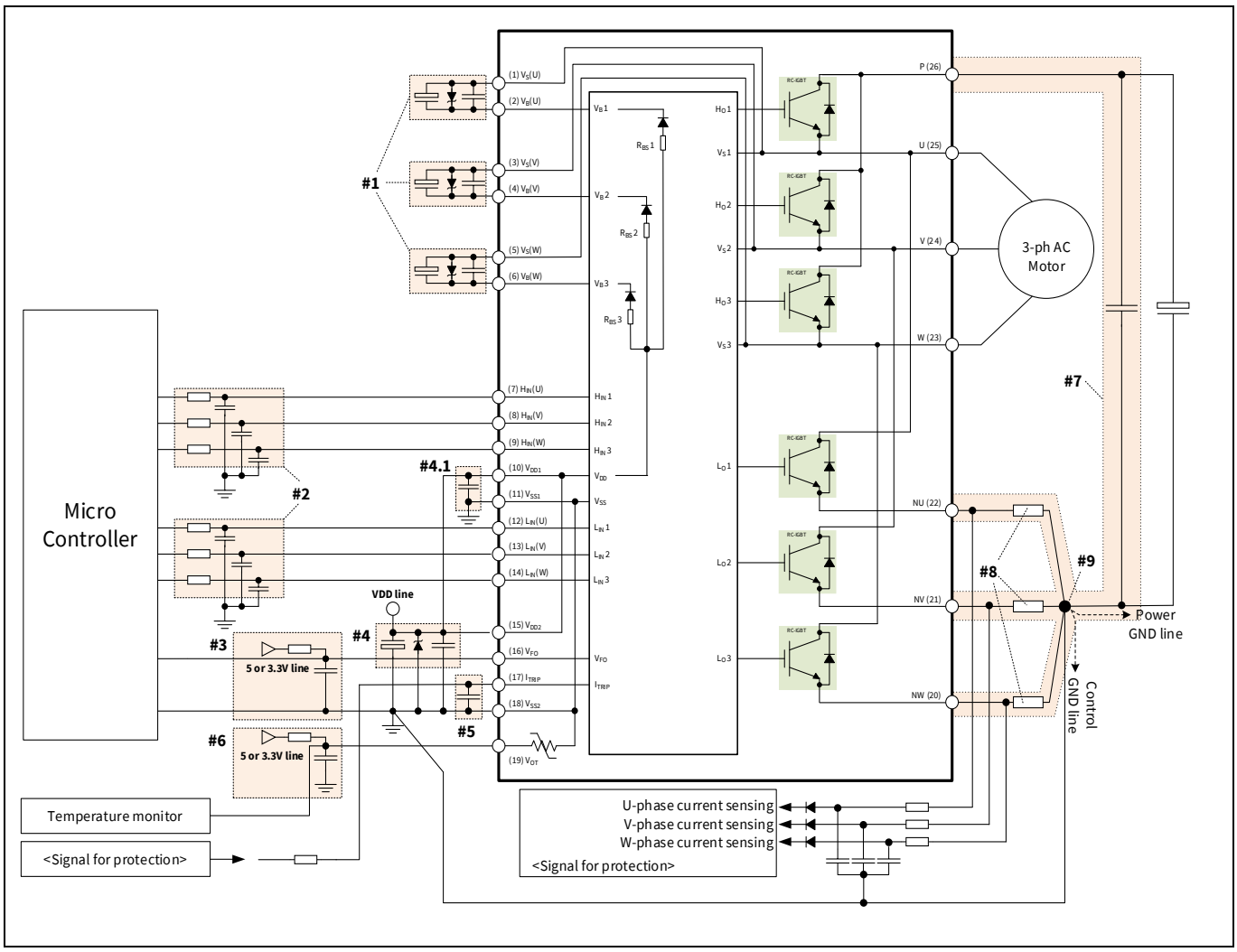

Figure 17 Example of an application circuit

Note:

1. V_B–V_S circuit
   - The capacitor for high-side floating supply voltage should be placed as close to the V_B and V_S pins as possible
   - For protection against external surge voltage, the TVS or Zener diode is very useful
2. Input circuit
   - To reduce input signal noise by high-speed switching, the R_{IN} and C_{IN} filter circuit should be mounted between the microcontroller and the IPM (100 Ω, 1 nF)
   - C_{IN} should be placed as close to the V_{SS} pin as possible
3. V_{FO} circuit
   - The V_{FO} output is an open-drain output. This signal line should be pulled up to the positive side of the 5 V / 3.3 V logic power supply with a proper resistor, R_{PU}. It is recommended that the RC filter that is placed between the CIPOS™ Tiny and the microcontroller, be placed closer to the microcontroller

4. V_{DD} and V_{SS}
   - Capacitor and Zener diode that control supply voltage should be placed as close to the V_{DD2} and V_{SS2} pins as possible
5. I_{TRIP} circuit
   - To prevent protection-function errors, C_{ITRIP} should be placed as close to the I_{TRIP} and V_{SS2} pins as possible
6. V_{OT} circuit
   - The V_{OT} output is a NTC voltage. This signal line should be pulled up to the positive side of the 5 V / 3.3 V logic power supply with a proper resistor; R_{PU}. It is recommended that the RC filter be placed as close to the microcontroller as possible
7. Snubber capacitor
   - The wiring between the IM323 and the snubber capacitor (including shunt resistor) should be as short as possible
8. Shunt resistor
   - A shunt resistor of the surface mount devices (SMD) type should be used to reduce stray inductance
9. Ground pattern
   - The ground pattern (control and power ground) should be separated at only one point

4.7 Recommended rated output current of the power supply

Control and gate drive power for the IM323 is normally provided by a single 15 V supply that is connected to the V_{DDX} module and the V_{SSX} terminal. The circuit current of the V_{DD} control supply for the IM323-L6G is shown in Table 12.

Table 12 The circuit current of the control power supply of IM323-L6G (Unit: [mA])

Item		Static (typ.)	Dynamic (typ.)	Total (typ.)
V_{DD} = 15 V	F_{SW} = 5 kHz	1.17	0.94	2.11
	F_{SW} = 15 kHz	1.17	2.83	4.00
V_{DD} = 20 V	F_{SW} = 20 kHz	1.61	4.82	6.43

The circuit current of the 5 V logic power supply (V_{FO} and input terminals) is about 5 mA.

Finally, the recommended minimum circuit currents of the power supply are shown in Table 13. It takes into consideration the ripple current and sufficient margins for the worst conditions, for e.g. 5 times higher value than the calculated one.

Table 13 The recommended minimum circuit current of the power supply (Unit: [mA])

Item	The circuit current of +15 V control supply	The circuit current of +5 V logic supply
$V_{DD} \leq 20$ V, $F_{SW} \leq 20$ kHz	32.0	22.0

4.8 Recommended layout pattern for the overcurrent protection (OCP) and short-circuit protection (SCP) functions

It is recommended that the I_{TRIP} filter-capacitor connection to the IM323 pins be as short as possible. The I_{TRIP} filter-capacitor should be connected to the V_{SS2} pin directly without any overlapping ground pattern. The signal-ground and power-ground should be as short as possible and connected at only one point through the capacitor of the V_{DD} line.

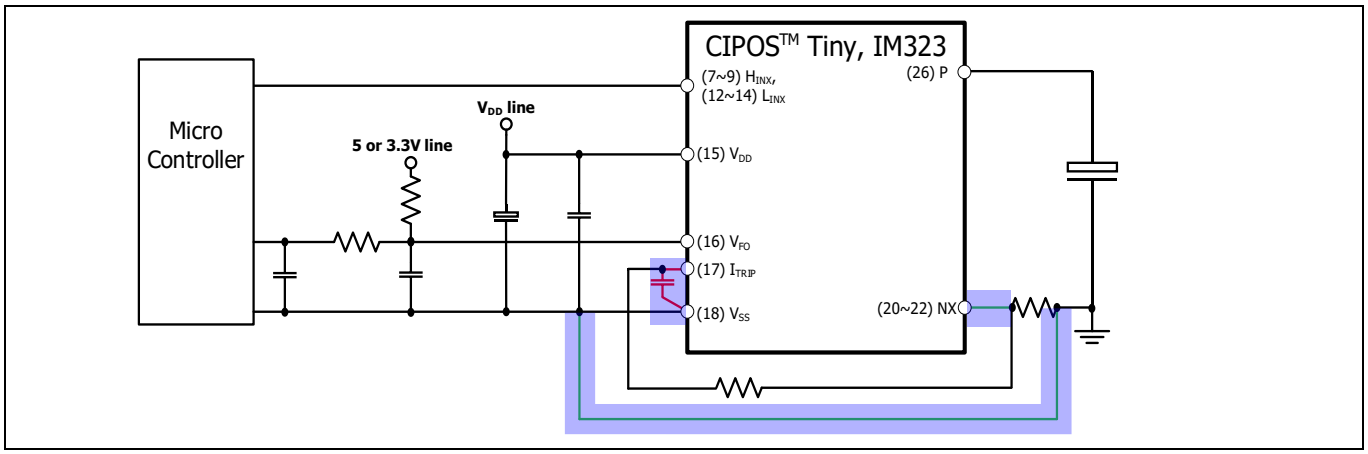

Figure 18 Recommended layout pattern for the OCP and SCP functions

4.9 Recommended wiring of the shunt resistor and snubber capacitor

External current sensing resistors are applied to detect overcurrent of the phase currents. A long wiring pattern between the shunt resistors and the IM323 will cause excessive surges that might damage the IM323's internal IC and current detection components. It may also distort the sensing signals. To decrease the pattern inductance, wiring between the shunt resistors and the IM323 should be as short as possible. As shown in Figure 19, snubber capacitors should be installed in the right location to suppress surge voltages effectively. Generally, a high frequency, non-inductive capacitor of around 0.1 to 0.22 µF is recommended. As shown in Figure 19, if the snubber capacitor is installed in the wrong location '1', the snubber capacitor will not be able to suppress the surge voltage effectively. If the capacitor is installed in location '2', the charging and discharging currents generated by the wiring inductance and the snubber capacitor will appear on the shunt resistor. This will impact the current-sensing signal and the short-circuit protection level will be a little lower than the calculated design value. The surge suppression effect at location '2' is greater than that at location '1' or '3'. Location '3' is a reasonable compromise with better suppression effect than in location '1' and without impacting the accuracy of the current-sensing signal. For this reason, snubber capacitors are generally installed in location '3'.

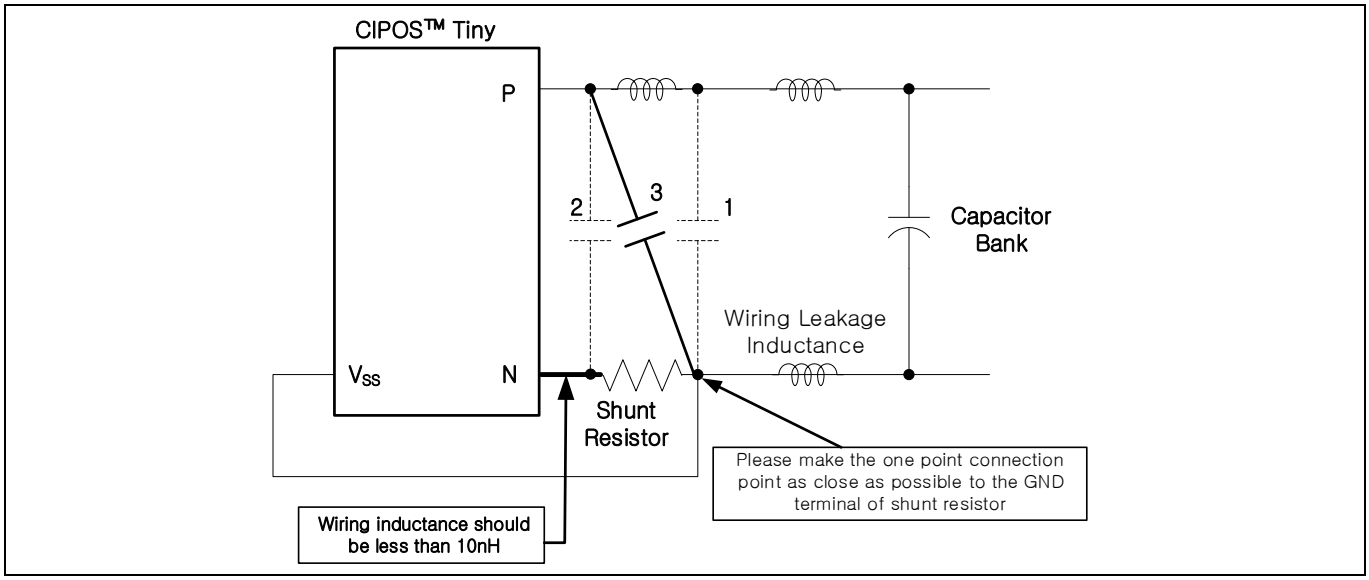

Figure 19 Recommended wiring of the shunt resistor and snubber capacitor

4.10 Pin and screw-hole coordinates for the IM323 footprint

Figure 20 shows IM323's position on a PCB with the center coordinates of each pin and screw-hole listed in Table 14. These pin and screw-hole positions are only for illustration.

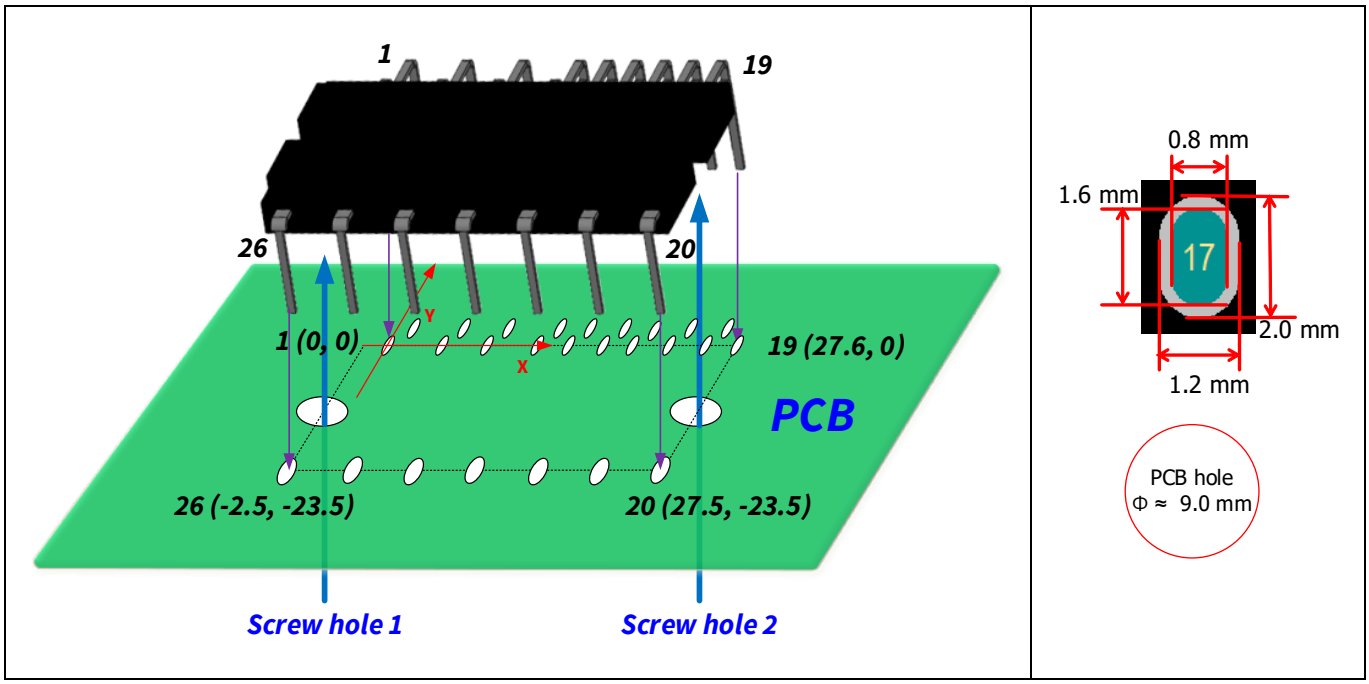

Figure 20 IM323's position on a PCB (Unit: [mm]) and example of a pad design (1 to 26pin)

Table 14 Pin and screw-hole coordinates for the IM323 footprint (Unit: [mm])

Pin number		X	Y	Pin number		X	Y
Signal pin	1	0.00	0.00	Signal pin	15	23.00	0.00
	2	1.15	3.00		16	24.15	3.00
	3	4.60	0.00		17	25.30	0.00
	4	5.75	3.00		18	26.45	3.00
	5	9.20	0.00		19	27.60	0.00
	6	10.35	3.00	Power pin	20	27.50	-23.50
	7	13.80	0.00		21	22.50	-23.50
	8	14.95	3.00		22	17.50	-23.50
	9	16.10	0.00		23	12.50	-23.50
	10	17.25	3.00		24	7.50	-23.50
	11	18.40	0.00		25	2.50	-23.50
	12	19.55	3.00		26	-2.50	-23.50
	13	20.70	0.00	Screw hole	1	-2.95	-11.75
	14	21.85	3.00		2	27.15	-11.75

5 Protection features

5.1 Undervoltage protection

Control and gate drive power for the IM323 are normally provided by a single 15 V supply that is connected to the V_{DD} and V_{SS} terminals of the module. For proper operation, this voltage should be regulated to 15 V ± 10%. Table 15 describes the behavior of the IM323 for various control supply voltages. The control supply should be well filtered using a low-impedance electrolytic capacitor and a high-frequency decoupling capacitor connected at IM323's pins.

High-frequency noise on the supply might cause the internal control IC to malfunction and generate erroneous fault signals. To avoid these problems, the maximum ripple on the supply should be less than ± 1 V/µs.

The potential at the module's V_{SS} terminal differs from that at the N-power terminal by the voltage drop across the sense resistor. It is very important that all control circuits and power supplies be referred to the V_{SS} terminal and not to the N terminal. If circuits are improperly connected, the additional current flowing through the sense resistor might cause improper operation of the short-circuit protection function. In general, making the common reference (V_{SS2}) a ground plane in the PCB layout is a good practice.

The main control power supply is connected to the bootstrap circuits to generate floating supplies for the high-side gate drives.

When control supply voltages (V_{DD} and V_{BS}) fall below the undervoltage lockout (UVLO) level, the IGBTs turn off ignoring the input signal.

Table 15 IM323 functions versus control power supply voltage

Control voltage range [V]	Function operations
0 to 12.4	As the UVLO function is activated the control input signals are blocked and a fault signal V_{FO} is generated
12.4 to 13	The IGBTs will operate according to the control gate input. As the driving voltage is below the recommended range, the $V_{CE\,(Sat)}$ and the switching losses are larger than under normal conditions. Operation in this range is not recommended
13 to 17.5	Normal operation. This is the recommended operating condition. V_{DD} of 14.5 V to 17 V is recommended when only the integrated bootstrap circuitry is used
17.5 to 20	IGBTs still operate. As the driving voltage is above the recommended range, the IGBTs' switching is faster. This increases system noise and the peak short-circuit current might be too large for the short-circuit protection to work properly. Operation in this V_{DD} range is not recommended
Over 20	Control circuit in the IM323 might be damaged

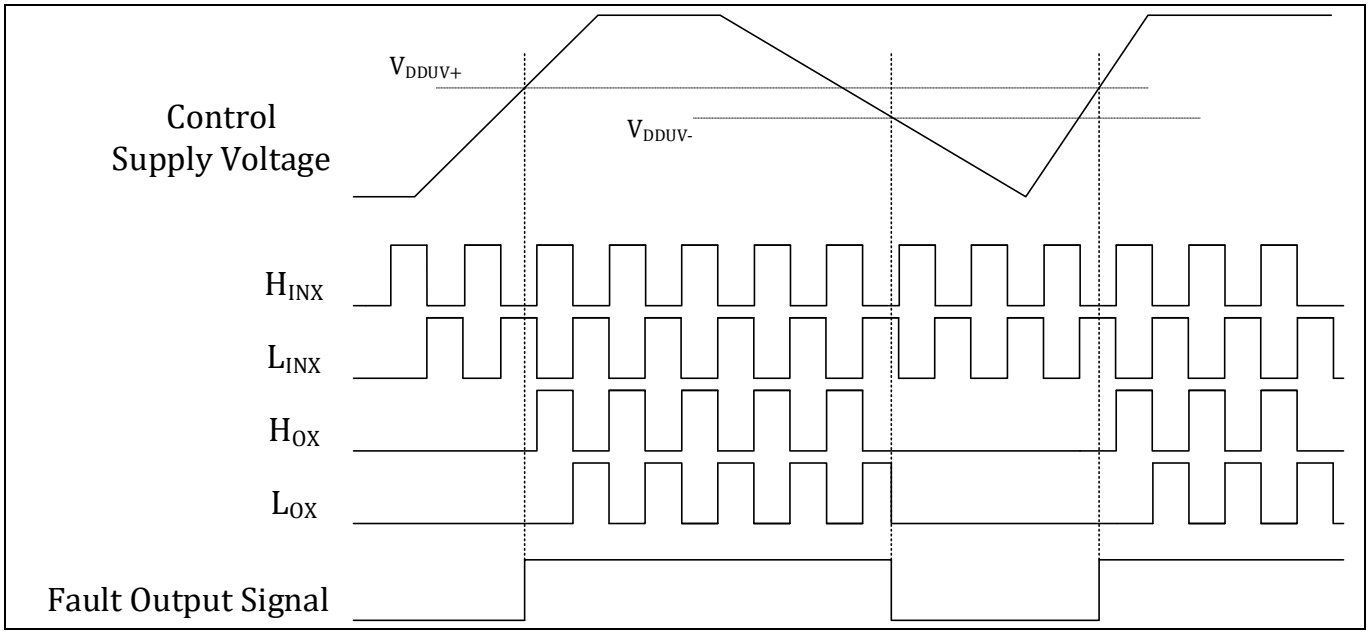

Figure 21 Timing chart of the low-side undervoltage protection function

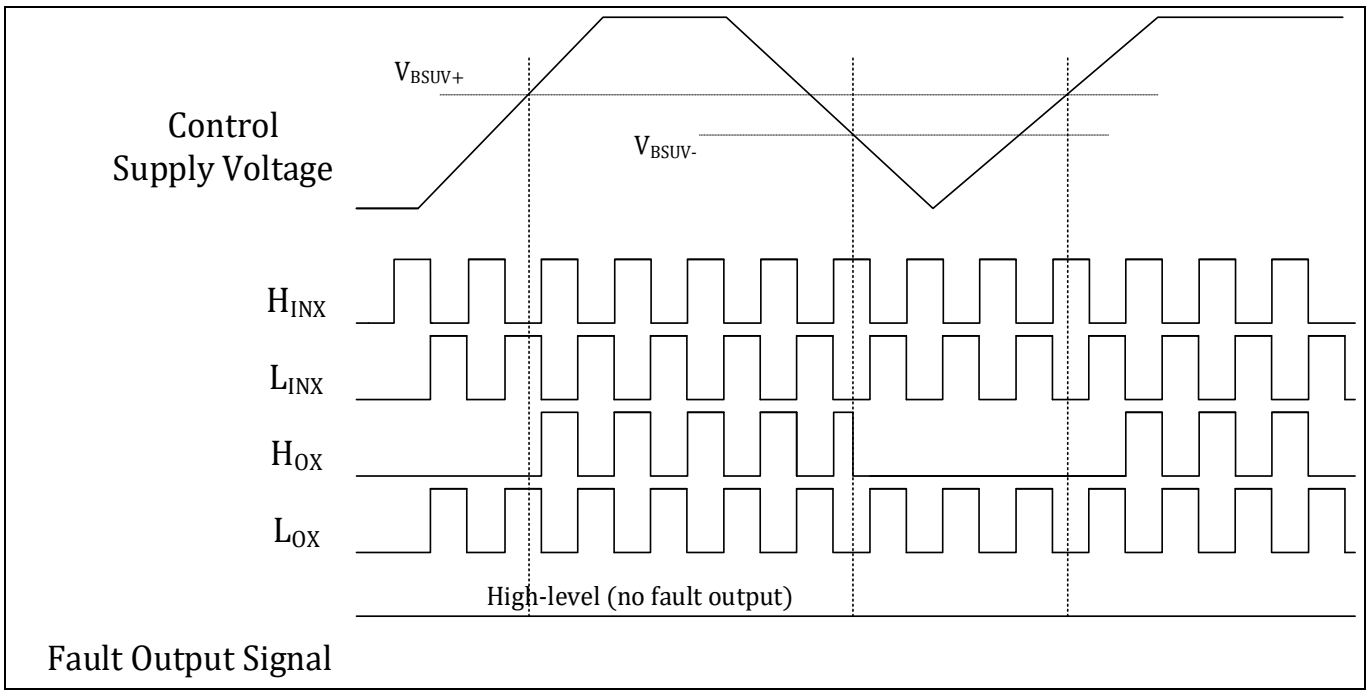

Figure 22 Timing chart of the high-side undervoltage protection function

5.2 Overcurrent protection

5.2.1 Timing chart of overcurrent (OC) protection

The IM323 has an overcurrent shutdown function. Its internal IC monitors the voltage at the I_{TRIP} pin. If this voltage exceeds the $V_{IT,TH+}$ specified in the device's datasheets, a fault signal is activated and all IGBTs are turned off. Typically, the maximum magnitude of the short-circuit current is dependent on the gate voltage. A higher gate voltage results in a larger short-circuit current. To avoid potential problems, the maximum overcurrent-trip level is usually set to twice below the nominal rated collector current. Figure 23 shows the timing chart of the overcurrent protection function.

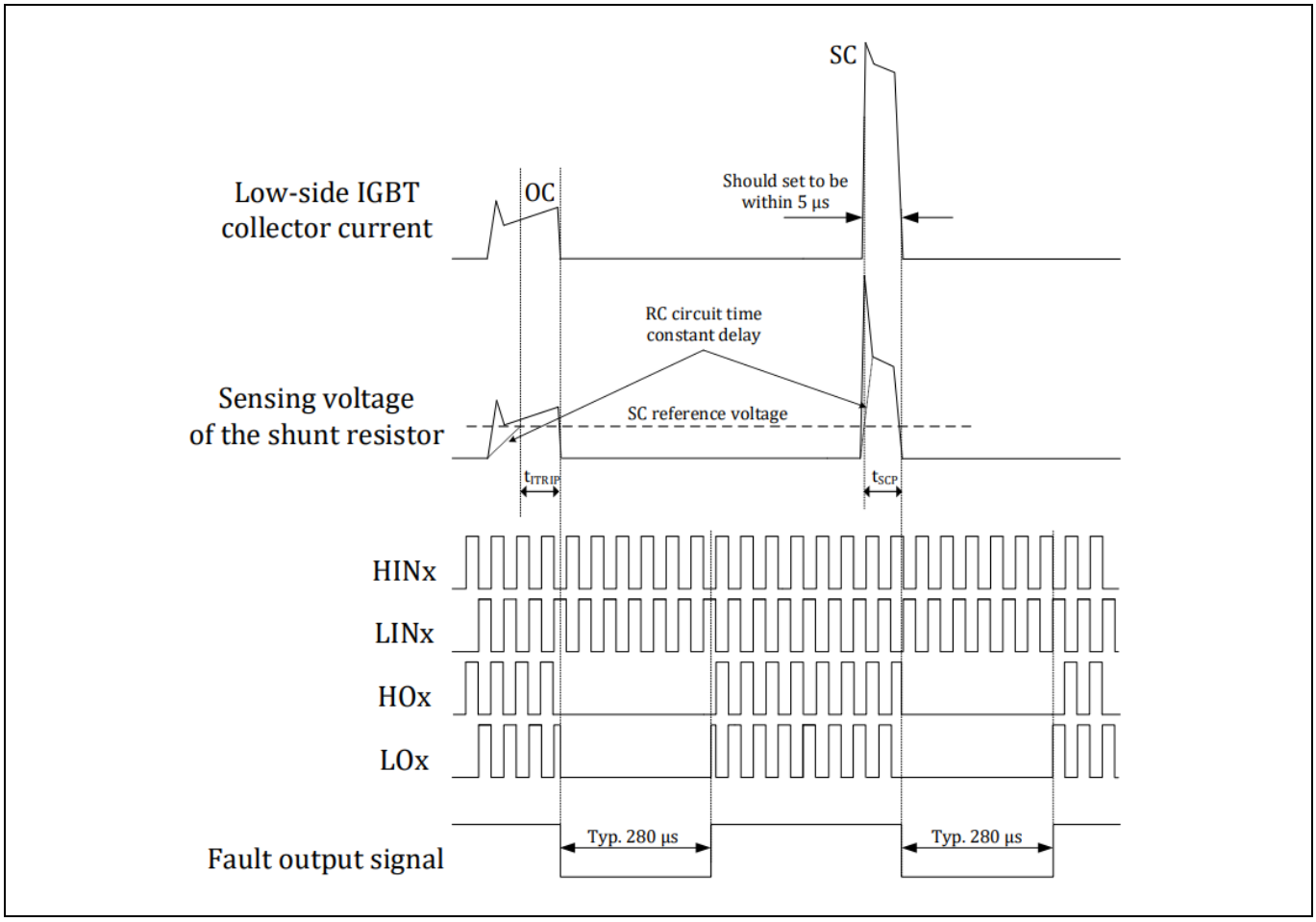

Figure 23 Timing chart of the overcurrent protection function

5.2.2 Selecting current-sensing shunt resistor

The value of the current-sensing resistor is calculated using the following equation:

$$R_{SH} = \frac{V_{IT,TH+}}{I_{OC}} \quad (1)$$

Here, $V_{IT,TH+}$ is the I_{TRIP} positive-going threshold voltage of the IM323 which is typically 0.525 V and I_{OC} is the overcurrent-protection level current

The maximum value of OC-protection level should be set lower than the repetitive peak-collector current mentioned in the datasheet taking into consideration the tolerance of the shunt resistor.

For example, the maximum peak-collector current of the IM323-L6G is 30 A_{peak}, thus, the recommended value of the shunt resistor is calculated as:

$$R_{SH(\min)} = \frac{0.525}{30} = 0.0175\ \Omega = 17.5\ \text{m}\Omega$$

For power rating the shunt resistor, the following should be considered:

- Maximum load current of the inverter (I_{rms})
- Shunt resistor value at T_C = 25°C (R_{SH})
- Power derating ratio of shunt resistor at T_{SH} = 100°C according to the manufacturer's datasheet
- Safety margin

The shunt resistor power rating is calculated using the following equation:

$$P_{SH} = \frac{I_{rms}^2 \times R_{SH} \times margin}{derating\ ratio} \quad (2)$$

For example, in the case of IM323-L6G with R_{SH} = 18 mΩ

- Max. load current of the inverter: 10.6 A_{rms}
- Power derating ratio of shunt resistor at T_{SH} = 100°C: 80%
- Safety margin: 30%

$$P_{SH} = \frac{10.6^2 \times 0.018 \times 1.3}{0.65} = 3.286\ W$$

An appropriate power rating of the shunt resistor exceeds 3.29 W (e.g., 3.5 W.) In addition, we recommend SMD type shunt resistors to minimize the surge voltage by stray inductance, please refer to the Table 16. Please refer to Table 16

Table 16 Specification of the shunt resistor

Model	Power rating	Max. rating current [A]	Max. overload current [A]	Operating temp. range [°C]
LR2728(RARA)	3.5 [W] at 70°C	29.58	51.23	-55 to170

5.2.3 Delay time

The filter is necessary in the overcurrent-sensing circuit to prevent any malfunction caused by noise, in the OC-protection. The RC time constant is determined by considering the noise duration and the short circuit withstand time capability of the IGBT.

When the sensing voltage on the shunt resistor exceeds the I_{TRIP} positive-going threshold ($V_{IT,TH+}$), this voltage is applied to the I_{TRIP} pin of the IPM through the RC filter. Overcurrent-protection reference level specifications are listed in Table 17. The filter delay time (t_{Filter}) until the input voltage of the I_{TRIP} pin rises to the I_{TRIP} positive threshold voltage level is defined by the following equations:

$$V_{IT,TH+} = R_{SH} \cdot I_C \cdot \left(1 - \frac{1}{e^{\frac{t_{Filter}}{\tau}}}\right) \quad (3)$$

$$t_{Filter} = -\tau \cdot \ln\left(1 - \frac{V_{IT,TH+}}{R_{SH} \cdot I_C}\right) \quad (4)$$

Here, $V_{IT,TH+}$ is the I_{TRIP} pin input voltage, I_C is the peak current, R_{SH} is the shunt resistor value, and τ is the RC time constant. In addition, there is a short-circuit propagation delay time of I_{TRIP} (t_{SCP}) that is defined by the propagation delay time from $V_{IT,TH+}$ to 10% of the I_{SC}. Please refer to Table 18.

Table 17 Specification of the OC-protection reference level, $V_{IT,TH+}$

Item	Symbol	Min.	Typ.	Max.	Unit
I_{TRIP} positive-going threshold	$V_{IT,TH+}$	0.475	0.525	0.570	V

Table 18 Shut-down propagation delay

Item		Condition	Min.	Typ.	Max.	Unit
Short-circuit propagation delay time (t_{SCP})	IM323 - L6G	From $V_{IT,TH+}$ to 10% I_{SC}	-	1250	-	ns
	IM323 – L6G2					

Therefore, the total time from the I_{TRIP} positive-going threshold ($V_{IT,TH+}$) to the shut-down of the IGBT is:

$$t_{total} = t_{Filter} + t_{SCP} \quad (5)$$

The short-circuit propagation delay can be changed based on operating conditions such as the operating temperature and the V_{DD}, V_{DC}. The total delay must be less than the withstand time (t_{SC}) given in the datasheet. Since the t_{SC} can vary with the control-supply voltage or the DC link voltage, it is recommended to set the RC time constant with a margin.

5.2.4 Short-circuit safety operation area (SCSOA) characteristics

Figure 24 shows the typical (not guaranteed) SCSOA performance graph of the IM323 products under short circuit status with the listed conditions. In the case of the IM323-L6G, the graph illustrates that if the short-circuit time is less than 5 µs, the IGBT can turn off safely. In this case, the IGBT can shut down a short-circuit current (non-repetitive) of about 120 A_{peak} (this current depends on the test conditions) under a control-supply voltage of 16.5 V.

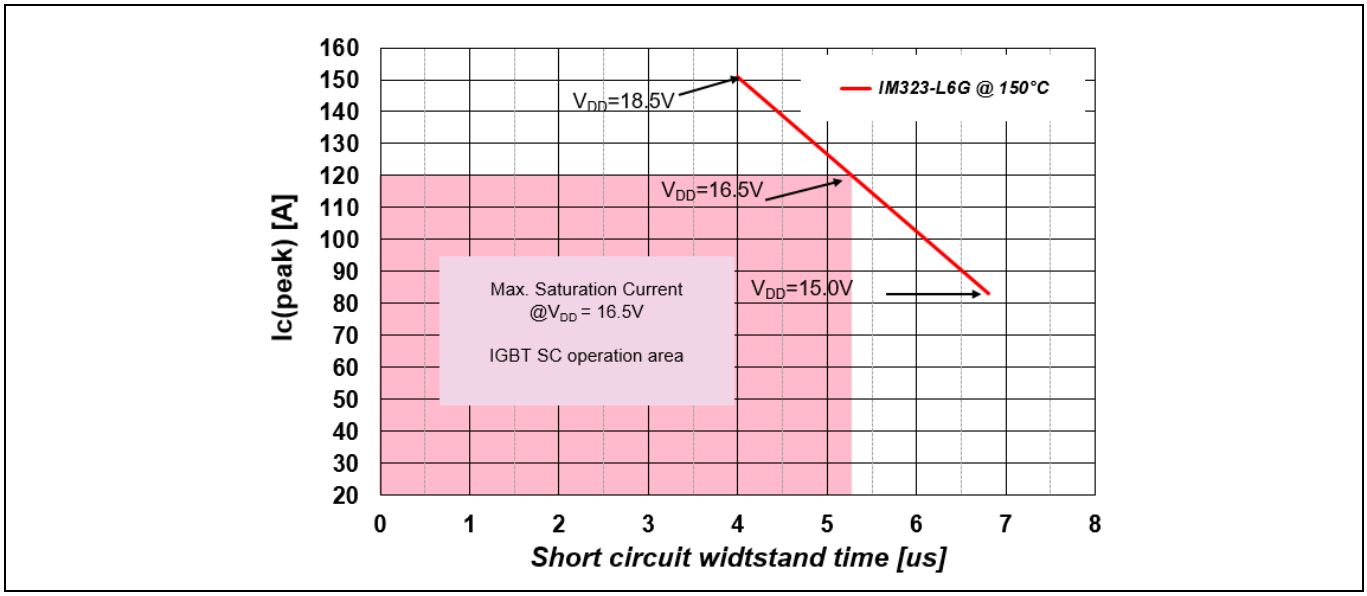

Figure 24 Typical SCSOA graph of the IM323 products (at V_{DC} = 400 V, $V_{PN(surge)}$ < 500 V, T_J = 150°C)

5.3 Fault-output circuits

As the V_{FO} terminal is of an open drain type, it must be pulled up to a higher level using a pull-up resistor. The resistor has to be calculated according to the specifications given in Table 19 and 30.

Table 19 Maximum ratings of fault-output

Item	Symbol	Condition	Rating	Unit
Fault-output supply voltage	V_{FO}	Applied between V_{FO} and V_{SS}	-1.0 ~ V_{DD} + 0.3	V
Fault-output current	I_{FO}	Sink current at the V_{FO} pin	10	mA

Table 20 Electric characteristics

Item	Symbol	Condition	Min.	Typ.	Max.	Unit
Fault-output current	I_{FO}	V_{ITRIP} = 0V, V_{FO} = 5V	-	60	-	µA
Fault-output voltage	V_{FO}	I_{FO} = 10 mA, V_{ITRIP} = 1 V	-	0.35	-	V

5.4 Sleep function

The sleep function is activated after each trigger of I_{TRIP} or after undervoltage lockout. Figure 25 shows a timing diagram.

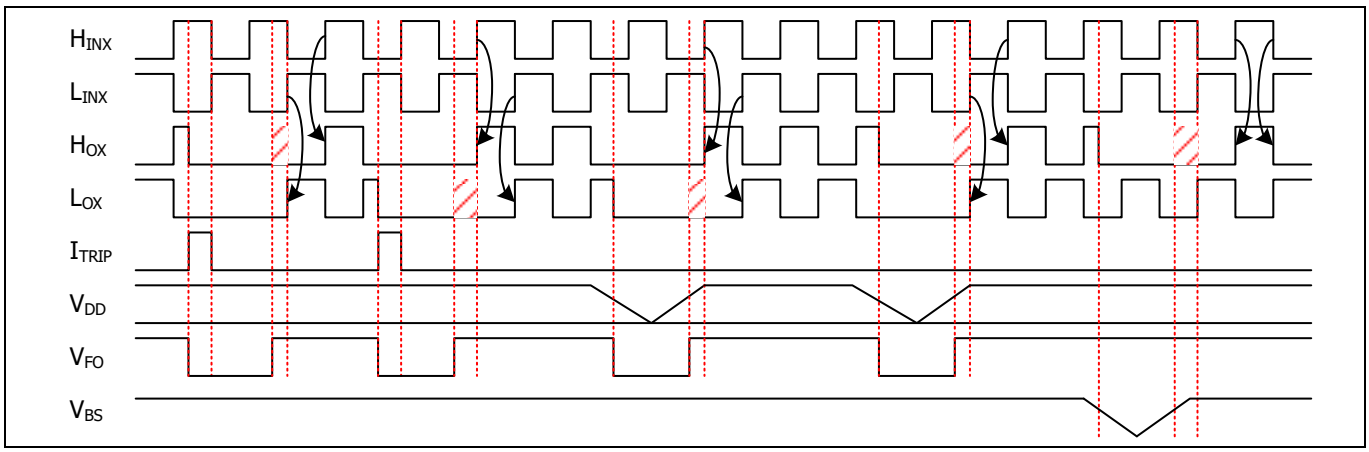

Figure 25 Timing diagram of the sleep function with I_{TRIP} and UVLO

5.5 Temperature monitor and thermal protection

The IM323 has independent pins for internal thermistors (85 kΩ at 25°C). The built-in thermistor is directly connected to the V_{SS} internally. A typical application circuit looks like the one shown in Figure 27. An external pull-up resistor connected to V_{ctr} ensures that the resulting voltage can be directly connected to the controller.

Figure 28 shows a reference board in which the pull-up resistor is set to 18 kΩ so that the V_{OT} voltage becomes 1.15 V and 0.75 V for 5 V and 3.3 V control voltage (V_{ctr}) respectively, when the thermistor temperature is 100°C.

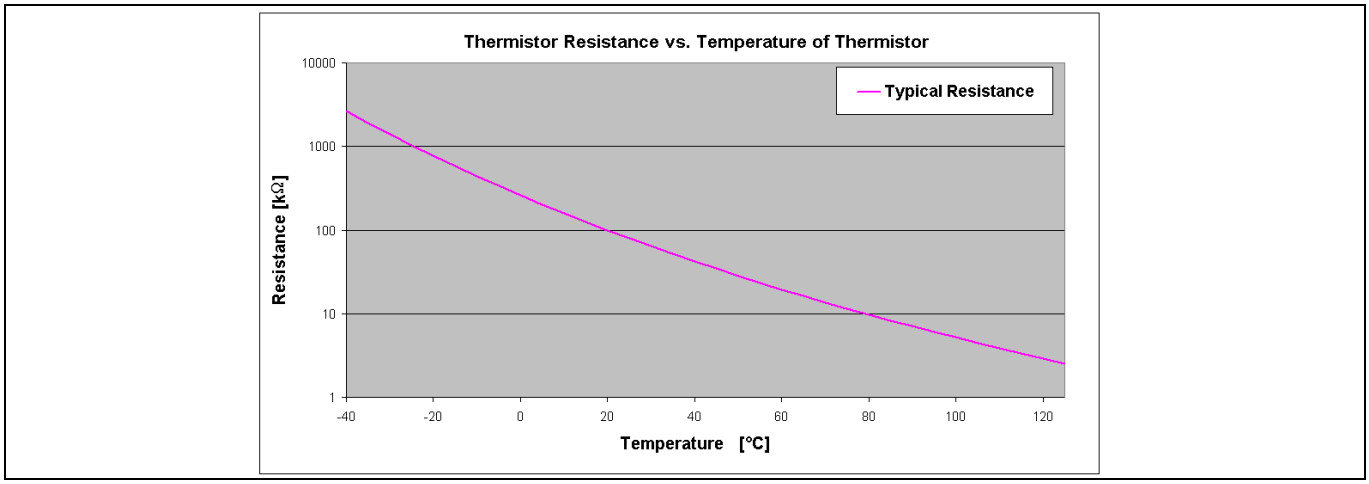

Figure 26 Internal thermistor's resistance characteristics as a function of thermistor temperature

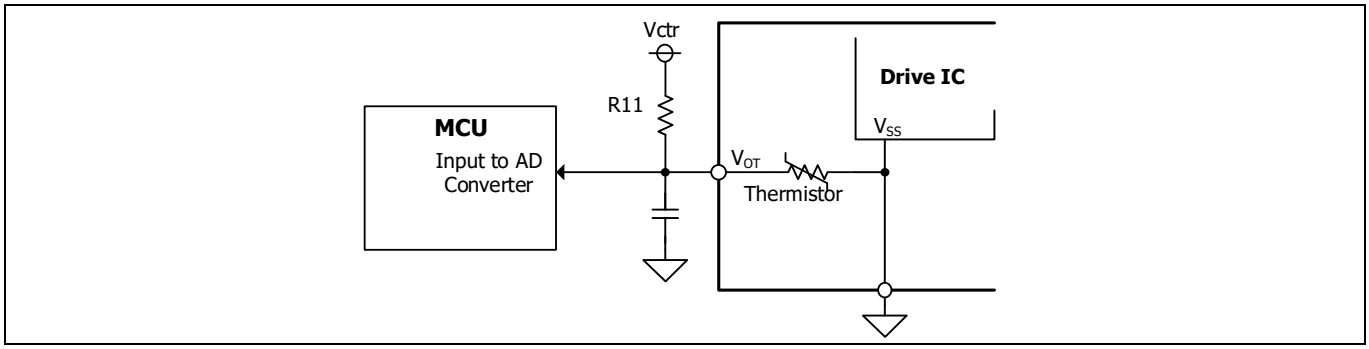

Figure 27 Circuit proposals for overtemperature protection

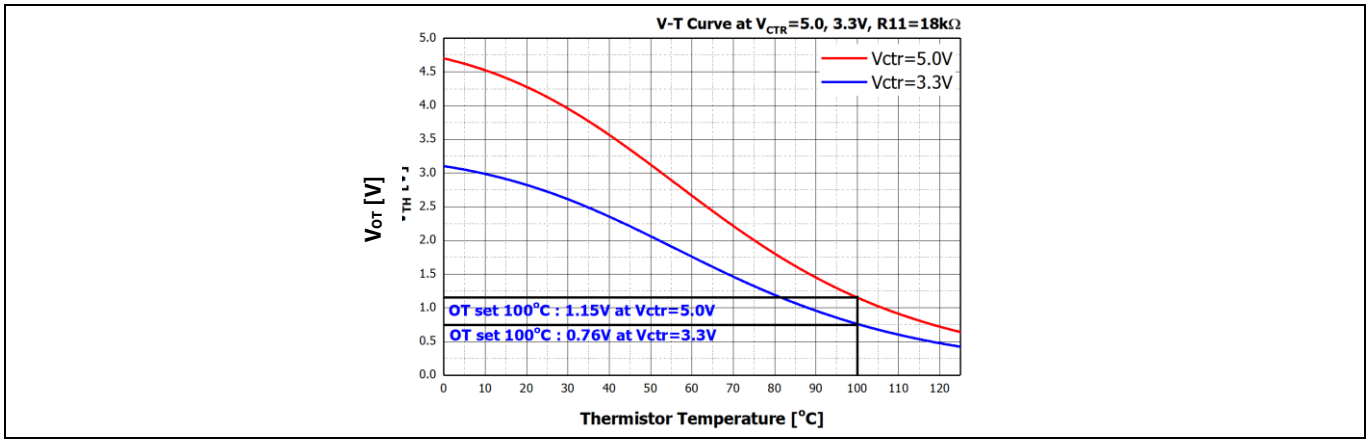

Figure 28 Voltage of the V_{OT} pin according to thermistor temperature

As shown in Figure 29 (a), the NTC thermistor is located on the inner PCB of the IPM. So, the thermistor's temperature cannot reflect the power chip's temperature directly. When the IPM is operated, the heat of the power device is transferred to the thermistor through the heat sink and package as seen in Figure 29 (b).

Figure 30 shows the relationship between $T_{J\,(ave)}$ (IGBT's average junction temperature), T_C (IPM's case temperature), and T_{NTC} (thermistor's temperature) under the conditions mentioned.

This relationship is, however, just one of example. The relationship depends on system conditions such as heat sink size, cooling system, control scheme, etc. If users want to know the relationship between $T_{J\,(ave)}$, T_C, and T_{NTC} on their systems, it is recommended that they define the relationship in their systems.

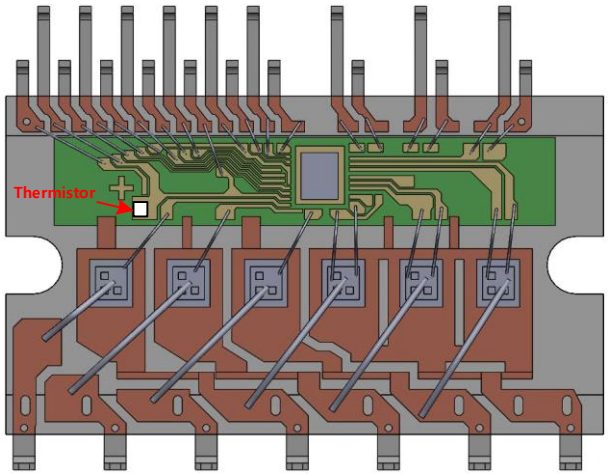

(a) Thermistor location

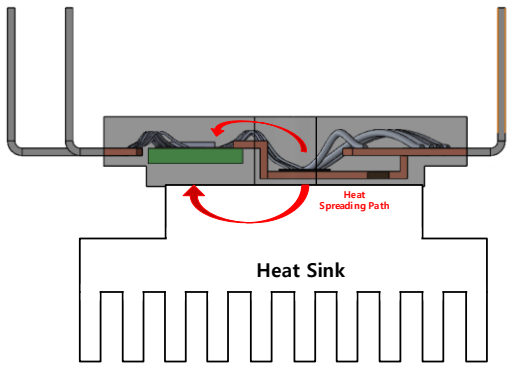

(b) Heat spreading from power devices

Figure 29 Thermistor location and heat-spread in the power devices

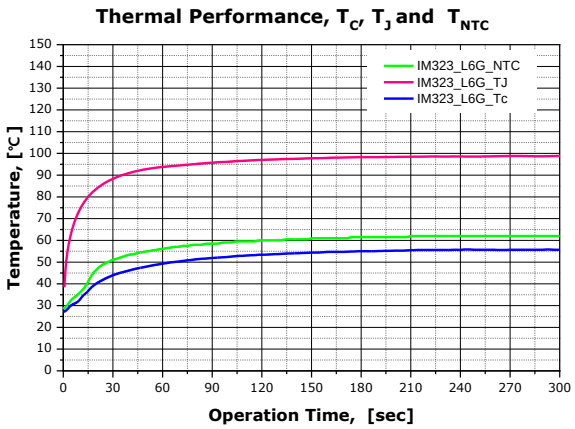

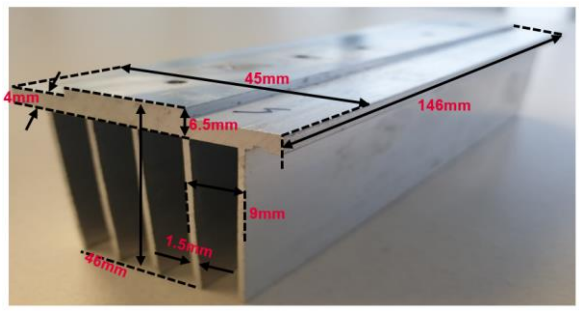

*[Heat sink information]

Figure 30 Example of a relationship between T_J, T_C, and T_{NTC} (Test conditions: V_{DC} = 340 V, V_{DD} = 15 V, I_O = 1 ~ 10 A_{peak}, F_{SW} = 6 kHz, F_O = 60 Hz, SVPWM, Force cooling with *heat sink, T_J is measured by an Infrared camera, refer to Figure 4 for T_C measurement points)

6 Bootstrap circuit

6.1 Bootstrap circuit operation

The V_{BS} voltage, which is the voltage difference between V_B (U, V, W) and V_S (U, V, W), provides the supply to the gate driver IC within the IM323. The recommended range for this supply voltage is 13.0 V to 17.5 V to ensure that the gate driver IC can fully drive the high-side IGBT. The IM323 includes an undervoltage detection function for the V_{BS} to ensure that the IC does not drive the high-side IGBT if the V_{BS} voltage drops below a specified voltage (refer to the datasheet). This function prevents the IGBT from operating in a high dissipation mode. Please note that the undervoltage lockout function of any high-side section acts only on the triggered channel without any feedback to the control level.

There are a number of ways by which the V_{BS} floating supply can be generated. One of them is the bootstrap method described in this section. This bootstrap method has the advantage of being simple and inexpensive. However, the duty cycle and the charging time are restrained by the requirement to refresh the charge in the bootstrap capacitor.

As shown in Figure 31, the bootstrap supply is formed by combining an external diode, a resistor, and a capacitor. The current flow path of the bootstrap circuit is shown in Figure 31 when the V_S is pulled down to ground (either through the low-side or the load), the bootstrap capacitor (C_{BS}) is charged through the bootstrap diode (D_{BS}) and the resistor (R_{BS}) from the V_{DD} supply. For detailed information about the bootstrap circuit, please refer to the application note — 2020-14_Bootstrap circuit design for CIPMS™ IPM series [4].

6.2 Characteristics of internal bootstrap functionalities

The IM323 includes three bootstrap functionalities in the internal gate driver IC that consist of three diodes and three resistors, as shown in Figure 3. The typical value of the internal bootstrap resistor is 37 Ω at room temperature. Other electrical characteristics are listed in Table 21.

V_{DD} of 15 V is recommended when only the integrated bootstrap circuitry is used.

Table 21 Electrical characteristics of internal bootstrap parameters

Description	Condition	Symbol	Value			Unit
			Min.	Typ.	Max.	
Repetitive peak-reverse voltage		V_{RRM}	600	-	-	V
Bootstrap diode forward current (between V_{DD} and V_B)	V_F = 4 V	I_{F_BSD}		54		mA
Bootstrap diode resistance	Between V_F = 4 V and V_F = 5 V	R_{BSD}	-	37	-	Ω
Bootstrap diode forward voltage	I_F = 0.3 mA	V_{F_BSD}	-	1.0	-	V

6.3 Initial charging of the bootstrap capacitor

Adequate on-time duration for the low-side IGBT to fully charge the bootstrap capacitor is required for initial bootstrap charging. The initial charging time (t_{charge}) can be calculated using the following equation:

$$t_{charge} \geq C_{BS} \times R_{BS} \times \frac{1}{\delta} \times \ln\left(\frac{V_{DD}}{V_{DD} - V_{BS} - V_{FD} - V_{LS}}\right) \quad (6)$$

Here, V_{FD} is the forward voltage drop across the bootstrap diode, $V_{BS(min)}$ is the minimum value of the bootstrap capacitor voltage, V_{LS} is the voltage drop across the low-side IGBT, and δ is the duty ratio of the PWM.

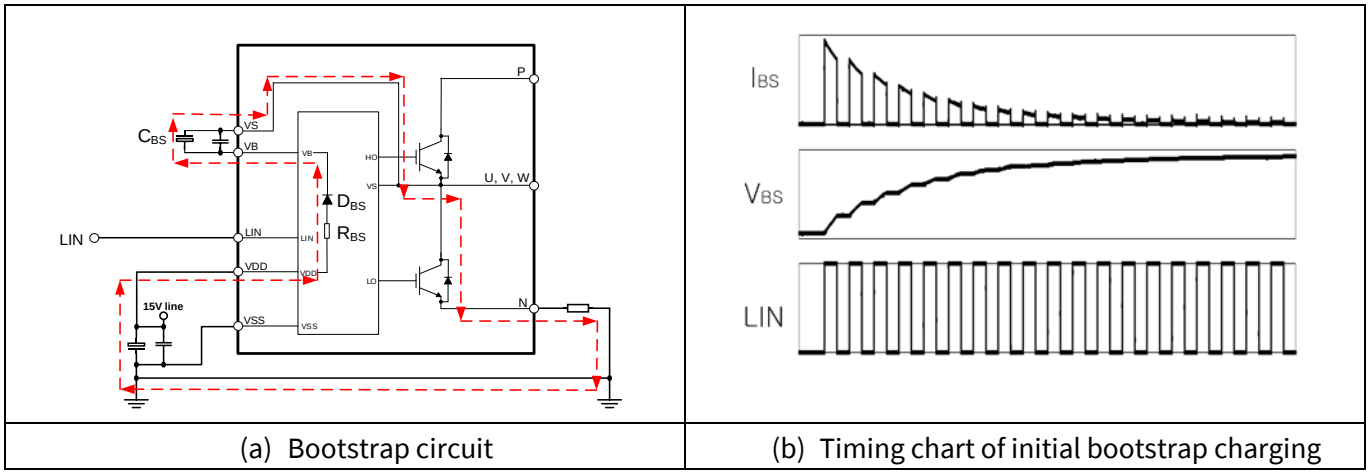

(a) Bootstrap circuit | (b) Timing chart of initial bootstrap charging

Figure 31 Bootstrap circuit operation and initial charging

6.4 Selecting the bootstrap capacitor

The bootstrap capacitance can be calculated by:

$$C_{BS} = \frac{I_{discharge} \times \Delta t}{\Delta V} \quad (7)$$

Here, Δt is the maximum ON pulse-width of the high-side IGBT, ΔV is the allowable discharge voltage of C_{BS}, and $I_{discharge}$ is the maximum discharge current of the C_{BS} mainly through the following:

- Gate charge for turning on the high-side IGBT
- Quiescent current to the high-side circuit in the IC
- Level-shift charge required by level shifters in the IC
- Leakage current in the bootstrap diode
- C_{BS} capacitor leakage current (ignore for non-electrolytic capacitors)
- Bootstrap diode reverse-recovery charge

In practice, a discharge current of 1 mA is recommended as a calculation basis for the IPM. Considering the dispersion and reliability, the capacitance is generally selected to be 2 to 3 times higher than the calculated value. C_{BS} is the only charged when the high-side IGBT is off and the V_S voltage is pulled down to ground. Therefore, the on-time of the low-side IGBT must be sufficient to ensure that the charge drawn from the C_{BS} capacitor can be fully replenished. To ensure this, there is an inherent minimum on-time of the low-side IGBT (or off-time of the high side IGBT). The bootstrap capacitor should always be placed as close to the pins of the IPM as possible. At least one low-ESR capacitor should be used to provide good local de-coupling. For example, a separate ceramic capacitor close to the IPM is essential if an electrolytic capacitor is used as the bootstrap capacitor. If the bootstrap capacitor is either of a ceramic or tantalum type, it should be adequate for local decoupling.

6.5 Charging and discharging of the bootstrap capacitor during a PWM inverter operation

As shown in Figure 31, the bootstrap capacitor C_{BS} gets charged through the bootstrap diode D_{BS} and resistor R_{BS} from the V_{DD} supply, when the high-side IGBT is off and the V_S voltage is pulled down to ground. It gets discharged when the high-side IGBT or diode are on.

Example 1: Selection of the initial charging time

This example of the calculation of the minimum value of initial charging time is given with reference to equation (6).

Conditions:

- C_{BS} = 4.7 µF, R_{BS} = 37 Ω, Duty Ratio(δ) = 0.5, D_{BS} = Internal bootstrap diode, V_{DD} = 15 V, V_{FD} =0.9 V
- $V_{BS\ (min)}$ = 13 V, V_{LS} = 0.1 V

$$t_{charge} \geq \frac{4.7\ \mu F \times 37\ \Omega}{0.5} \times \ln\left(\frac{15\ V}{15\ V - 13V\ - 0.9\ V - 0.1\ V}\right) \cong 0.98\ ms$$

To ensure safety, it is recommended that the charging time be at least three times longer than the calculated value.

Example 2: The minimum value of the bootstrap capacitor

Conditions:

- ΔV = 0.1 V, $I_{discharge}$ = 1 mA

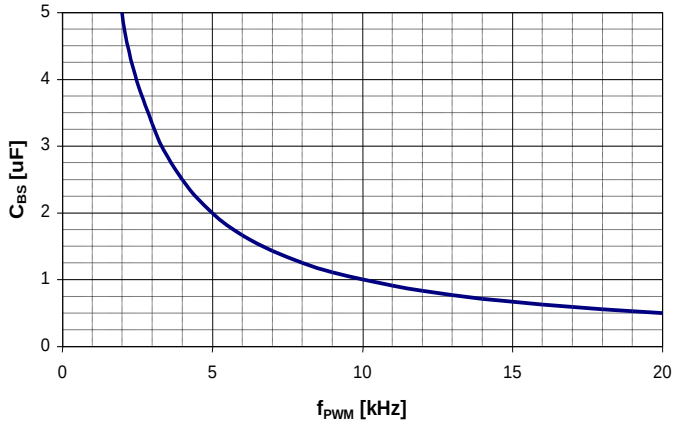

Figure 32 Bootstrap capacitance as a function of the switching frequency

Figure 32 shows the curve corresponding to equation (7) for a continuous sinusoidal modulation, if the voltage ripple ΔV_{BS} is 0.1 V. The recommended bootstrap capacitance for a continuous sinusoidal modulation method is, therefore, up to 4.7 µF for most switching frequencies. In other PWM method cases, such as discontinuous sinusoidal modulation, the t_{charge} must be set at the longest period of the low-side IGBT off.

Note that this result is only an example. It is recommended that users consider the actual control pattern and lifetime of the used components during system design.

7 Thermal system design

7.1 Introduction

The thermal design of a system is a key issue of the IM323 included in electronic systems such as drives. To avoid overheating and/or to increase reliability, two design criteria are important:

- Low power losses
- Low thermal resistance from junction to ambient

The first criterion is already fulfilled when the IM323 is chosen as the intelligent power module for the application. To get the most out of the system, choosing a proper heat sink is also necessary. A good thermal design either maximizes the power or increases the reliability of the system (by reducing the maximum temperature). This chapter provides a short introduction to power losses and heat sinks to help users understand the mode of operation and find the right heat sink for a specific application.

For the thermal design, the following details are required:

- The maximum power loss $P_{sw,i}$ of each power switch
- The maximum junction temperature $T_{J,max}$ of the power semiconductors
- The junction-to-ambient thermal resistance impedance $Z_{th,J-A}$. For stationary considerations, the static thermal resistance $R_{th,J-A}$ is sufficient. This thermal resistance comprises the junction-to-case thermal resistance $R_{th,J-C}$ as provided in the datasheets, the case-to-heat sink thermal resistance $R_{th,C-HS}$ accounting for the heat flow through the thermal interface material between the heat sink and the power module, and the heat sink-to-ambient thermal resistance $R_{th,HS-A}$. Each thermal resistance can be extended to its corresponding thermal impedance by adding thermal capacitances
- The maximum allowable ambient temperature $T_{A,max}$

Furthermore, all heat flow paths need to be identified. Figure 33 shows a typical, simplified equivalent circuit for the thermal network. This circuit omits the thermal capacitances and negligible heat paths such as the heat transfer from the module surface directly to the ambient (through convection and radiation.)

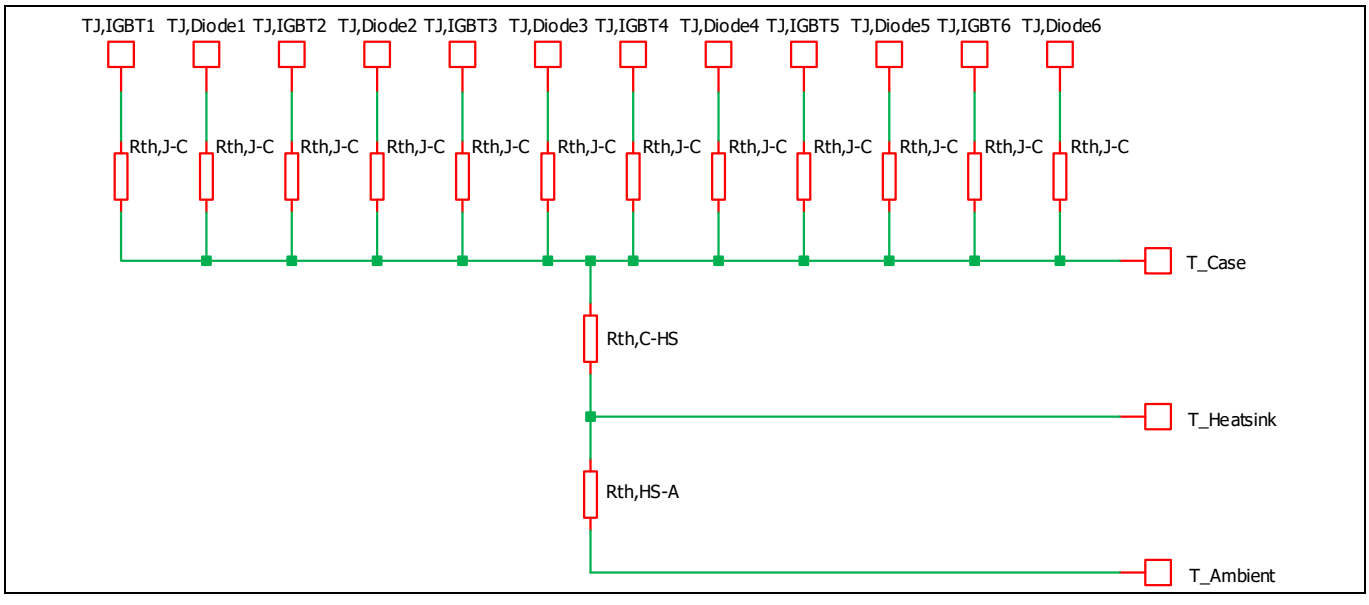

Figure 33 Simplified, thermal-equivalent circuit

7.2 Power losses

The total power loss in the IM323 is composed of conduction and switching losses in the IGBTs and diodes. The loss during the turn-off steady state can be ignored because it is very small and has little effect in increasing the device temperature. The conduction loss depends on the DC electrical characteristics of the device, i.e. the saturation voltage. Therefore, conduction loss is a function of the conduction current and the device's junction temperature. On the other hand, the switching loss is determined by dynamic characteristics such as the turn-on/off time and overvoltage/overcurrent. Therefore, to obtain accurate switching losses, the DC link-voltage of the system, the applied switching frequency, the power circuit layout, the current, and the temperature should all be considered. In this chapter, based on the PWM inverter system for motor control applications, detailed equations are provided for calculating both losses of the IM323 for a 3-phase continuous sinusoidal PWM. For information about the 3-phase discontinuous PWM, please refer to [5].

7.2.1 Conduction losses

The typical characteristics of forward drop-voltage are approximated by the following linear equations for the IGBT and the diode, respectively:

$$V_{\mathrm{IGBT}} = V_{\mathrm{I}} + R_{\mathrm{I}} \cdot i$$
$$V_{\mathrm{DIODE}} = V_{\mathrm{D}} + R_{\mathrm{D}} \cdot i \qquad (8)$$

Here,

- V_I = Threshold voltage of the IGBT
- V_D = Threshold voltage of the anti-parallel diode
- R_I = On-state slope resistance of the IGBT
- R_D = On-state slope resistance of the anti-parallel diode

If the switching frequency is high, the output current of the PWM inverter can be assumed to be sinusoidal and can be calculated using:

$$i = I_{\mathrm{peak}}\cos(\theta - \varphi) \qquad (9)$$

Where, φ is the phase-angle difference between the output voltage and the current. Using equations (8) and (9), the conduction loss of one IGBT and its anti-parallel diode can be obtained as follows:

$$P_{\mathrm{con.I}} = \frac{1}{2\pi}\int_0^{\pi} \xi (V_{\mathrm{IGBT}} \times i)\mathrm{d}\theta = \frac{I_{\mathrm{peak}}}{2\pi}V_{\mathrm{I}} + \frac{I_{\mathrm{peak}}}{8}V_{\mathrm{I}}\mathrm{MIcos}\varphi + \frac{{I_{\mathrm{peak}}}^2}{8}R_{\mathrm{I}} + \frac{{I_{\mathrm{peak}}}^2}{3\pi}R_{\mathrm{I}}\mathrm{MIcos}\varphi \qquad (10)$$

$$P_{\mathrm{con.D}} = \frac{1}{2\pi}\int_0^{\pi} (1-\xi)(V_{\mathrm{DIODE}} \times i)\mathrm{d}\theta = \frac{I_{\mathrm{peak}}}{2\pi}V_{\mathrm{D}} - \frac{I_{\mathrm{peak}}}{8}V_{\mathrm{D}}\mathrm{MIcos}\varphi + \frac{{I_{\mathrm{peak}}}^2}{8}R_{\mathrm{D}} - \frac{{I_{\mathrm{peak}}}^2}{3\pi}R_{\mathrm{D}}\mathrm{MIcos}\varphi \qquad (11)$$

$$P_{\mathrm{con}} = P_{\mathrm{con.I}} + P_{\mathrm{con.D}} \qquad (12)$$

if ξ is the duty cycle in the given PWM method, use:

$$\xi = \frac{1+\mathrm{MIcos}\theta}{2} \qquad (13)$$

Here, MI is the PWM modulation index (MI is defined as the peak-phase voltage divided by half the DC- link voltage.)

Note that the total inverter conduction losses are six times the P_{con}.

7.2.2 Switching losses

Different devices have different switching characteristics that vary according to the handled voltage/current and the operating temperature/frequency. However, the turn-on/off loss energy (joule) can experimentally be

measured indirectly by multiplying the current and voltage and integrating over time, under a given circumstance. Therefore, the linear dependency of the switching energy loss on the switched current can be expressed for one switching period as follows:

$$\text{Switching energy loss: } E_{\text{sw}} = (E_{\text{I}} + E_{\text{D}}) \times i \quad (14)$$

$$E_{\text{I}} = E_{\text{I.ON}} + E_{\text{I.OFF}} \quad (15)$$

$$E_{\text{D}} = E_{\text{D.ON}} + E_{\text{D.OFF}} \quad (16)$$

Here, E_I is the per unit switching loss energy of the IGBT and E_D is the per unit switching loss energy of its monolithic body diode. E_I and E_D can approximately be considered as constants.

As seen in equation (9), the output current can be considered a sinusoidal waveform; and the switching loss occurs every PWM period for the continuous PWM schemes. Therefore, depending on the switching frequency f_{SW}, the switching loss of one device is represented in the following equation:

$$P_{\text{sw}} = \frac{1}{2\pi}\int_0^{\pi}(E_{\text{I}} + E_{\text{D}}) \times i \times \text{f}_{\text{sw}}\text{d}\varphi = \frac{(E_{\text{I}}+E_{\text{D}})\times \text{f}_{\text{sw}}\times \text{I}_{\text{peak}}}{\pi} \quad (17)$$

Here, E_I is a unique constant related to the switching energy of an IGBT. Different IGBTs have different E_I values. E_D is constant for the diode. These should be derived through experimental measurement. From equation (17), it can be seen that the switching losses are a linear function of current and directly proportional to the switching frequency.

7.3 Thermal impedance

In practical operation, the power loss P_D is cyclic. Therefore, the transient impedance must to be considered. The thermal impedance is typically represented by the RC-equivalent circuit (Foster model) as shown in Figure 34. For pulsed power loss, the thermal capacitance effect delays the rise in junction temperature, and thus permits a heavier loading of the IM323. Figure 35 shows the junction-to-case thermal impedance curves of the IM323-LG6. The thermal resistance listed in Table 22 takes about 10 seconds to saturate.

Table 22 Thermal resistance of IM323-L6G products

Description	Symbol	Condition	Value			Unit
			Min.	Typ.	Max.	
Single-IGBT thermal resistance, junction-case	R_{thJC}	Low-side U-phase (See Figure 4 for T_C measurement point)	-	-	4.7	K/W
Single-diode thermal resistance, junction-case	$R_{thJC,D}$		-	-	7.4	K/W

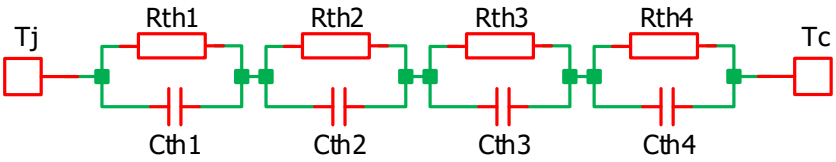

Figure 34 Thermal impedance of the RC-equivalent circuit

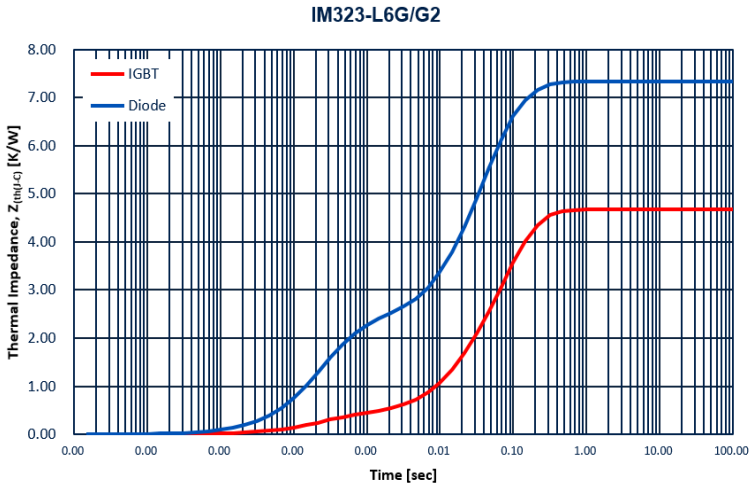

Figure 35 Thermal impedance curves of the IM323-L6G (based on single-chip heating)

7.4 Temperature rise considerations and calculation example

The on-line simulation tool [4] for CIPOS™ Tiny IM323 IPMs helps in calculating power losses and estimated temperature. The result of loss calculation using typical characteristics is shown in Figure 36 as “Effective current versus carrier frequency characteristics” for V_{PN} = 300 V, V_{DD} = 15 V, $V_{CE\,(sat)}$ = typical, switching loss = typical, T_J = 150°C, T_C = 100°C, $R_{th\,(J-C)}$ = Max., P.F = 0.8, 3-phase continuous PWM modulation, and 60 Hz sine waveform output.

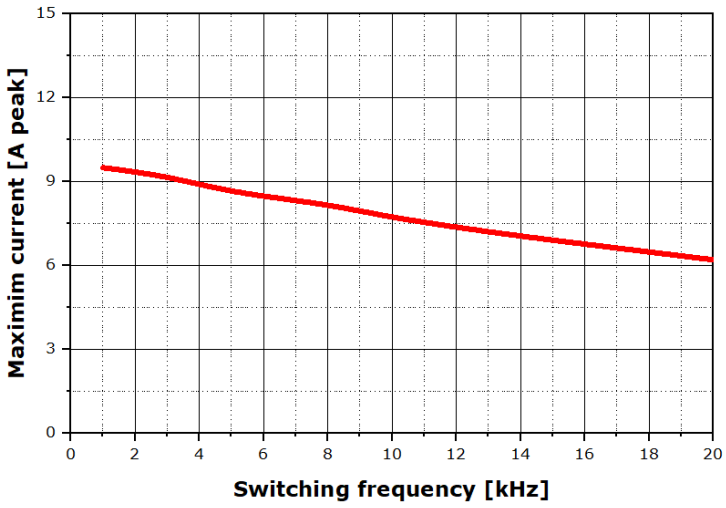

Figure 36 Power losses and junction temperature at a given condition

7.5 Heat sink selection

7.5.1 Required heat sink performance

If the power losses, the junction to case thermal resistance values, and the maximum ambient temperature are known, the required thermal resistance of the heat sink and the thermal interface material can be calculated according to **Error! Reference source not found.** from,

$$T_{\text{J_IGBT,max}} = T_{\text{A,max}} + \sum_k (P_{\text{D_IGBT,k}} + P_{\text{D_diode,k}}) \cdot R_{\text{th,HS-A}} + \sum_k (P_{\text{D_IGBT,k}} + P_{\text{D_diode,k}}) \cdot R_{\text{th,C-HS}} + Max(P_{\text{D_IGBT,k}} \cdot R_{\text{th,J-C_IGBT,k}}) \quad (18)$$

Where $P_{D,k}$ and $R_{th,J\text{-}C,k}$ are power loss and thermal resistance of each power switch inside the IPM.

The equation (18) assumes IGBTs run hotter than diodes which is valid for the motor drive applications for home appliances. The equation needs to be modified for the operating modes such as braking or rectification where diodes run hotter than IGBTs.

For three-phase bridges, one can simply assume that all power switches dissipate the same power, and all have the same $R_{th,J\text{-}C}$. This leads to the required thermal resistance from case to ambient.

$$R_{\text{th,C-A}} = R_{\text{th,C-HS}} + R_{\text{th,HS-A}} = \frac{T_{\text{J,max}} - P_{\text{D}} \cdot R_{\text{th,J-C}} - T_{\text{A,max}}}{\sum P_{\text{D}}} \quad (19)$$

As an example, Then following example shows a scenario where the power switches of a washing machine drive dissipate a maximum for 3.5 W power each; the maximum ambient temperature is 50°C, the maximum junction temperature is 150°C and the $R_{th,J\text{-}C}$ is 3.0 K/W. The required thermal resistance from case to ambient becomes,

$$R_{\text{th,C-A}} \leq \frac{150\,℃ - 3.5\ W \times 3\ K/W - 50\,℃}{6 \times 3.5\ W} = 4.3\ K/W$$

If the heat sink temperature is limited to 100°C, an even lower thermal resistance is required. Then:

$$R_{\text{th,C-A}} \leq \frac{100\,℃ - 50\,℃}{6 \cdot 3.5\ W} = 2.4\ K/W$$

Smaller heat sinks with higher thermal resistances may be acceptable if the maximum power is only required for a short time (below the time constant of the thermal resistance and the thermal capacitance). However, this requires a detailed analysis of the transient power and temperature profiles. The larger the heat sink and the larger its thermal capacitance, the longer it takes to heat up the heat sink.

7.5.2 Heat sink characteristics

Heat sinks are characterized by three parameters:

- Heat transfer from the heat source to the heat sink
- Heat transfer within the heat sink (to all surfaces of the heat sink)
- Heat transfer from heat sink surface to ambient

7.5.2.1 Heat transfer from the heat source to the heat sink

Two factors need to be considered to provide good thermal contact between the heat source and the heat sink:

- **Flatness of the contact area**
  Due to the unevenness of surfaces, a thermal interface material needs to be applied-kh between the heat source and heat sink. Since such materials have low thermal conductivity (< 10 K/W), they should be as thin as possible. On the other hand, they also need to fill out the space between the heat source and the heat sink. Therefore, the unevenness of the heat sink should be as low as possible. In addition, the particle size of the interface material must fit the roughness of the module and the heat sink surfaces. Particles that are too large will unnecessarily increase the thickness of the interface layer, thereby increasing the thermal resistance. Particles that are too small will not provide good contact between the two surfaces and that will also lead to a higher thermal resistance.
- **Mounting pressure**
  The higher the mounting pressure, the better the interface material disperses. Excessive interface material is also squeezed out creating a thinner interface layer with lower thermal resistance.

7.5.2.2 Heat transfer within the heat sink

The heat transfer within the heat sink is mainly determined by the:

- **Heat sink material**
  The material needs to be a good thermal conductor. Most heat sinks are made of aluminum (λ ≈ 200 W/ (m*K).) Copper is heavier and more expensive but also nearly twice as efficient (λ ≈ 400 W/ (m*K).)
- **Fin thickness**
  If the fins are too thin, the thermal resistance from the heat source to fin becomes too high and the efficiency of the fin decreases. Therefore, there is no benefit in making the fins thinner to increase the surface area by adding more fins.

7.5.2.3 Heat transfer from heat sink surface to ambient

Heat transfers to the ambient mainly by convection. The corresponding thermal resistance is defined as:

$$R_{\mathrm{th,conv}} = \frac{1}{\alpha \cdot A} \qquad (20)$$

Here α is the heat transfer coefficient and A is the surface area.

There are two important parameters to consider:

- **Surface area**
  Heat sinks require a large surface area to easily transfer the heat to the ambient. However, as the heat source is assumed to be concentrated at one point and not uniformly distributed, the total thermal resistance of a heat sink does not change linearly with length. Also, as discussed in section 7.5.2.2, increasing the surface area by increasing the number of fins does not necessarily reduce the thermal resistance.
- **Heat transfer coefficient (aerodynamics):** This coefficient depends strongly on the air flow velocity as shown in Figure 37 If no force is induced externally, it is called a natural convection. Otherwise, it is called forced convection. Heat sinks with very small fin spacing do not allow good air flow. If a fan is used, the fin gap may be lower than needed for natural convection because the fan forces the air through the space between the fins.

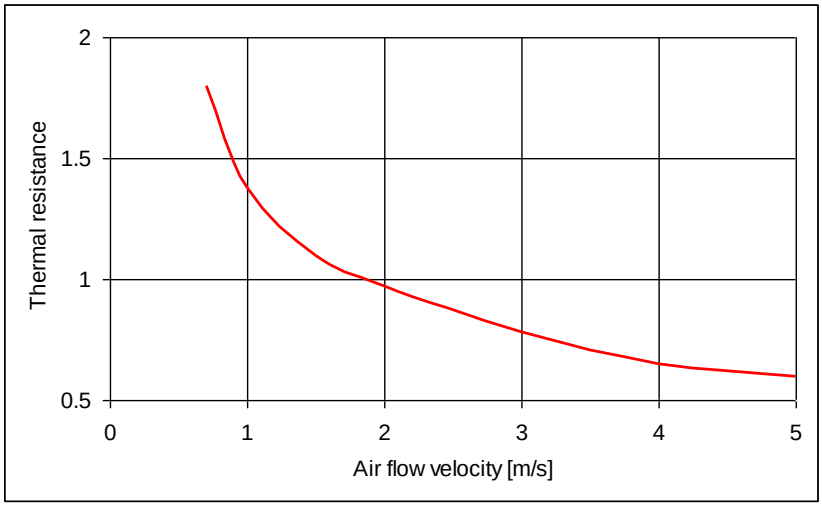

Figure 37 Thermal resistance as a function of the airflow velocity

Furthermore, in the case of natural convection, the heat sink efficiency depends on the temperature difference between the heat sink and the ambient, i.e. on the dissipated power. Some manufacturers, such as Aavid Thermalloy, provide a correction table that allows users to calculate the thermal resistance depending on the temperature difference. Figure 38 shows the heat sink efficiency degradation for natural convection. Please note that the thermal resistance is 25% higher at 30 W than at 75 W.

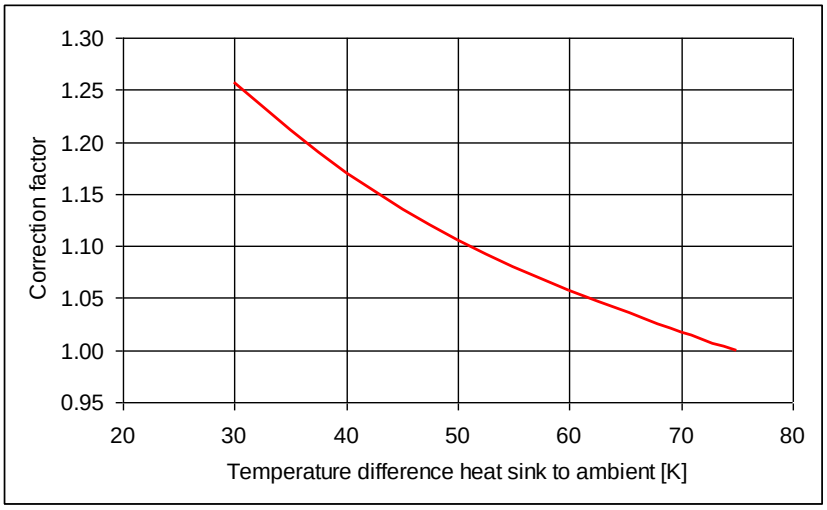

Figure 38 Correction factors for temperature

The positioning of the heat sink also plays an important role for the aerodynamics. In the case of natural convection, the best mounting is done with vertical fins, as the heated air tends to move upwards due to buoyancy. Furthermore, it should be ensured that there are no significant obstructions impeding the air flow.

Radiation also supports heat transfer from the heat sink to the ambient. To increase radiated heat, users can use anodized heat sinks with black surface. This, however, decreases the thermal resistance of the heat sink by a few percent in the case of natural convection. Since radiated heat is negligible in the case of forced convection, blank heat sinks can be used if no fan is used with the heat sink.

The discussions in this section highlight that a single thermal resistance value cannot be assigned to any one particular heat sink.

7.5.3 Selecting a heat sink

Unfortunately, there is no straightforward formula for selecting heat sinks. Finding an appropriate heat sink includes an iterative process of choosing and testing heat sinks. To get a first rough estimate of the required volume of the heat sink, start with the estimated volumetric thermal resistances as listed in Table 23 (Taken from [7]). The table gives only an initial pointer; the actual resistance may vary depending on several parameters such as actual dimensions, type, orientation, and so on.

Table 23 Volumetric thermal resistance

Flow conditions [m/s]	Volumetric resistance [cm³ °C/W]
Natural convection	500 – 800
1.0	150 – 250
2.5	80 – 150
5.0	50 – 80

One can roughly assume that the volume of a heat sink needs to be quadrupled to halve its thermal resistance. This gives a hint whether natural convection is sufficient for the available space, or a forced convection is required.

To get an optimized heat sink for any given application, users can contact heat sink manufacturers or consultants. Further tips and references can be found in [7].

When contacting heat sink manufacturers to find a suitable heat sink, please note the conditions under which the given thermal resistance values are valid. They might be given either for a point source or for a heat source that is evenly distributed over the entire base area of the heat sink. Also ensure that the fin spacing is optimized for the corresponding flow.

8 Mounting and soldering method

8.1 Electrical spacing

The electric spacing specifications of the IM323 are listed in Table 24.

To increase the clearance and creepage between the terminal pins and the heat sink, the shape of the heat sink should be modified as shown in Figure 39.

Table 24 Minimum insulation distance in the IM323

Item	Clearance (mm)	Creepage (mm)	Remark
Between live terminals and high potential	2.50	3.00	
Between terminal and heat sink[(a)]	1.55	3.35	With normal heat sink[(a)]
Between terminal and heat sink[(b)]	3.05 (1.55 + 1.5*)	3.85 (3.35 + 0.5**)	Depend on the heat sink design*, **

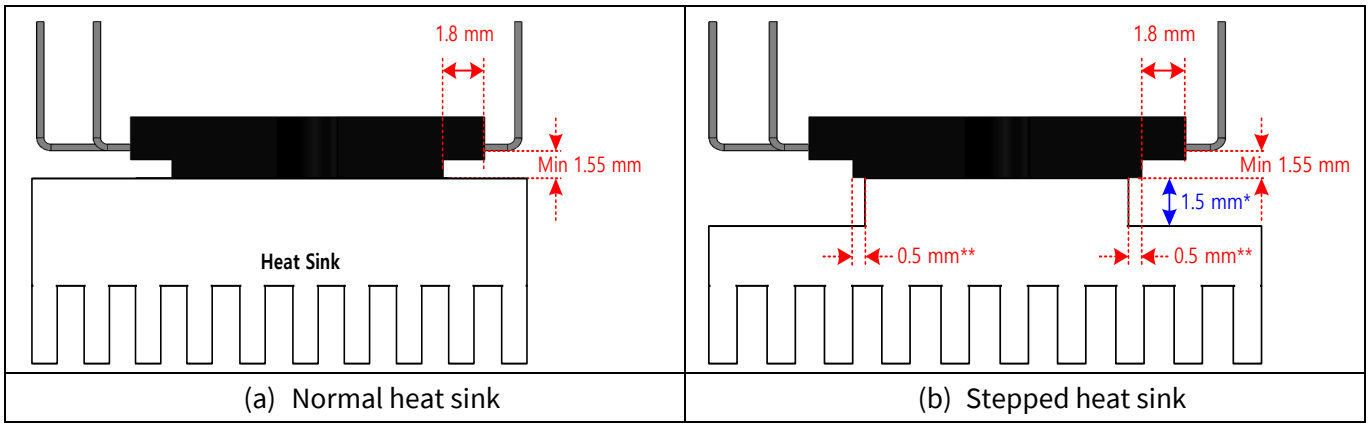

(a) Normal heat sink (b) Stepped heat sink

Figure 39 Recommended stepped heat sink shape

As shown in Figure 40, in terms of thermal performance for each condition, the thermal gap is below 1%.

Item	Normal heatsink (Reference)	Stepped heatsink (0.0 mm)	Stepped heatsink (0.5 mm)	Unit
Image		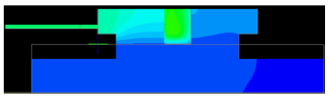	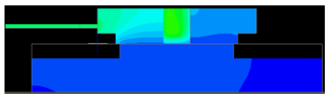	
P_{loss}	7.5 (Total: 45 W)	7.5 (Total: 45 W)	7.5 (Total: 45 W)	[W]
T_{vj}	120.444	121.072	121.518	[°C]
T_C	86.2728	86.8345	87.1167	[°C]
$R_{th(J-C)}$	4.556	4.565	4.587	[K/W]
R_{th} ratio	100	100.2	100.7	[%]

Figure 40 Thermal simulation with various heat sinks

8.2 Mounting the heat sink

8.2.1 General guidelines

An adequate heat sink capability of the IPM can only be achieved if the heat sink is suitably mounted. This is a fundamental requirement to meet the electrical and thermal performance criteria of the module. The following general points related to the heat sink should be verified when mounting the IPM on the heat sink:

- There must be no burrs on an aluminum or copper heat sink
- Screw holes must be countersunk
- There must be no unevenness or scratches on the heat sink
- The surface of the module must be completely in contact with the heat sink
- There must be no oxidation, stains, or burrs on the heat sink surface

To improve thermal conductivity, apply silicone grease on the contact surface between the IPM and heat sink and spread a homogenous layer of the grease (100 µm thick) over the IPM substrate surface. Non-planar surfaces of the heat sink may require a thicker layer of the thermal grease. Please refer to the specifications from the heat sink manufacturer. Note that in this scenario, the heat sink covers the backside of the module completely. The functional behavior may differ in scenarios where a portion of the module's backside is not in contact with the heat sink.

To prevent heat dissipation due to warping of the substrate, tighten the mounting screws gradually and sequentially while maintaining a left/right balance in the pressure applied.

The application PCB design must ensure that the plane of the module's backside and the plane of the heat sink are in parallel, to achieve minimal package tension and optimal module contact with the heat sink. Please check the mechanical specifications of the module given in the datasheets.

It is good engineering to verify the function and thermal conditions by through detailed measurements. It is best to use a final application inverter system that is assembled with the final production process, to achieve high-quality applications.

8.2.1.1 Recommended tightening torque

As shown in Table 25, the tightening torque of M3 screws is specified as a minimum of MS = 0.59 N·m and a maximum of MS = 0.78 N·m. The screw holes must be centered to the screw openings of the mold compound so that the screws do not contact the mold compound. If an insulating sheet is used, the sheet should be larger than the IPM and aligned accurately when attached. It is important to ensure that no air is enclosed by the insulating sheet. Generally, insulating sheets are used in the following cases:

- When the ability of withstand primary and secondary voltages is necessary to achieve the required safety standards against hazardous situations
- When the IM323 must be insulated from the heat sink
- To reduce radiated noise or eliminate other signal-related problems when measuring the module

Table 25 Mechanical characteristics and ratings A

Item	Condition		Value			Unit
			Min.	Typ.	Max.	
Mounting torque	Mounting screw and washer: M3		0.59	0.69	0.78	N·m
Terminal strength pull	Control terminal: load 5 N Power terminal: load 10 N	JEITA-ED-4701	10			S
Terminal strength bending	Control terminal: load 2.5 N Power terminal: load 5 N 90° bending	JEITA-ED-4701	2			times
Backside curvature	See Figure 41		0	-	110	µm
Flatness of outer heat sink	See Figure 42		-50	-	100	µm
Weight			-	5.6	-	g

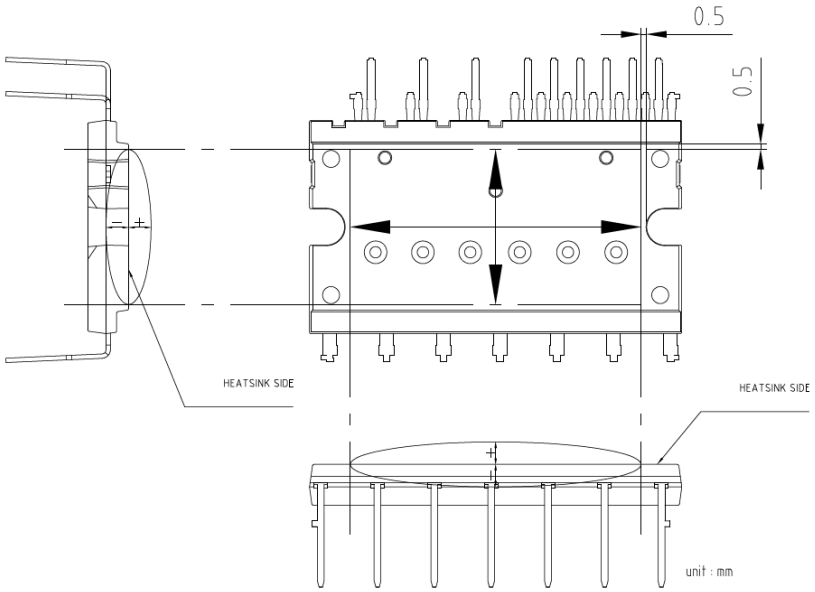

Figure 41 Backside curvature measurement position

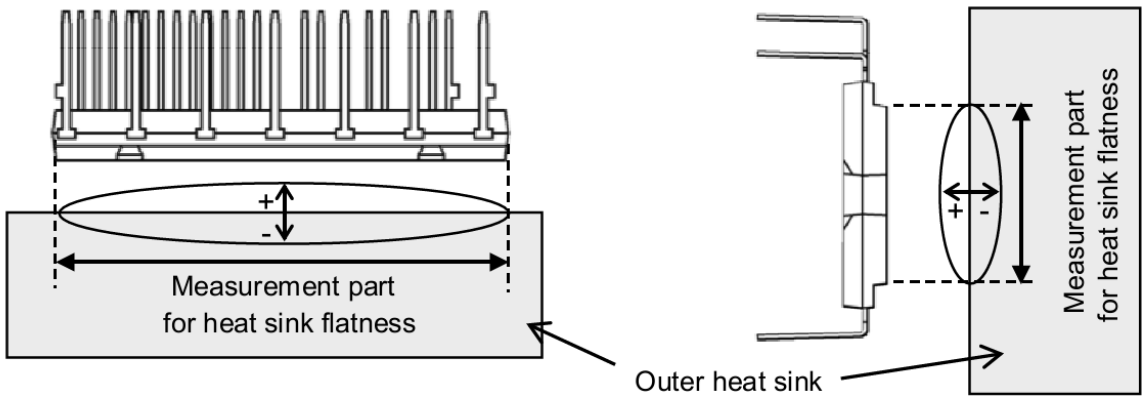

Figure 42 Heat sink flatness measurement position

8.2.1.2 Tightening screws in the heat sink

The tightening of the screws is the main process of attaching a module to the heat sink. Usually an interface pad that extends to the edge of the module and contains the fixing holes is attached to the heat sink surface. Using M3 fixing screws in conjunction with a spring washer and a plain washer is recommended. The spring washer must be assembled between the plain washer and the screw head. The screw torque must be monitored by the fixing tool.

Tightening process:

1. Align module with the fixing holes.
2. Insert screw A with washers and perform the pre-screwing.
3. Insert screw B with washers and perform the pre-screwing.
4. Tighten screw A to the final torque.
5. Tighten screw B to the final torque.

Note: The pre-screwing torque is set to 20–30% of the maximum torque rating.

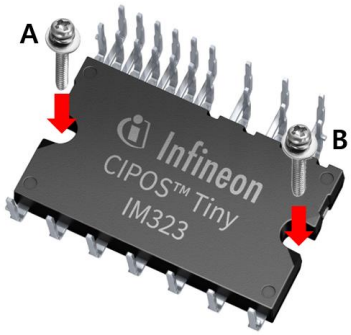

Figure 43 Recommended sequence for tightening the screws: Pre-screwing A → B, Final screwing A → B

8.2.1.3 Mounting the screw

M3 SEMS screws (JIS B1256/JIS B1188) are recommended for attaching a module to the heat sink. Table 26 lists the specifications.

Table 26 Recommended screw specifications (typical)

Screw dimensions				Flat washer		Spring washer	
Size	Thread pitch	A Head diameter	H Head height	D Outer diameter	W Thickness	D1 Outside diameter	B x T
M3	0.5	5.2	2.0	7.0	0.5	5	1.1 x 0.7

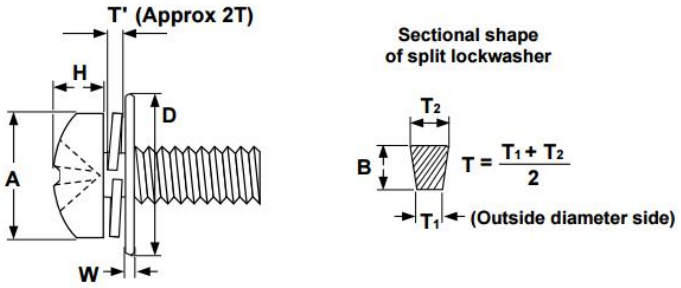

8.2.1.4 Thermal performance under various mounting torques

Since the module surface and heat sink are not perfectly flat, contact pressure and mounting torque can affect the thermal performance. According to the results shown in Figure 44, higher thermal resistance values (the junction-to- heat sink thermal resistance, $R_{th(J-H)}$) were measured below 0.1 (Nm), and torque levels ranging between 0.1 to 0.8 (Nm) were stable values in the IM323 package.

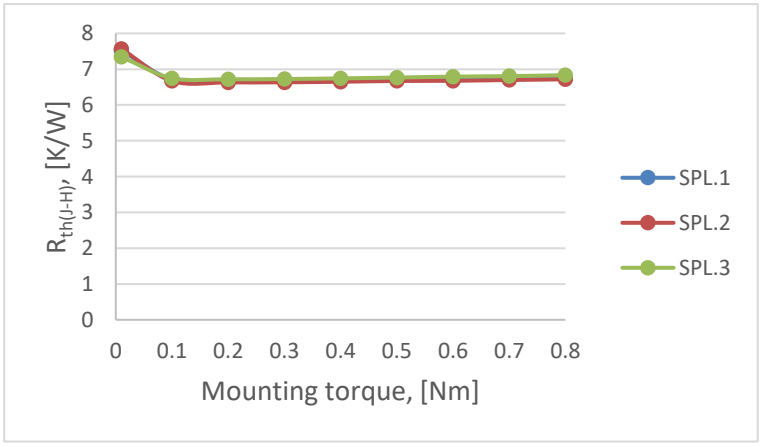

Figure 44 Thermal resistance under various mounting torques

8.3 Soldering conditions

8.3.1 Wave soldering

Wave soldering is a large-scale soldering process through which electronic components are soldered on a PCB to form an electronic assembly. The name is derived from the process used for soldering—a tank is used to hold a quantity of molten solder, the components are inserted into or placed on the PCB, and the loaded PCB is passed across a pumped wave or cascade of solder. The solder wets the exposed metallic areas of the board (those not protected with solder mask), creating a reliable mechanical and electrical connection.

The leads of trough-hole devices (THD) are long and straight at the end. Therefore, they can be inserted into the drill holes in the PCBs and be attached by wave soldering. Only their leads that extend through the drill holes in the PCB come in contact with the hot solder. The body of the package is heated by the hot leads [8].

This method has two consequences:

- The package body stay cooler than in the case of reflow soldering
- The temperature gradient between the leads and the body, and inside the package is greater than in the case of reflow soldering

Therefore, in wave-solderable THD the heat resistance is tested according to JESD22-B106 and IEC668 2-20 (typically 260°C, 10 s).

Immersing the entire package body into the molten solder is not recommended because THDs, generally, are not suited for such harsh temperature shocks.
Dual-wave soldering is the most commonly used wave-soldering method (see Figure 45). The peak temperatures, ramp rates, and time used depend on the material and the wave-soldering equipment.

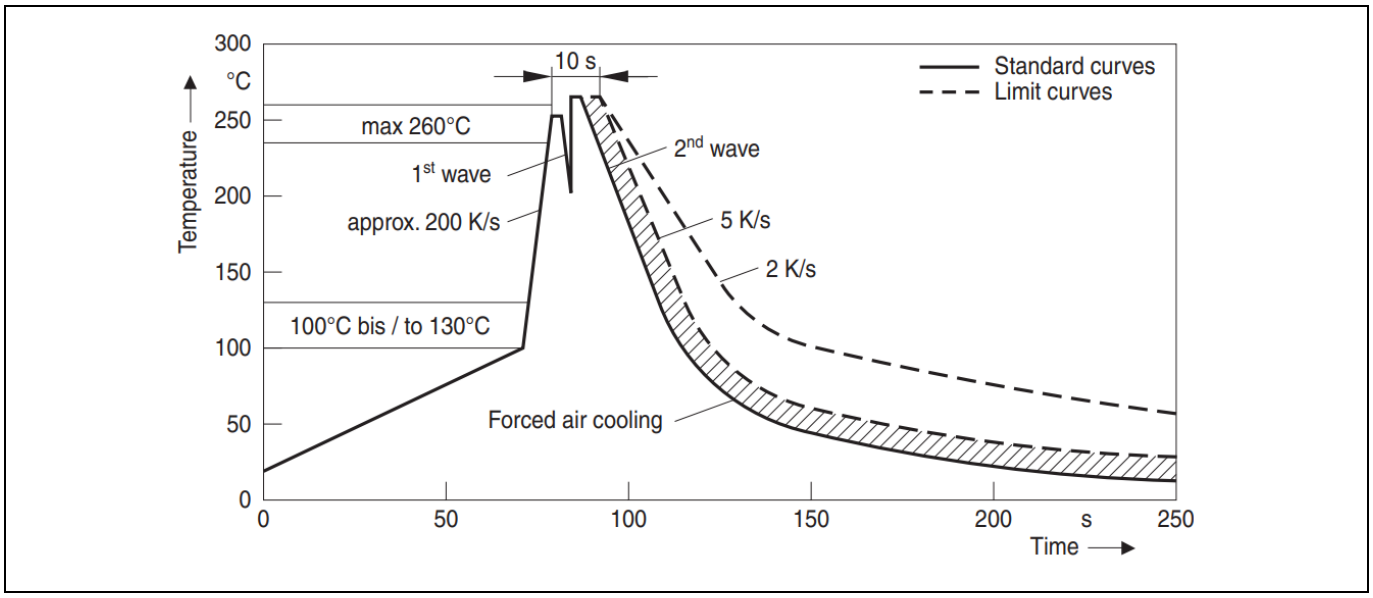

Figure 45 Typical dual-wave soldering profile

8.3.2 Manual soldering

Considering the glass transition temperature (T_g) of the package mold resin and the thermal withstand capability of the internal chips and assembly, the temperature of the lead root should be kept below 150°C and the iron tip should touch the lead only at its tip, away from the package mold body. It is recommended that the soldering time be as short as possible.

Testing method with a manual solder iron: ATC-2450-3 (ARIM), 50 W:

- Put the soldering tip of the 50 W iron (temperature set to upper conditions) on the terminal within 1 mm of the terminal end-point and measure the temperature rise of the terminal root-part using the thermocouple installed on the terminal root

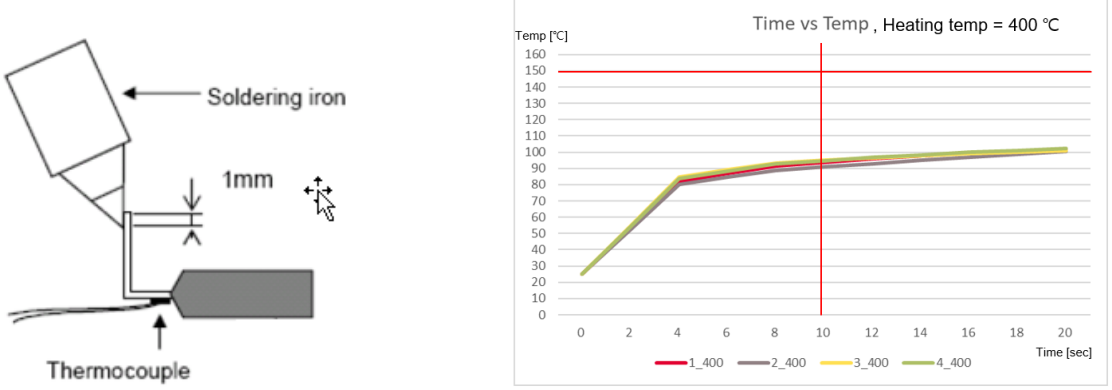

Figure 46 Heating and measuring point, temperature alteration of the terminal root (example)

Recommendations for manual soldering of the IM323 series:

- The available range of temperature is 350–400°C (for 10 sec)
- Temperature over 400°C is not recommended as it can delaminate the lead after soldering
- Mass production is not recommended as it may be difficult to control the amount of solder applied

9 Package handling guidelines

When installing a module to a heat sink, using excessive and uneven tightening force might stress the inside chips. This can lead to the breakage or degradation of the device. Figure 43 shows an example of the recommended fastening order.

Some basic guidelines to follow are:

- Do not over-torque when mounting the screws. Excessive mounting torque may damage the module holes, the screws, and the heat sink
- Avoid one-side tightening stress. Uneven mounting can damage the module holes
- For effective heat dissipation, enlarge the contact area as much as possible. This also minimizes the contact thermal resistance
- Ensure the thermal conductive grease is applied properly over the contact surface between the module and the heat sink. This also protects the contact surface from corrosion. The grease should be of stable quality and have long-term durability over a wide range of operating-temperatures
- Use a torque wrench to tighten till the specified torque rating. Exceeding the maximum torque limitation may damage or degrade the module
- Make sure there is no dirt remaining on the contact surface between the module and the heat sink
- All equipment used to handle or mount the IPM must comply with the relevant ESD standards. This includes transportation, storage, and assembly. The module itself is an ESD-sensitive device. It may, therefore, get damaged in case of ESD shocks
- Do not shake or grasp the heat sink. In particular, avoid any shock to the PCB by grasping only the heat sink. This could crack or break the package

9.1 Storage guidelines

9.1.1 Recommended storage conditions

Temperature range: 5–40°C

Relative humidity range: 10–75%

- Avoid leaving the CIPOS™ IPM exposed to moisture or direct sunlight. Be particularly careful during rainfall or snowfall
- Use storage areas that have minimal temperature fluctuation

Rapid temperature changes can create moisture condensation on the stored CIPOS™ IPM, resulting in lead oxidation or corrosion, and degraded soldering ability.

- Do not allow the CIPOS™ IPM to be exposed to corrosive gasses or dusty conditions
- While storing, ensure no excessive external forces or load is applied on the CIPOS™ IPM
- If storing the modules for a long time (more than one year), ensure they are kept dry
- Before using a module that has been in storage for a long time ensure that there is no visible flaw, stain, or rust on the exterior

9.2 Packing specification

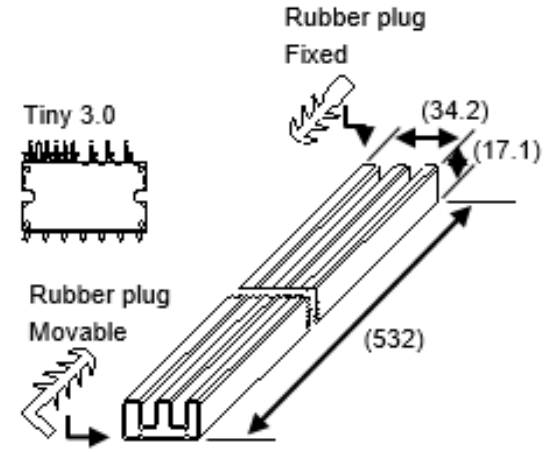

Quantity

15pcs per 1 Tube

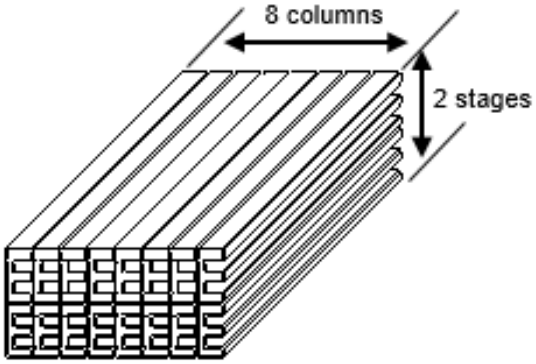

Total amount in box (max):

Tube quantity: 2 x 8 = 16pcs
IPM quantity : 16 x 15 = 240pcs

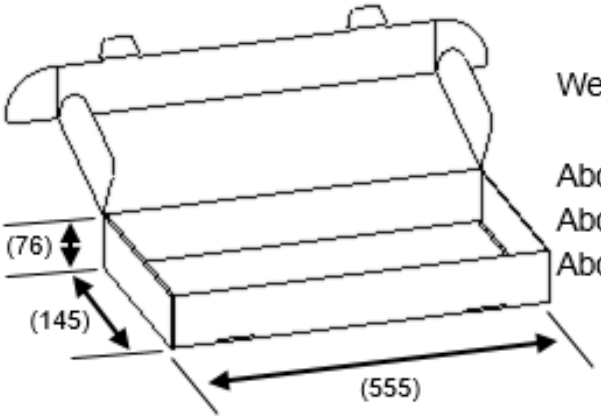

Weight (max):

About 5.6g per 1pcs of Tiny3.0
About 178g per 1tube
About 3.1kg per 1box

spacers put on the top and bottom of the box. if there is some space on top of the box. additional buffer materials are also inserted.

Figure 47 Packing specification

10 References

1. [1] Infineon Technologies, application note, AN-2020-18 “Introduction to discrete 650 V TRENCHSTOP™ IGBT6 and 600 V reverse conduction IGBT RC-D2 families”
2. [2] R. Keggenhoff, Z.Liang, Andre Arens, P. Kanschat, R. Rudolf. ‘Novel SOI Driver for Low Power Drive Applications,’ Power Systems Design Europe Nov. 2005
3. [3] W. Frank, J. Oehmen, A. Arens, D. Chung, J. Lee, “A new intelligent power module for home appliances”, Proceedings of PCIM 2009, Nuremberg, Germany
4. [4] Infineon Technologies, application note, AN-2020-14 “Bootstrap circuit design for CIPMS™ IPM series”
5. [5] D. Chung, S. Sul, “Minimum-Loss Strategy for three-Phase PWM Rectifier”, IEEE Transactions on Industrial Electronics, Vol. 46, No. 3, June 1999
6. [6] IPM 3-phase Inverter Simulator, https://plex.infineon.com/plexim/ipmmotor.html
7. [7] S. Lee, “How to select a heat sink”, Electronics Coolings, Vol.1, No.1, June 1995
8. [8] Infineon Technologies, application note “General Recommendations for Assembly of Infineon Packages”

Revision history

Major updates since the last revision are listed here.

Revision	Date	Description of change
Ver 1.0	2022-08-30	Initial release

Trademarks
All referenced product or service names and trademarks are the property of their respective owners.

Edition 2022-08-30

Published by

Infineon Technologies AG

81726 Munich, Germany

© 2022 Infineon Technologies AG. All Rights Reserved.

Do you have a question about this document?

Email: erratum@infineon.com

Document reference
AN2021-04

IMPORTANT NOTICE

The information contained in this application note is given as a hint for the implementation of the product only and shall in no event be regarded as a description or warranty of a certain functionality, condition or quality of the product. Before implementation of the product, the recipient of this application note must verify any function and other technical information given herein in the real application. Infineon Technologies hereby disclaims any and all warranties and liabilities of any kind (including without limitation warranties of non-infringement of intellectual property rights of any third party) with respect to any and all information given in this application note.

The data contained in this document is exclusively intended for technically trained staff. It is the responsibility of customer's technical departments to evaluate the suitability of the product for the intended application and the completeness of the product information given in this document with respect to such application.

For further information on the product, technology, delivery terms and conditions and prices please contact your nearest Infineon Technologies office (**www.infineon.com**).

Please note that this product is not qualified according to the AEC Q100 or AEC Q101 documents of the Automotive Electronics Council.

WARNINGS

Due to technical requirements products may contain dangerous substances. For information on the types in question please contact your nearest Infineon Technologies office.

Except as otherwise explicitly approved by Infineon Technologies in a written document signed by authorized representatives of Infineon Technologies, Infineon Technologies' products may not be used in any applications where a failure of the product or any consequences of the use thereof can reasonably be expected to result in personal injury.