62.5W auxiliary power supply for three-phase power converter

Using the 1700 V CoolSiC™ MOSFET

About this document

Scope and purpose

This document demonstrates the solution for high input voltage DC link 62.5 W auxiliary power supply designs using Infineon's 1700 V CoolSiC™ MOSFET in TO-263 7 package (IMBF170R1K0M1) in a single-ended flyback topology. The reference board can support designers targeting three-phase converters that includes solar inverter, energy storage, EV-charger, UPS and motor drives.

Sales product name: REF_62W_FLY_1700V_SIC

Intended audience

Design engineers designing auxiliary power supply designs in three-phase converters and with Infineon CoolSiC™ MOSFET.

Important Notice

Environmental conditions have been considered in the design of the Evaluation and Reference Boards provided by Infineon Technologies. The design of the Evaluation and Reference Boards is tested by Infineon Technologies only as described in this document. The design is not qualified in terms of safety requirements, manufacturing and operation over the entire operating temperature range or lifetime.

The Evaluation and Reference Boards provided by Infineon Technologies are **subject to functional testing only under typical load conditions**. Evaluation and Reference Boards are not subject to the same procedures as regular products regarding returned material analysis (RMA), process change notification (PCN) and product discontinuation (PD).

Evaluation and Reference Boards are not commercialized products and are **solely intended to be used for evaluation and testing purposes**. They shall not be used for reliability testing or production. Hence, the Evaluation and Reference Boards may not comply with CE or similar standards (including but not limited to the EMC Directive 2004/EC/108 and the EMC Act) and may not fulfill other requirements of the country in which they are operated by the Customer. The Customer shall ensure that each Evaluation and/or Reference Board will be handled in a way which is compliant with all relevant requirements and standards in the country in which they are operated.

The Evaluation and Reference Boards are addressed **only to qualified and skilled technical staff, for laboratory usage,** and shall be used and managed according to the terms and conditions set forth in this document and in any other related documentation provided with the respective Evaluation or Reference Board.

It is the responsibility of the Customer's technical staff to evaluate the suitability of the Evaluation and Reference Boards for the intended application and the completeness of the Evaluation and Reference Board information provided in this document with respect to such application. The Customer accepts that the Evaluation and

Reference Boards are not intended to be used for life-endangering applications such as medical, nuclear, military, life-critical or other applications, where failure of the Evaluation and Reference Boards or any results from the use thereof can reasonably be expected to result in personal injury.

Evaluation and Reference Boards are provided "AS IS". Infineon Technologies disclaims any and all warranties, express or implied, including but not limited to warranties of non-compliance with any specification, non-infringement of third party rights and implied warranties of fitness for any purpose, or for merchantability.

Infineon Technologies shall not be responsible for any damages resulting from the use of the Evaluation and Reference Boards. Customer is obliged to defend, indemnify and hold Infineon Technologies harmless from and against any claims or damages arising out of or resulting from any use of the Evaluation and Reference Boards.

Table of Contents

About this document **1**
Important Notice **1**
Table of Contents **2**
1 Safety precautions **3**
2 Introduction **4**
3 Board overview **5**
3.1 Board features 5
3.2 1700 V CoolSiC™ MOSFET overview 5
3.3 External gate resistor selection guide 6
4 Reference board specifications and descriptions **8**
4.1 Board pictures 8
4.2 The technical specification of board 9
4.3 Schematic 10
4.4 PCB layout 11
4.5 Bill of material 13
4.6 Transformer construction 15
5 Test results **17**
5.1 Efficiency result 17
5.2 Waveforms 18
5.3 Thermal performance 19
6 References **22**
Revision History **22**

1 Safety precautions

Table 1 Safety Precautions

	Warning: The DC link potential of this board is up to 1000V_{DC}. When measuring voltage waveforms by oscilloscope, high voltage differential probes must be used. Failure to do so may result in personal injury or death.
	Caution: Only personnel familiar with the drive, power electronics and associated machinery should plan, install, commission and subsequently service the system. Failure to comply may result in personal injury and/or equipment damage.
	Warning: The evaluation or reference board contains DC bus capacitors which take time to discharge after removal of the main supply. Before working on the drive system, wait five minutes for capacitors to discharge to safe voltage levels. Failure to do so may result in personal injury or death. Darkened display LEDs are not an indication that capacitors have discharged to safe voltage levels.
	Warning: The evaluation or reference board is connected to the grid input during testing. Hence, high-voltage differential probes must be used when measuring voltage waveforms by oscilloscope. Failure to do so may result in personal injury or death. Darkened display LEDs are not an indication that capacitors have discharged to safe voltage levels.
	Caution: The heat sink and IGBT module surfaces of the evaluation or reference board may become hot during testing. Hence, necessary precautions are required while handling the board. Failure to comply may cause injury.
	Caution: The evaluation or reference board contains parts and assemblies sensitive to electrostatic discharge (ESD). Electrostatic control precautions are required when installing, testing, servicing or repairing the assembly. Component damage may result if ESD control procedures are not followed. If you are not familiar with electrostatic control procedures, refer to the applicable ESD protection handbooks and guidelines.
	Warning: Remove or disconnect power from the drive before you disconnect or reconnect wires, or perform maintenance work. Wait five minutes after removing power to discharge the bus capacitors. Do not attempt to service the drive until the bus capacitors have discharged to zero. Failure to do so may result in personal injury or death.
	Caution: A drive that is incorrectly applied or installed can lead to component damage or reduction in product lifetime. Wiring or application errors such as undersizing the motor, supplying an incorrect or inadequate AC supply, or excessive ambient temperatures may result in system malfunction.
	Caution: The evaluation or reference board is shipped with packing materials that need to be removed prior to installation. Failure to remove all packing materials that are unnecessary for system installation may result in overheating or abnormal operating conditions.

2 Introduction

The reference board "REF_62W_FLY_1700V_SiC" was developed to support customers designing auxiliary power supplies for three-phase converters using the 1700 V CoolSiC™ MOSFET in a single-ended flyback topology.

The board has three outputs of +15 V, -15 V and +24 V with up to 62.5 W output power working in a wide input voltage range from 200 V_{DC} to 1000 V_{DC}. Its potential applications are three-phase systems having a high input voltage DC link.

This application note contains an overview of the reference board's operation, product information and technical details with measurement results. The board uses 1700 V CoolSiC™ MOSFET in a TO-263 7L surface-mounted device (SMD) package as the main switch, which is well suited for high input voltage DC link, with single-ended flyback topology. With low $R_{DS(on)}$, high efficiency and low device temperature rising can be achieved with this board.

The controller works in quasi-resonant mode to help reduce EMI noise. This information's can help customers during their design-in phase, and for re-use of the reference design board for their own specific requirements.

Figure 1 Picture of board

3 Board overview

3.1 Board features

Key features of the reference board include:

- Adjustable output over voltage protection
- Overload/open loop protection
- Current limit protection
- Auto restart for over temperature protection
- VCC overvoltage and under voltage protection
- Shorted winding protection

The reference board uses the UCC28600 quasi-resonant flyback green-mode controller from Texas Instruments. The controller operates in different operating modes depending upon the line and load conditions. The converter is controlled using bursts of 40 kHz pulses at light load conditions and transitions to frequency fold-back mode (FFM) up to 30% full rated power. At loads greater than 30% full rated power, it operates either in quasi-resonant mode (QRM) or discontinuous conduction mode (DCM) clamped at a maximum switching frequency of 130 kHz.

3.2 1700 V CoolSiC™ MOSFET overview

The 1700 V CoolSiC™ MOSFET from Infineon is an excellent choice for high input voltage DC link systems like those found in auxiliary power supplies for three-phase converters. The TO-263 7L surface-mounted device (SMD) package is an optimized package for up to 1700 V high voltage power device. There is a creepage distance of about 7mm wide between drain and source, so safety standards are easily met. The separate driver source pin is helpful in reducing parasitic inductance of the gate loop to avoid gate ringing effect.

This application note will demonstrate how to simplify the current auxiliary power supply designs by developing a single-ended flyback reference design board using Infineon's 1700 V CoolSiC™ MOSFET. For low power DC/DC converters below 300 W, a flyback is the most common topology due to its simple design. However, the flyback topology requires a high-blocking voltage-switching device. Currently, silicon MOSFETs only have a blocking voltage of up to 1500 V that leaves low design margins, which affects the reliability of the power supply at a given input voltage DC link of 1000 V_{DC}. Moreover, most 1500 V silicon MOSFETs have very large on-state resistance ($R_{DS(on)}$), which will lead to higher losses, and thus lower system efficiency.

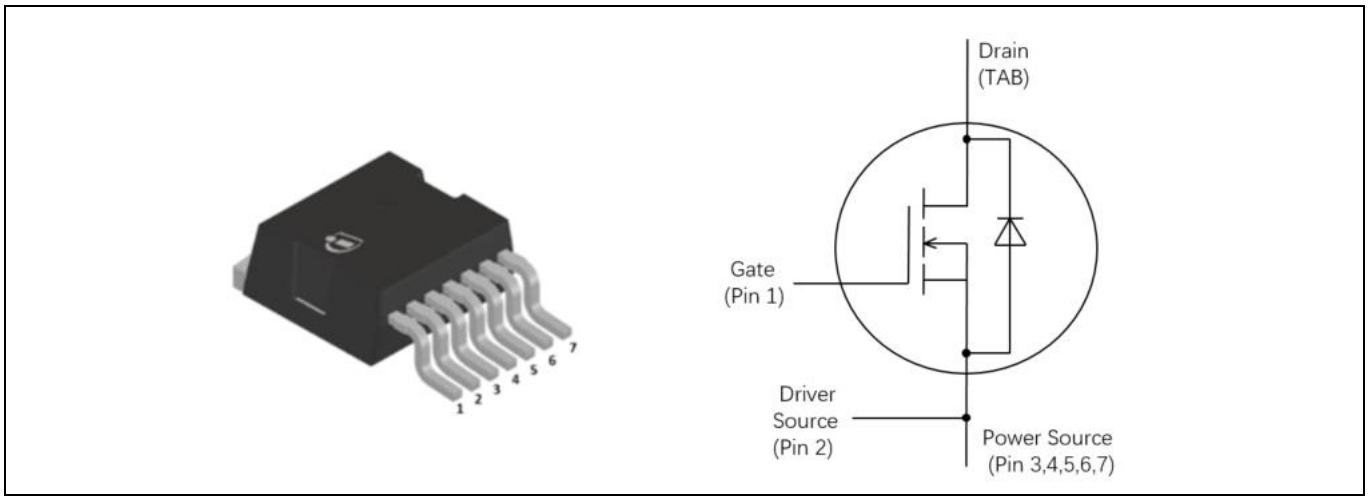

Figure 2 1700 V CoolSiC™ MOSFET IMBF170R1K0M1

The UCC28600 gate drive output stage has a 1-A sink (TrueDrive™) and 0.75-A source capability, and is clamped to 13 V internally, so the SiC MOSFET can be driven directly, which simplifies the driver circuit design.

3.3 External gate resistor selection guide

An optimum gate resistor is key for a high-performance design; generally, the value of an optimized gate resistor will be somewhere between the values indicated in the MOSFET data sheet and roughly twice this value.

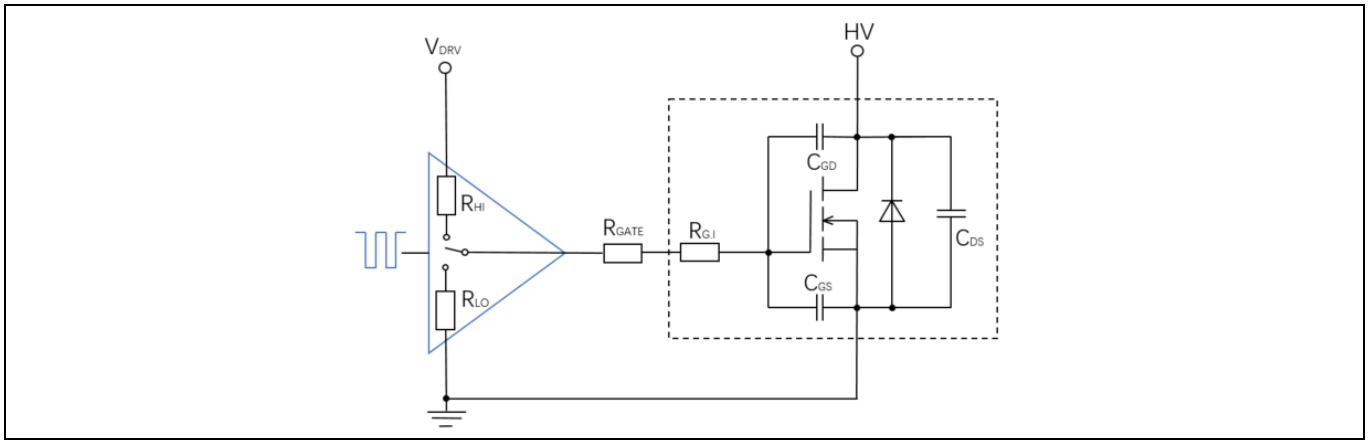

Figure 3 Gate drive elements

The gate resistor R_{GATE} limits the current, charging and discharging of the gate. this will influence the switching speed of the power device. Besides this, there are also several other influences from the gate resistor for:

- Limiting peak gate current to protect the driver output stage
- Dissipating power in the gate loop
- Electromagnetic interference
- Preventing gate ringing
- Avoiding parasitic turn-on by carefully selecting gate resistance

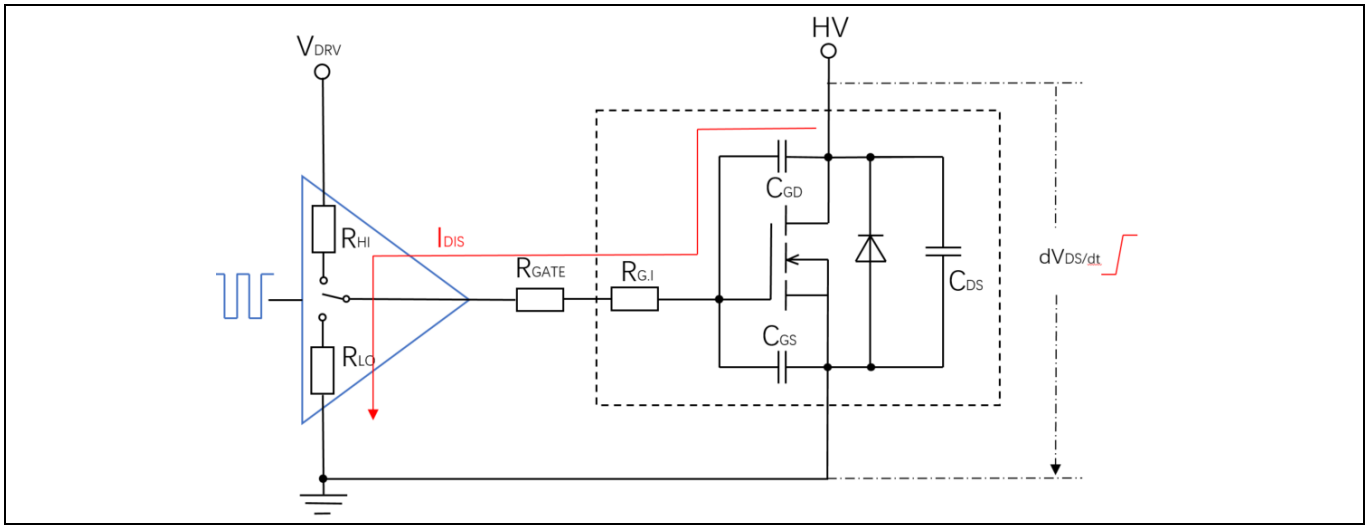

Figure 4 Parasitic turn on

As we know, use of a larger gate resistance value could be a workaround, which would not only increase the damping effect and suppress the ringing effect, but also limit peak gate current, and suppress electromagnetic interference. However, designers should be aware that, increasing gate resistance will decrease converter efficiency and lead higher temperature rising of MOSFET, so, designers should get balance on all sides.

As sketched in Figure 4, high dV_{DS}/dt across the MOSFET will generate a displacement current I_{DIS} through the Miller capacitor C_{GD} , and this displacement current will generate a voltage drop across the gate resistor raising up the gate voltage. This can be calculated according to equations (1) and (2) below.

$$I_{DIS}=C_{GD}\times\frac{dV_{CE}}{dt} \quad (1)$$

$$V_{DIS}=I_{DIS}\times(R_G+R_{G.I}+R_{LO}) \quad (2)$$

If this voltage is up to MOSFET turn on threshold voltage, parasitic turn on occurs. This will influence the efficiency and safety of the converter, if in a bridge system, a bridge shoot-through appears.

In addition, considering signal integrity, gate resistance value that is too high will decouple the gate signal, which comes from the output stage of the driver; this will lead to longer delay times or even operation failure. Therefore, the value of the gate resistor should be chosen carefully.

Besides the value choosing, the layout of the gate resistor is also important. If it is physically possible, the gate resistor should be put as close as possible to the gate of the MOSFET.

4 Reference board specifications and descriptions

This section contains information about the reference board including the flyback transformer construction.

4.1 Board pictures

Figure 5 and Figure 6 show the top and bottom side of the reference board. The board has a size of 60mm x 100m x 25mm.

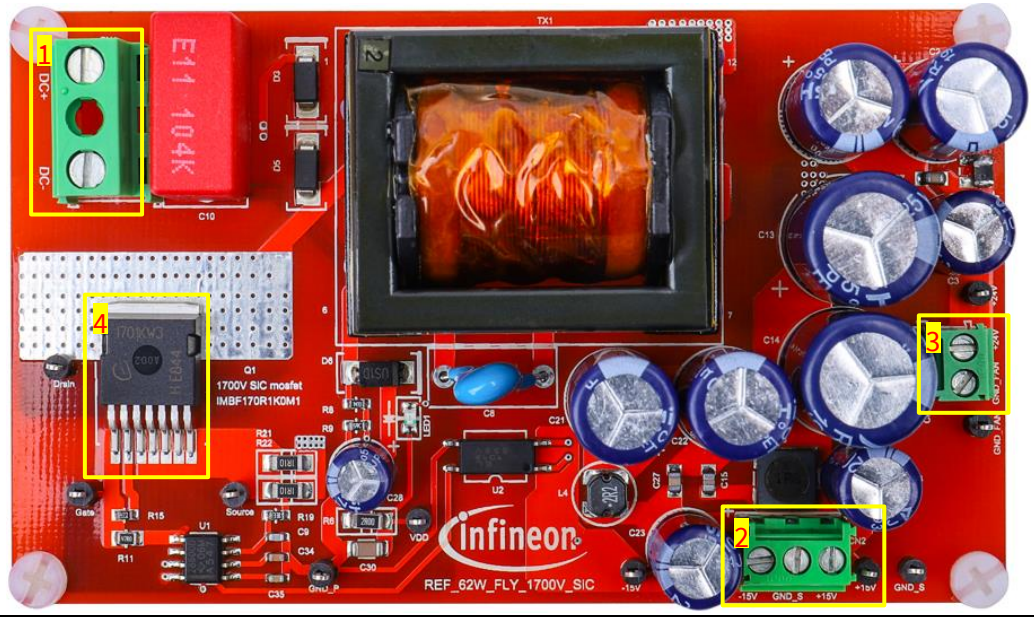

1- Input voltage V_{DC} connector CN1

2- Output voltage +/-15V connector CN2

3- Output voltage +24V connector CN3

4- 1700V SiC MOSFET IMBF170R1K0 M1

Figure 5 Top side of the reference board.

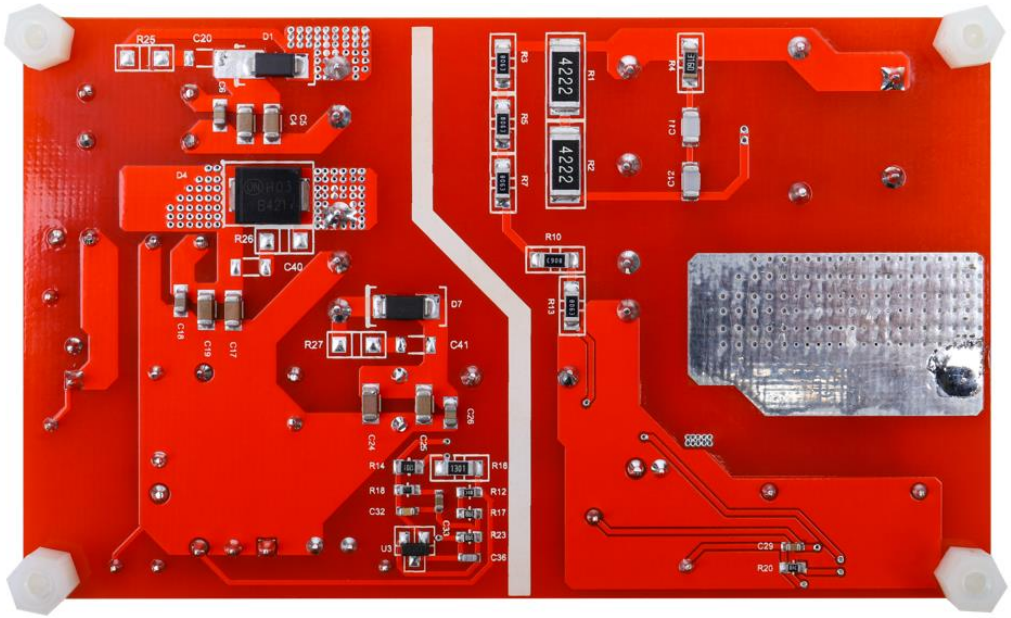

Figure 6 Bottom side of the reference board.

4.2 The technical specification of board

The reference board is intended to support customers designing an auxiliary power supply for three-phase converters using the Infineon 1700 V CoolSiC™ MOSFET. Potential applications includes solar inverters, energy storage, EV-chargers, UPS and motor drives. Table 2 lists the key board specifications.

Table 2 Technical specification

Input voltage	200 V_{DC} to 1000 V_{DC}		
Output power	62.5 W		
Topology	Single-ended flyback		
Output voltage	+24 V	+15 V	-15 V
Tolerance	5%	2%	2%
Output current	1 A	2 A	0.5 A
Frequency	80 kHz, QR mode		
Derating of switches V_{DS}	85% (1450 V)		
Efficiency at full load	>85%		

4.3 Schematic

Figure 7 shows the schematic of the single-ended flyback converter for this reference board.

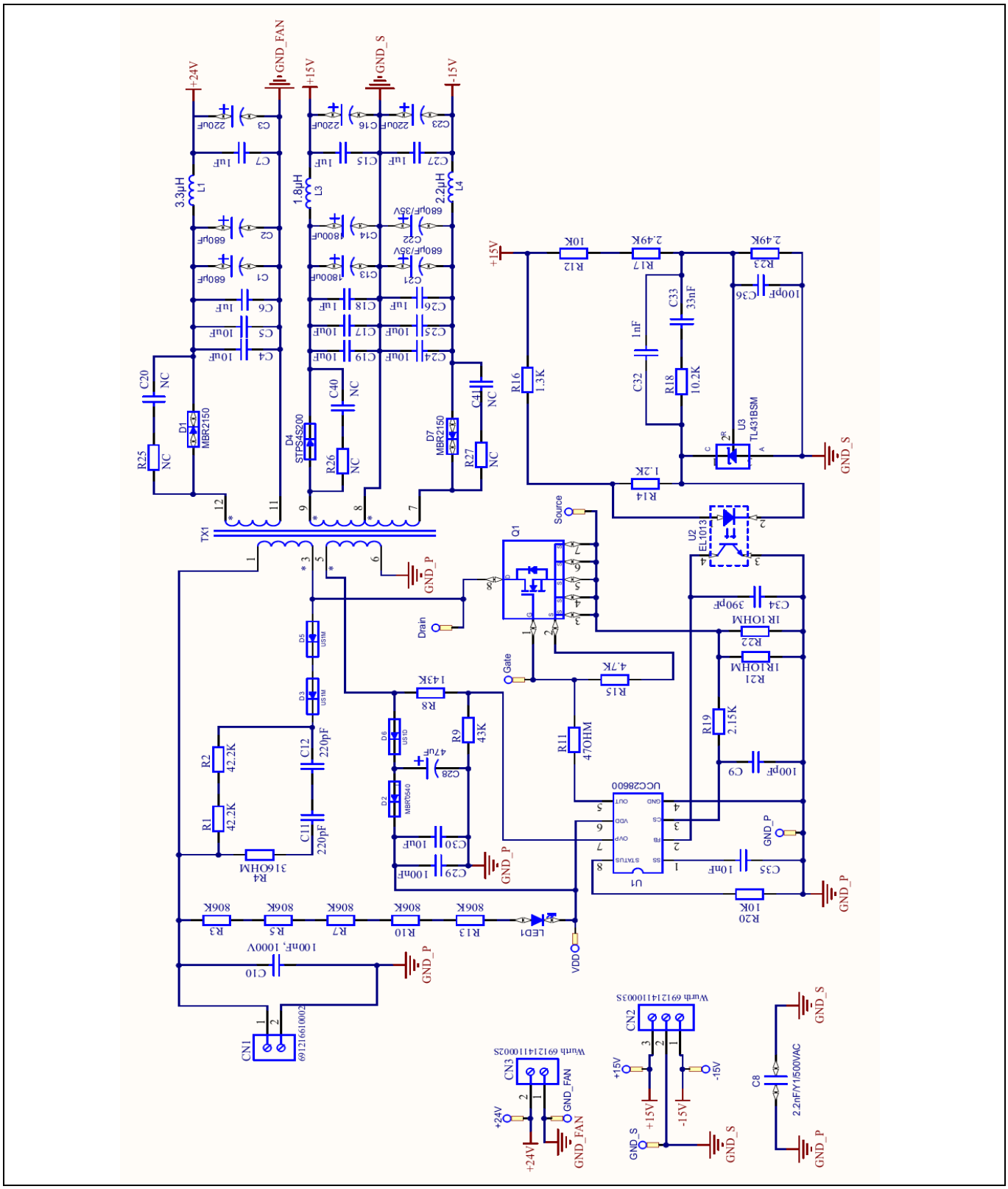

Figure 7 Schematic of the reference board.

4.4 PCB layout

The following pictures show the PCB layout and the component assembly marked with its respective designators.

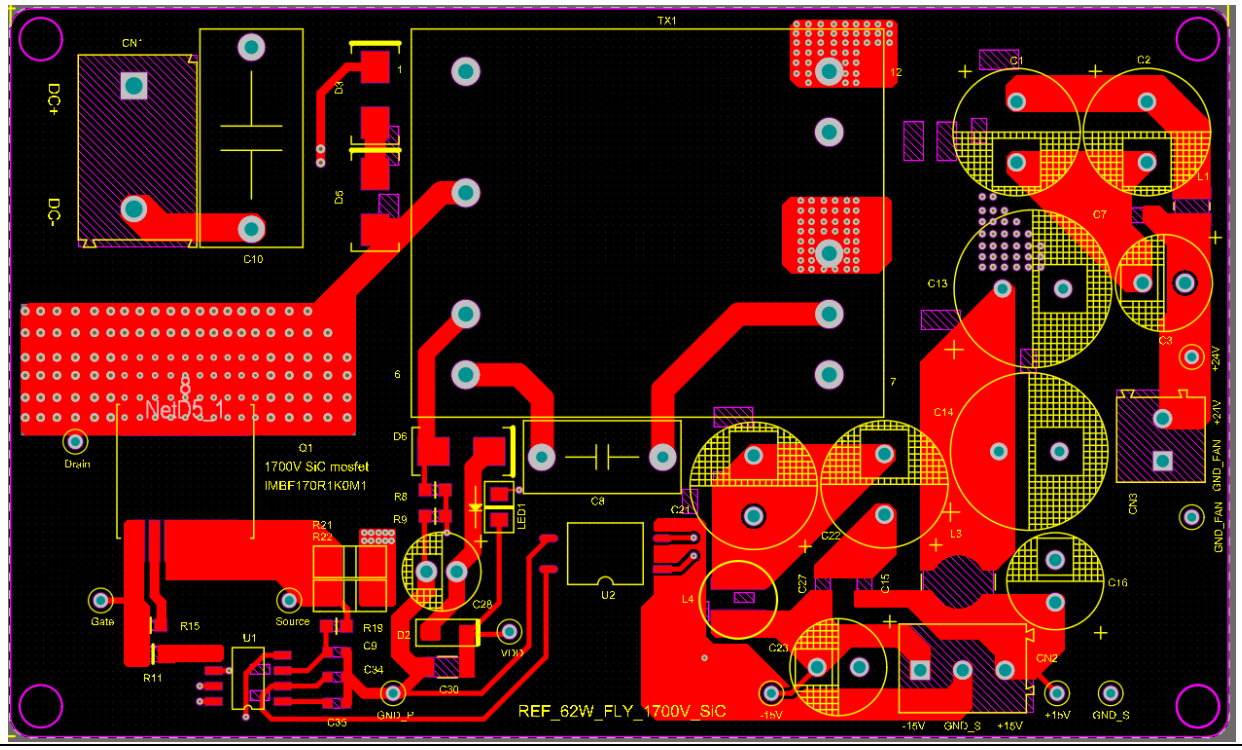

Figure 8 PCB top layer

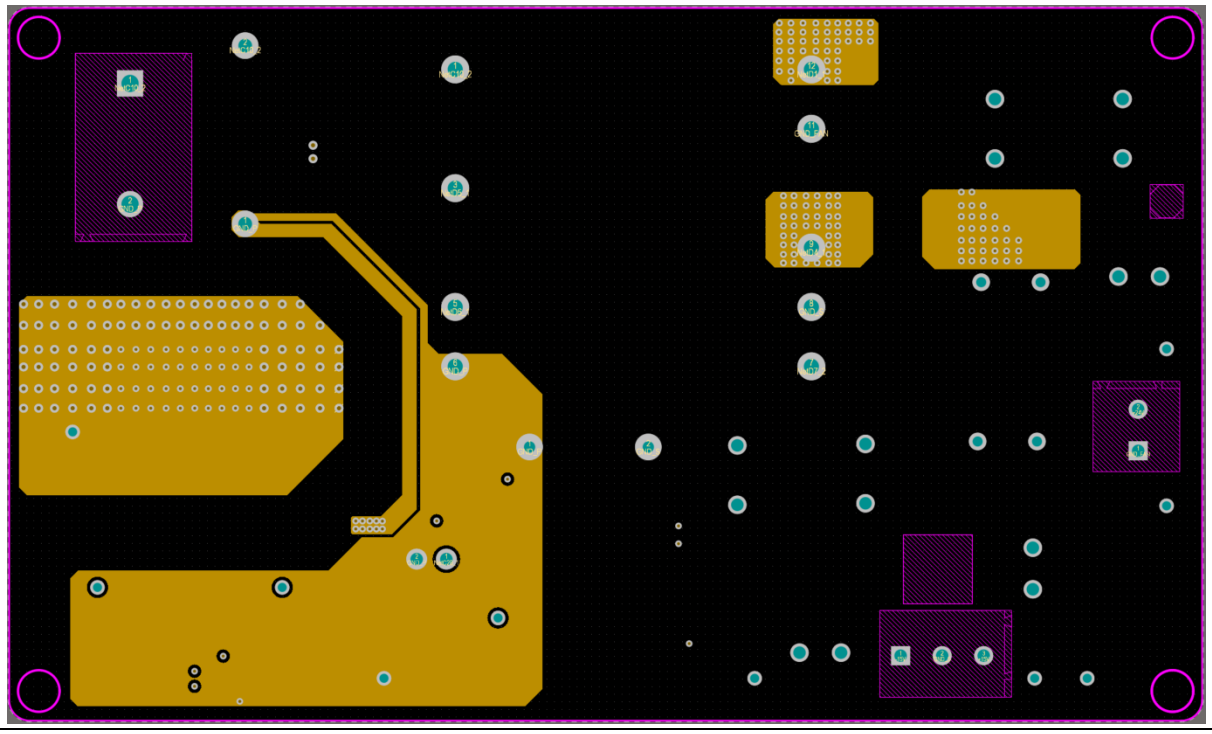

Figure 9 PCB middle 1 layer

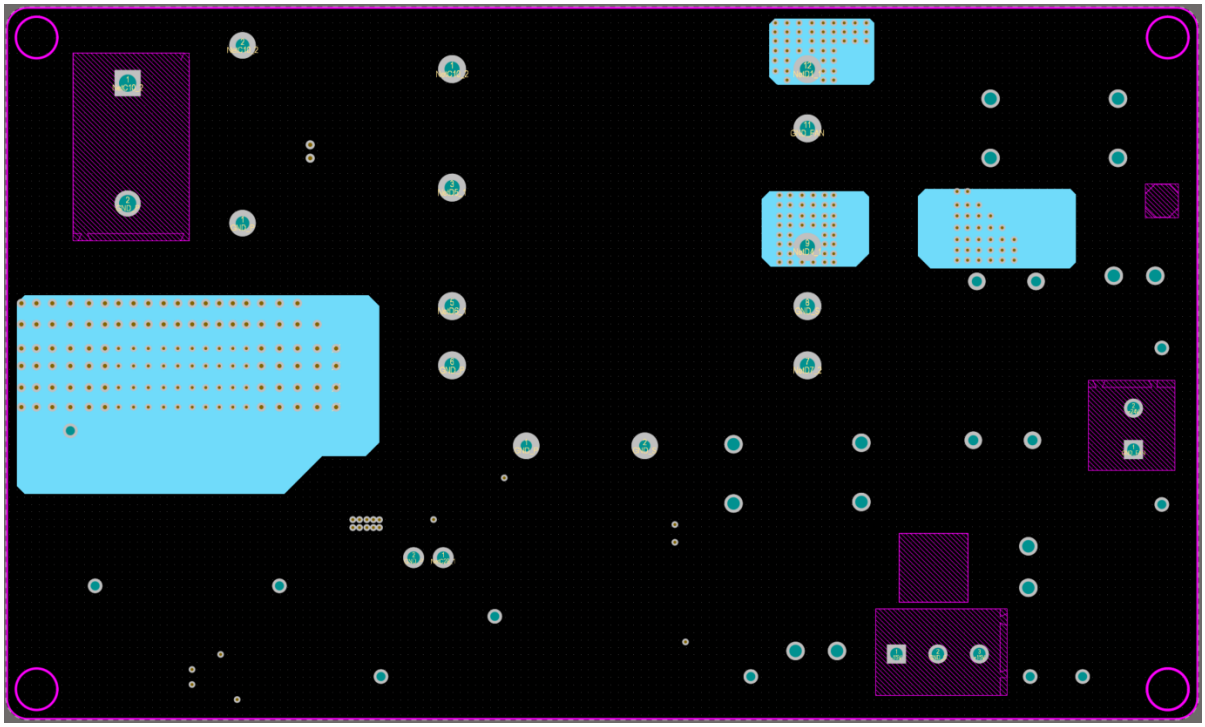

Figure 10 PCB middle 2 layer

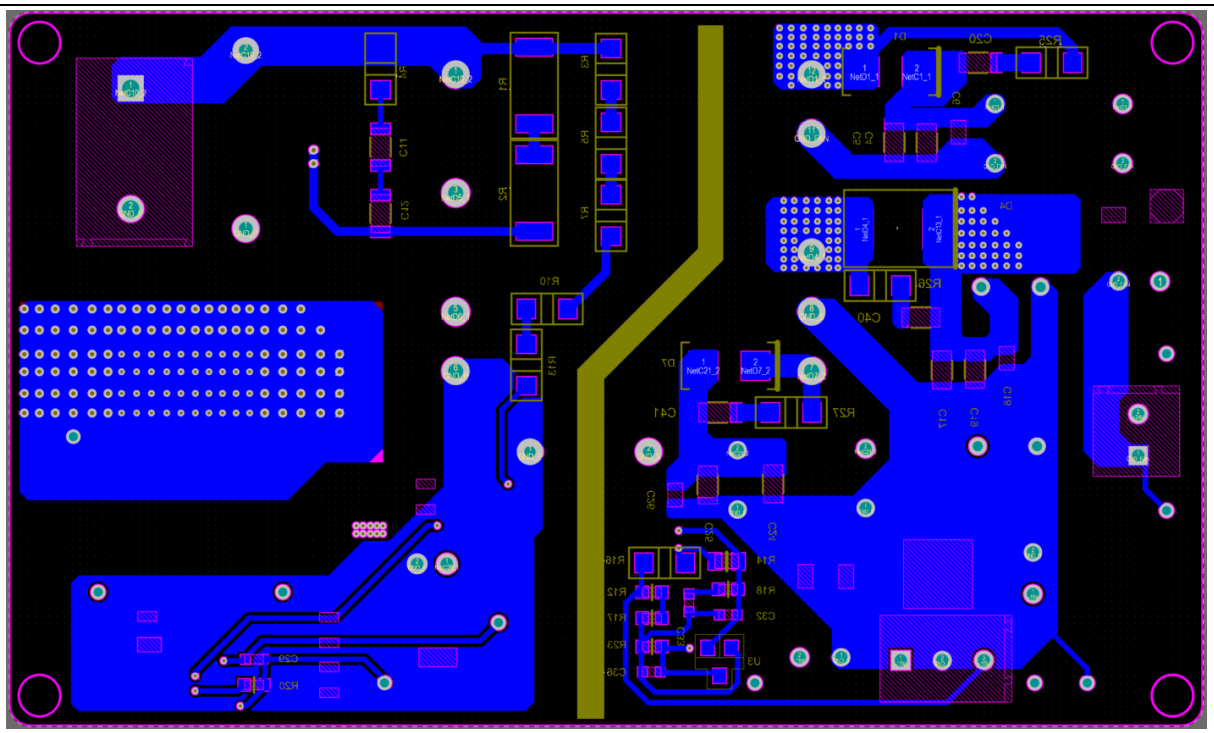

Figure 11 PCB bottom layer

4.5 Bill of material

The BOM lists all components used for the PCB.

Table 3 Bill of material

Designator	Description	Part number	Manufacturer	Quantity
-15V, +15V, +24V, VDD, GND_FAN, GND_P, GND_S, Gate, Drain, Source	TEST POINT PC MINI .040"D WHITE	5002	KEYSTONE ELECTRONICS	10
C1, C2, C21, C22	Electrolytic capacitor, 680uF, 20%, 35V	ERJ1VM681G25OT	Aishi	4
C3, C16, C23	Electrolytic capacitor, 220uF, 20%, 35V	ERJ1VM221F16OT	Aishi	3
C4, C5, C17, C19, C24, C25, C30	Ceramic capacitor, 10uF, X7R, 50V, CAP1206	C3216X7R1HK160A	TDK	7
C6, C7, C15, C18, C26, C27	Ceramic capacitor, 1uF, X7R, 50V, CAP0805	885012207103	Wurth	6
C8	Y1 capacitor, 2.2nF, 500VAC,	DE1E3RB222MN4AR01F	Murata	1
C9,C36	Ceramic capacitor, 100pF, X7R, 25V, CAP0603	885012206053	Wurth	2
C10	Film Capacitor,100nF/1000V	890493425009CS	Wurth	1
C11, C12	Ceramic capacitor, 220pF, X7R, 1kV, CAP1206	CC1206KKX7RCBB221	Yageo	2
C13, C14	Electrolytic capacitor, 1800uF, 20%, 25V	ERJ1EM182W25OT	Aishi	2
C20, C40, C41	NC			3
C28	Electrolytic capacitor, 47uF, 20%, 35V	ERJ1VM470E09OT	Aishi	1
C29	Ceramic capacitor, 100nF, X7R, 50V, CAP0603	885012206095	Wurth	1
C32	Ceramic capacitor, 1nF, X7R, 25V, CAP0603	885012206059	Wurth	1
C33	Ceramic capacitor, 33nF, X7R, 25V, CAP0603	885012206068	Wurth	1
C34	Ceramic capacitor, 390pF, X7R, 25V, CAP0603	C0603C391K3RACTU	Kemet	1
C35	Ceramic capacitor, 10nF, X7R, 25V, CAP0603	885012206065	Wurth	1
CN1	Horizontal entry with rising cage clamp WR-TBL, 2 pin	691216610002	Wurth	1
CN2	Horizontal entry modular with rising cage clamp WR-TBL, 3 pin	691214110003S	Wurth	1

CN3	Horizontal entry modular with rising cage clamp WR-TBL, 2 pin	691214110002S	Wurth	1
D1, D7	High voltage power Schottky rectifier	MBR2150	Diodes	2
D2	Schottky rectifier	MBR0540	ONsemi	1
D3, D5	1.0A surface mount ultra-fast rectifier	US1M	Diodes	2
D4	Power Schottky rectifier	STPS4S200	ST	1
D6	1.0A surface mount ultra-fast rectifier	US1D	Diodes	1
L1	WE-TPC SMT Tiny Power Inductor	744025003	Wurth	1
L3	WE-TPC SMT Tiny Power Inductor	7440520018	Wurth	1
L4	WE-PD2 SMD Power Inductor	744773022	Wurth	1
LED1	LED RED CLEAR 0805 SMD	150080RS75000	Wurth	1
Q1	1700V SiC MOSFET	IMBF170R1K0M1	Infineon	1
R1, R2	Resistor, 42.2k, 1%, RES2512	RC2512FR-0742K2L	Yageo	2
R3, R5, R7, R10, R13	Resistor, 806K, 1%, RES1206	RC1206FR-07806KL	Yageo	5
R4	Resistor, 316R, 1%, RES1206	RC1206FR-07316RL	Yageo	1
R8	Resistor, 143k, 1%, RES0603	RC1206FR-07143KL	Yageo	1
R9	Resistor, 43k, 1%, RES0603	RC1206FR-0743KL	Yageo	1
R11	Resistor, 47R, 1%, RES0805	RC1206FR-0747RL	Yageo	1
R12, R20	Resistor, 10k, 1%, RES0603	RC1206FR-0710KL	Yageo	2
R14	Resistor, 1.2k, 1%, RES0805	RC1206FR-071K2L	Yageo	1
R15	Resistor, 4.7k, 1%, RES0603	RC1206FR-074K7L	Yageo	1
R16	Resistor, 1.3k, 1%, RES1206	RC1206FR-071K3L	Yageo	1
R17, R23	Resistor, 2.49k, 1%, RES0603	RC1206FR-072K49L	Yageo	2
R18	Resistor, 10.2k, 1%, RES0603	RC1206FR-0710K2L	Yageo	1
R19	Resistor, 2.15k, 1%, RES0603	RC1206FR-072K15L	Yageo	1
R21, R22	Resistor, 1R1, 1%, RES1206	RC1206FR-071R1L	Yageo	2
R25, R26, R27	NC			
TX1	flyback transformer	750344264-02	Wurth	1
U1	Quasi-resonant controller	UCC28600	TI	1
U2	Long creepage photocoupler	EL1013	Everlight	1
U3	Precision programmable reference	TL431BIDBZR	TI	1

4.6 Transformer construction

The flyback transformer was manufactured by Wurth. The following tables and figures shows key specifications and information.

Table 4 Transformer specification

Manufacturer and part number	Wurth 750344264-02
Core size	ER28/17/11
Core material	DMR95
Bobbin	12 pins ER28 vertical
Primary inductance	772 uH measured from pin 1 to pin3 @100 kHz
Leakage inductance	<10 µH measured from pin 1 to pin 3 with all other pins shorted @100kHz

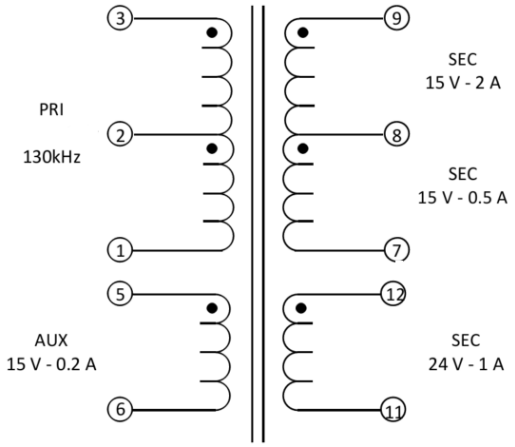

Figure 12 Electrical diagram of transformer

Table 5 Electrical specifications @25°C unless otherwise noted

Parameter	Pin	Test conditions	Value
DC resistance	3-1	@20°C	0.504 ohms max
	5-6	@20°C	0.040
	9-8	@20°C	0.005
	12-11	@20°C	0.019
	8-7	@20°C	0.027
Inductance	3-1	100 kHz, 100 mV, Ls	772µH±10%
Dielectric	3-1	tie(3+5,9+11), 3750 VAC, 1 second	3000 VAC, 1minute
Turns ratio	(3-1):(5-6)		15.25, ±2%
	(3-1):(9-8)		15.25, ±2%
	(3-1):(12-11)		10.17, ±2%
	(3-1):(8-7)		15.25, ±2%

Note: 100% of components are hi-pot tested to 3KVac primary to secondary for 1 minute.

Figures below depict the transformer setup and recommended land pattern.

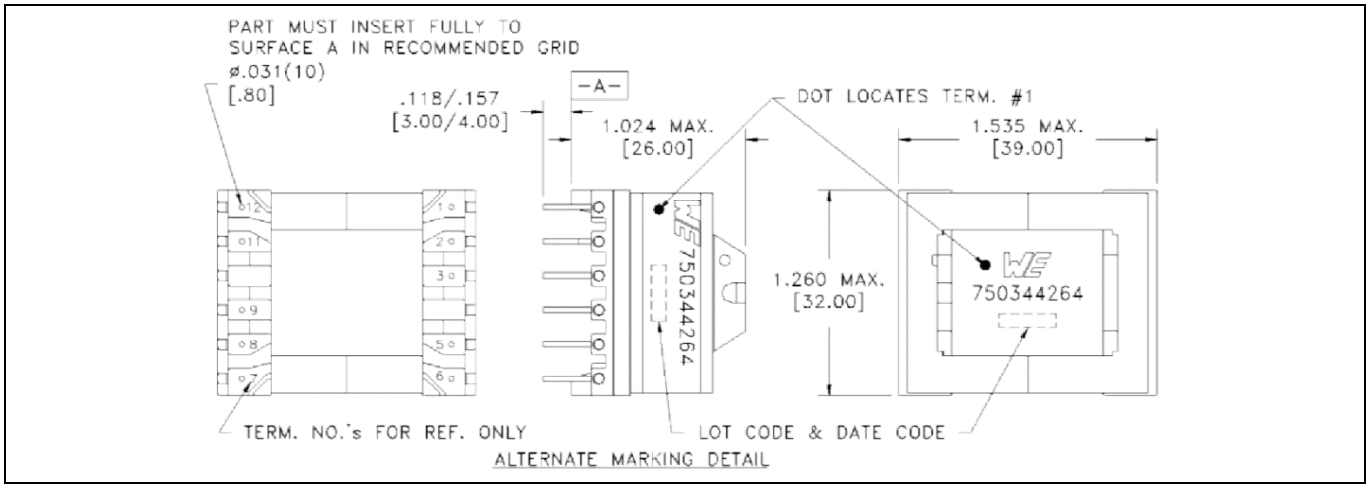

Figure 13 Transformer setup diagram. Dimensions in brackets are in mm.

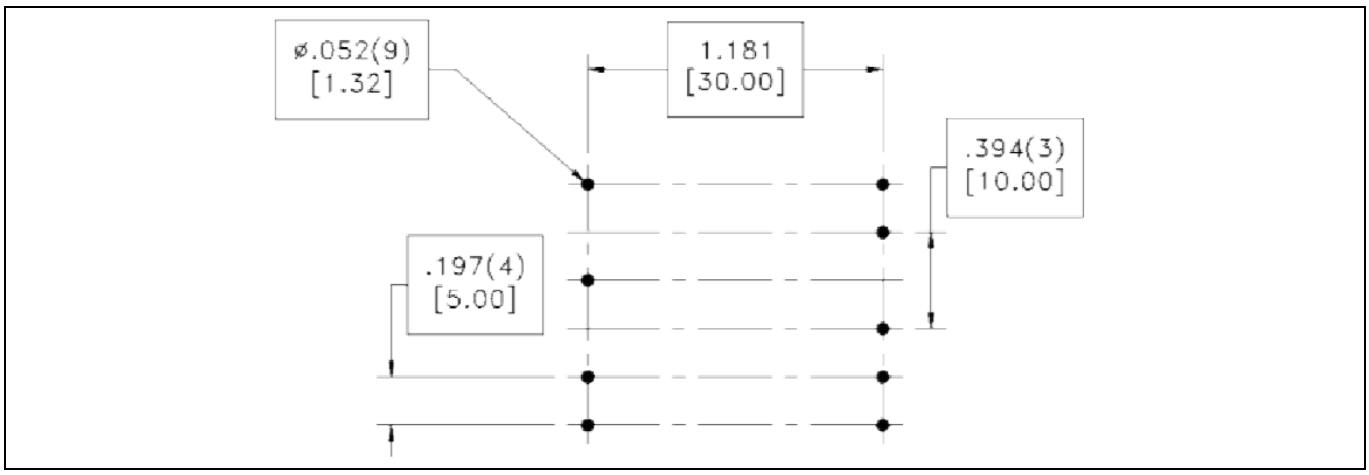

Figure 14 Transformer recommended land pattern. Dimensions in brackets are in mm.

5 Test results

To demonstrate the high performance of the reference board with 1700 V CoolSiC™ MOSFETs, efficiency was measured accompanied with the switch voltage waveforms and thermal performance of the board.

5.1 Efficiency result

Efficiency of the reference board was measured and test result is found in Figure 15, peak efficiency is 90.56% at a full load specification of 62.5 W with a gate resistor value of 47 Ω.

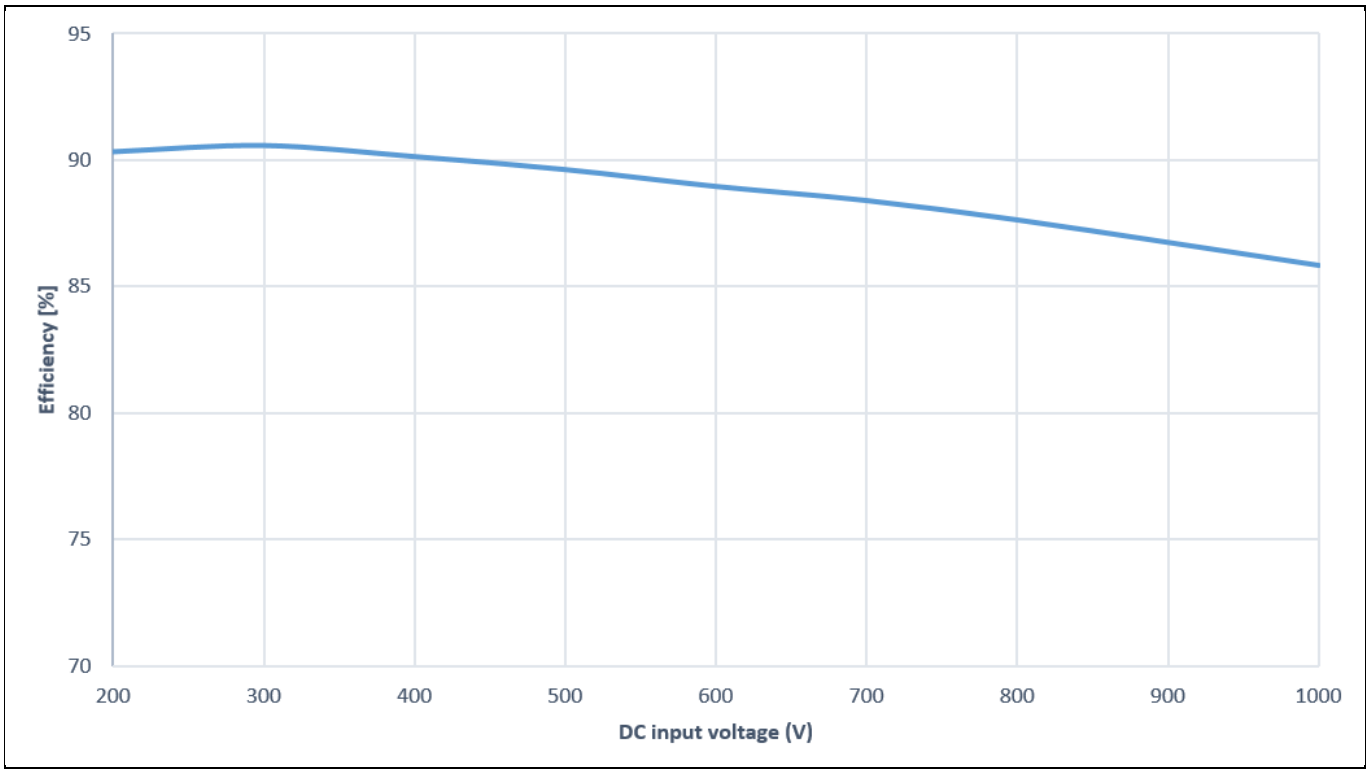

Figure 15 Measured efficiency versus DC input voltage. Test conditions: P_O = 62.5 W and R_G = 47 ohms.

5.2 Waveforms

The next three figures show the drain-source voltage (V_{DS}) and gate-source voltage (V_{GS}) waveforms of the 1700V CoolSiC™ MOSFET at different input voltage with full rated output load, and in these three waveforms, yellow one is gate voltage V_{GS}, purple one is drain-source voltage V_{DS}.

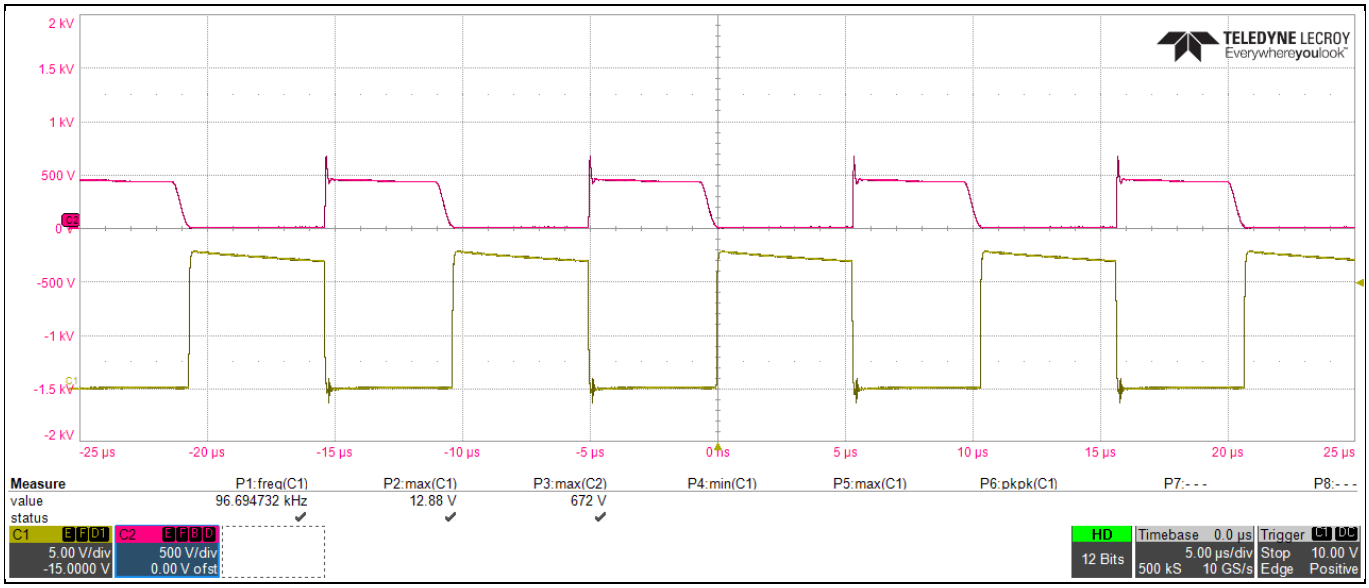

Figure 16 Drain source and gate voltage at input voltage of 200 V_{DC}

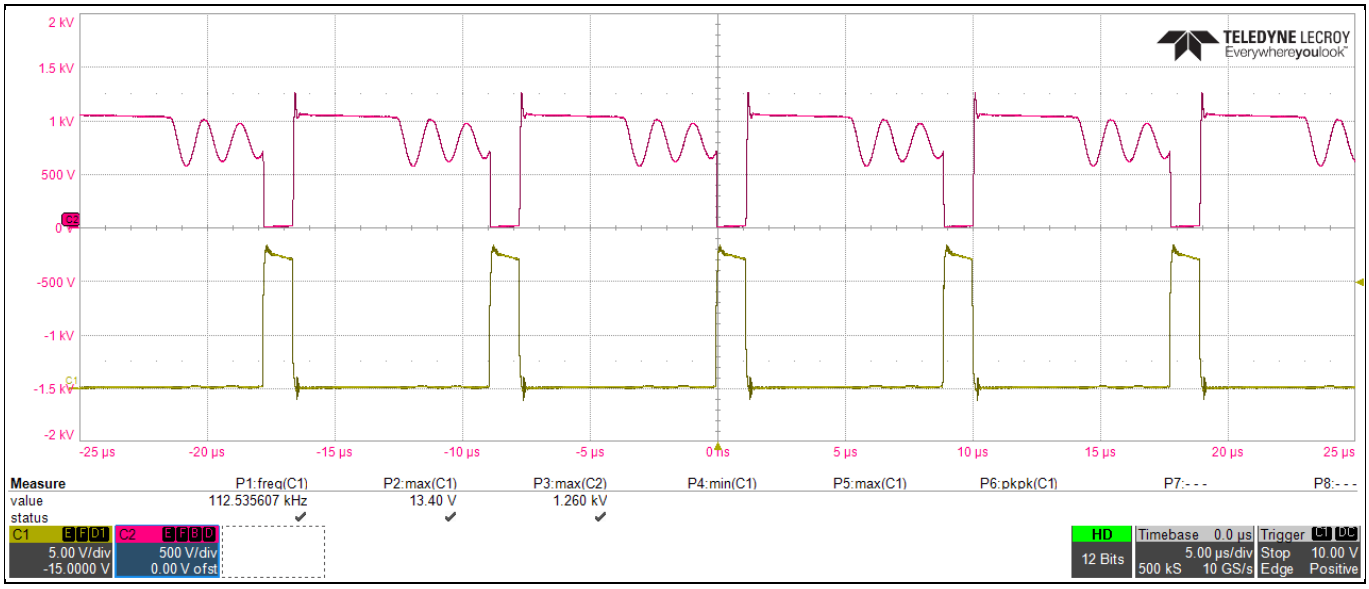

Figure 17 Drain source and gate voltage at input voltage of 800 V_{DC}

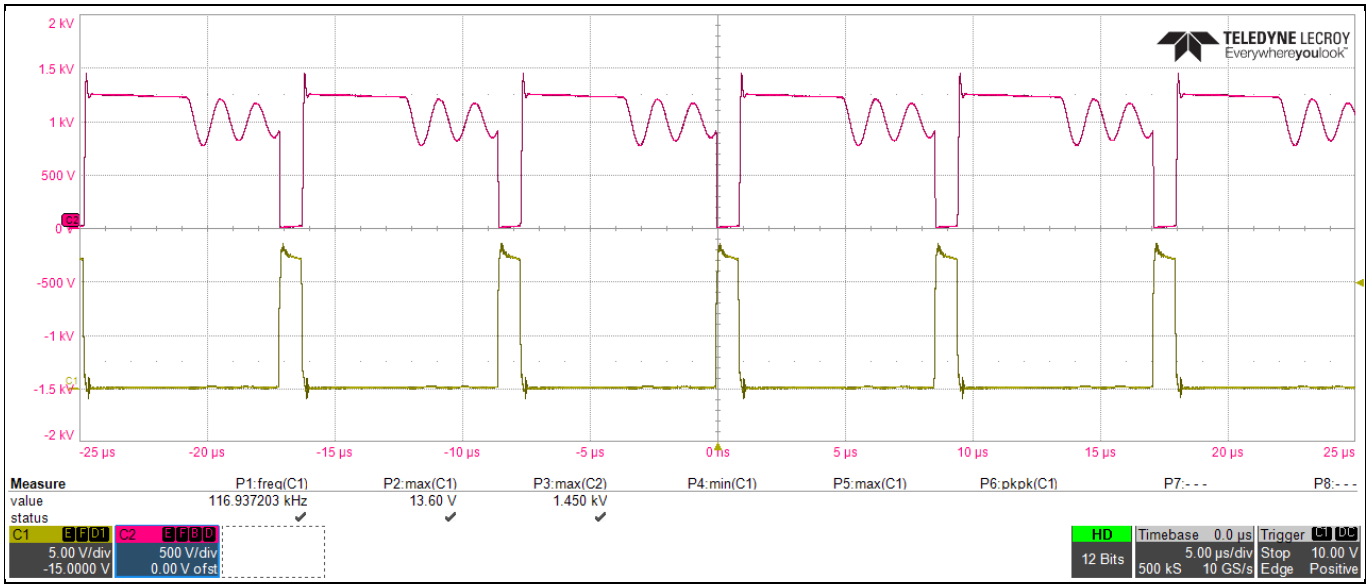

Figure 18 Drain source and gate voltage at input voltage of 1000 V_{DC}

5.3 Thermal performance

By the nature of the reflow soldering process, there will be a certain number of voids in the solder joint, especially on large-area pad, such as this TO263-7 package. One method to be considered when trying to reduce voids is dividing whole big pad to small separated segments, segmentation of the stencil for exposed pads or other big pads is shown in the following sketch, Figure 19.
With thermal through-holes (vias) and additional copper areas for heat spreading in inner layers of the PCB, an improved thermal path from component to ambient is ready, and MOSFET will have an excellent thermal performance without heatsink.

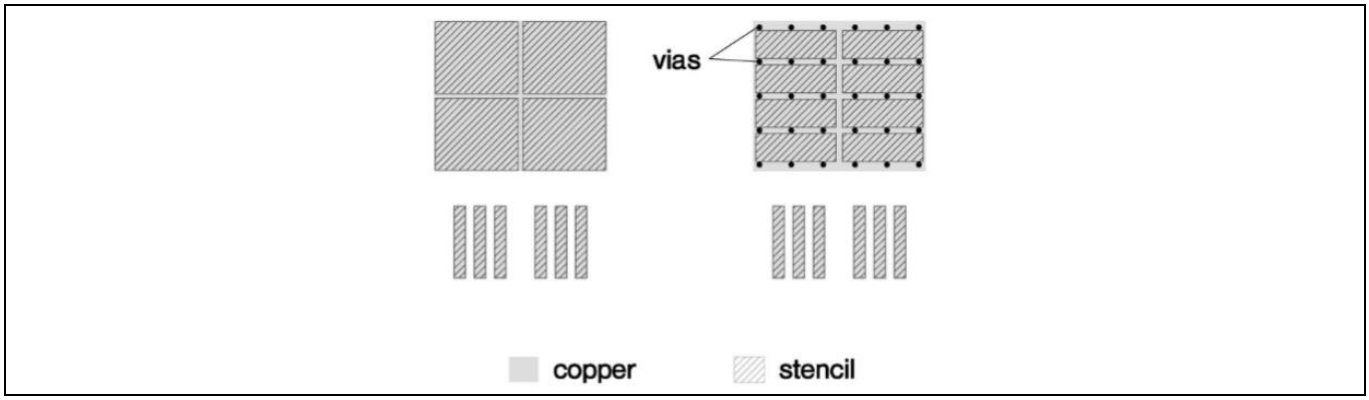

Figure 19 Example of a stencil design for a PG-TO263-7 package with and without vias in pad.

The next three thermal images depict the thermal performance of the 1700 V CoolSiC™ MOSFET at different input voltage with full rated output load and natural cooling at 25℃.

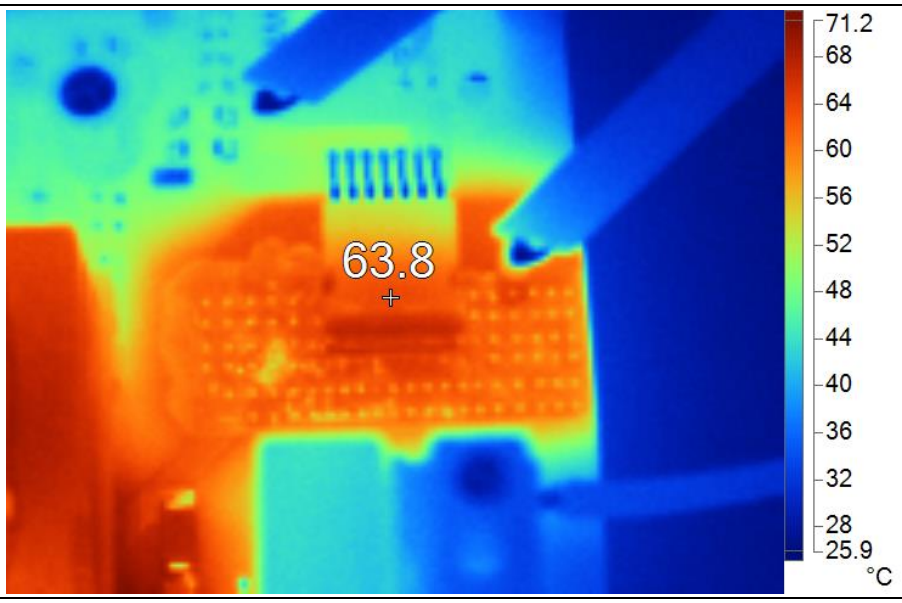

Figure 20 Thermal image at 600 V_{DC} with full load

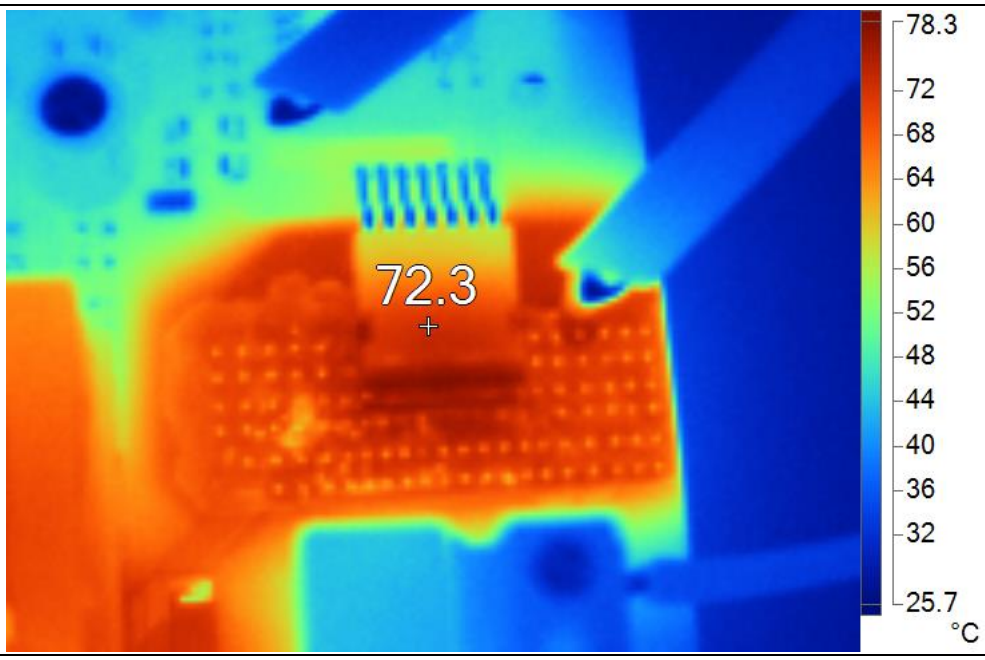

Figure 21 Thermal image at 700 V_{DC} with full load

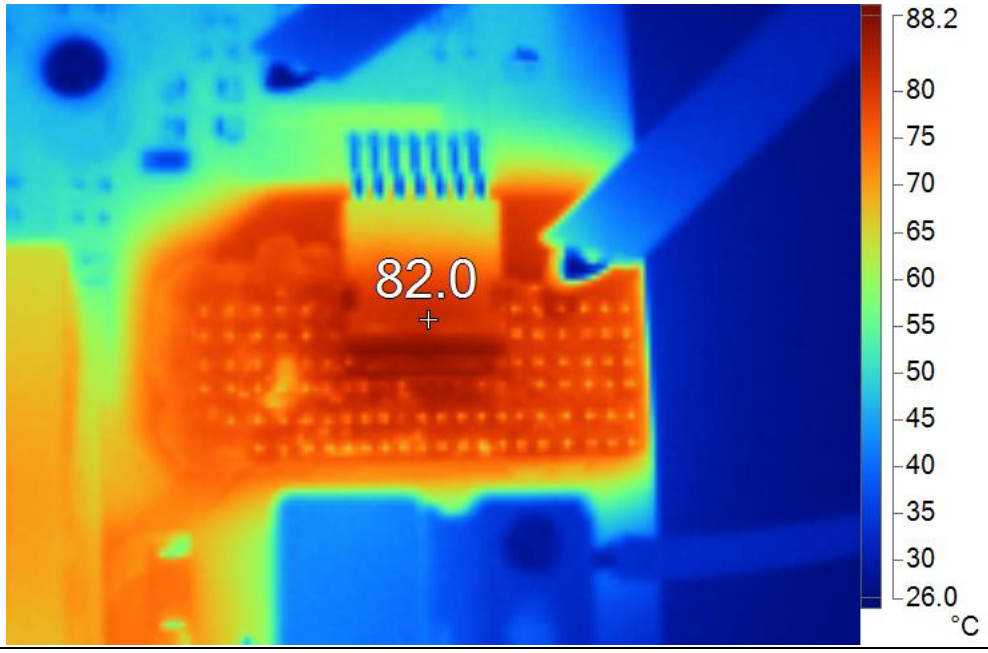

Figure 22 Thermal image at 800 V_{DC} with full load

6 References

[1] IMBF170R1K0M1 datasheet, 1700 V CoolSiC™ MOSFET

[2] UCC28600 datasheet, 8-Pin Quasi-Resonant flyback Green-Mode Controller

[3] Gate resistor for power devices, Infineon Technologies, application note AN2015-06

[4] 62 W Auxiliary power supply for three-phase power converters using Infineon 1700 V silicon carbide MOSFET, PCIM Europe 2020

Attention: Infineon´s Product Registration is online now. Register your board and download more information

Three easy steps to register:

1. *Go to www.Infineon.com/ login to my Infineon*
2. *Click on "Product Registration"*
3. *Choose your board and enter board series number, download the related information package*

Revision History

Page or reference	Revision Date	Description of change
1.0	2020-03-12	Initial version

Trademarks
All referenced product or service names and trademarks are the property of their respective owners.

Edition 2020-03-12

Published by

Infineon Technologies AG

81726 Munich, Germany

© 2020 Infineon Technologies AG.
All Rights Reserved.

Do you have a question about this document?

Email: erratum@infineon.com

Document reference

AN2020-39

For further information on the product, technology, delivery terms and conditions and prices please contact your nearest Infineon Technologies office (**www.infineon.com**).

WARNINGS

Due to technical requirements products may contain dangerous substances. For information on the types in question please contact your nearest Infineon Technologies office.

Except as otherwise explicitly approved by Infineon Technologies in a written document signed by authorized representatives of Infineon Technologies, Infineon Technologies' products may not be used in any applications where a failure of the product or any consequences of the use thereof can reasonably be expected to result in personal injury.