IM393 Application note

IM393 IPM Technical Description

About this document

Scope and purpose

The scope of this application note is to describe the IM393 product family and the basic requirements for operating the products in a recommended mode. This includes integrated components, such as IGBT, bootstrap functionality or gate drive IC, as well as the design of the necessary external circuitry, interfacing and application use.

Intended audience

Power electronics engineers who want to design reliable and efficient motor drive application with IM393 IPM family.

Table of contents

About this document **1**
Table of contents **1**
1 Introduction **3**
1.1 Product line-up 4
1.2 Nomenclature 5
2 Internal components and package technology **6**
2.1 Power transistor and diode technology 6
2.2 Control IC – Six-channel gate driver IC 6
2.3 Thermistor 7
2.4 Package technology 8
3 Product overview and pin description **9**
3.1 Internal circuit and features 9
3.2 Maximum electrical rating 10
3.3 Description of the input and output pins 10
3.4 Outline drawings 15
4 Interface circuit and layout guide **17**
4.1 Input/output signal connection 17
4.2 Input/output signal connection 19
4.3 Recommended circuit current of power supply 20
4.4 Recommended layout for over-current protection (OCP) and short-circuit protection (SCP) functions 21
4.5 Recommended wiring of shunt resistor and snubber capacitor 21
4.6 Pin and screw hole coordinates for IM393-XX footprint 23
5 Function and protection circuit **25**
5.1 Over-current protection 25
5.1.1 Timing chart of over-current protection (OCP) 25
5.1.2 Selecting current-sensing shunt resistor 26
5.1.3 Delay time 27

5.2 Fault output and auto-clear function 27
5.3 Undervoltage lockout (UVLO) 29
5.4 Over-temperature protection 31
6 Bootstrap circuit 33
6.1 Bootstrap circuit operation 33
6.2 Initial charge of bootstrap capacitor 34
6.3 Bootstrap capacitor selection 34
6.4 Charging and discharging of the bootstrap capacitor during PWM inverter operation 35
7 Thermal design 37
7.1 Introduction 37
7.2 Power losses 38
7.2.1 Conduction losses 38
7.2.2 Switching losses 39
7.3 Thermal impedance 39
7.4 Temperature rise considerations and calculation example 40
7.5 Heat sink selection guide 42
7.5.1 Required heat sink performance 42
7.5.2 Heat sink characteristics 43
7.5.2.1 Heat transfer from heat source to heat sink 43
7.5.2.2 Heat transfer within the heat sink 43
7.5.2.3 Heat transfer from heat sink surface to ambient 43
7.5.3 Selecting a heat sink 45
7.6 Online simulation tool 45
8 Heat sink mounting and handling guidelines 47
8.1 Heat sink mounting 47
8.1.1 General guidelines 47
8.1.1.1 Recommended tightening torque 47
8.1.1.2 Screw tightening to heat sink 48
8.2 Handling guideline 49
8.3 Storage guideline 50
8.3.1 Recommended storage conditions 50
9 References 51
Revision history 52

1 Introduction

With the global emphasis on energy efficiency, there are ever stricter requirements on the efficiency of motor drive circuits. CIPOS™ Integrated Power Modules (IPMs) are becoming more popular in the home appliance and industrial motor-drive applications, because of their higher efficiency, smaller size, easier assembly and shorter development time.

The next generation of CIPOS™ IPM from Infineon Technologies has been developed with a focus on improving module efficiency and long-term reliability. The combined benefits of advanced trench IGBT technology and optimized package design have enabled us to achieve higher efficiency and improved reliability, along with minimized module system costs. Integrating discrete power semiconductors and drivers into one package allows designers to reduce the time and effort spent on design. To meet the strong demand for small size and higher power density, Infineon has developed a new family of highly integrated intelligent power modules that contain nearly all of the semiconductor components required to drive electronically controlled variable-speed electric motors.

This advanced IPM is a combination of Infineon's newest low $V_{CE(ON)}$ trench IGBT technology optimized for the best trade-off between conduction and switching losses, and the industry benchmark three-phase high voltage, high-speed driver (3.3 V-compatible) in a fully isolated thermally enhanced package. A built-in high precision temperature monitor and over-current protection feature, along with the short-circuit rated IGBTs and integrated undervoltage lockout function, deliver a high level of protection and fail-safe operation. Using a dual or single in-line package with full transfer molded structure resolves the isolation problem to the heat sink.

The application note concerns the following products:

- IM393-S6E
- IM393-S6F
- IM393-M6E
- IM393-M6F
- IM393-L6E
- IM393-L6F
- IM393-X6E
- IM393-X6F

IM393-XX is part of CIPOS™ Tiny family of intelligent power modules which are designed for motor drives in household appliances covering a wide range of power from 100 W up to 1500 W with products such as:

- Washing machines
- Dish washers
- Refrigerators
- Air conditioning compressors
- Pumps

1.1 Product line-up

Table 1 IM393-XX Products

Part Number	Rating		Internal Circuit	Package	Isolation voltage (V_{RMS})	Main applications	
	Current (A)	Voltage (V)					
IM393-S6E(F)	6 A	600 V	3 ϕ Bridge Open emitter	E(Fully molded DIP Module) F(Fully molded SIP Module)	2000 V_{RMS} sinusoidal, 1min.	Refrigerator Dryer Dish washer	Fan Pump GPI
IM393-M6E(F)	10 A					Washing machine Dryer Elevator door	
IM393-L6E(F)	15 A					Washing machine Air conditioner Elevator door	
IM393-X6E(F)	20 A					Air conditioner	

1.2 Nomenclature

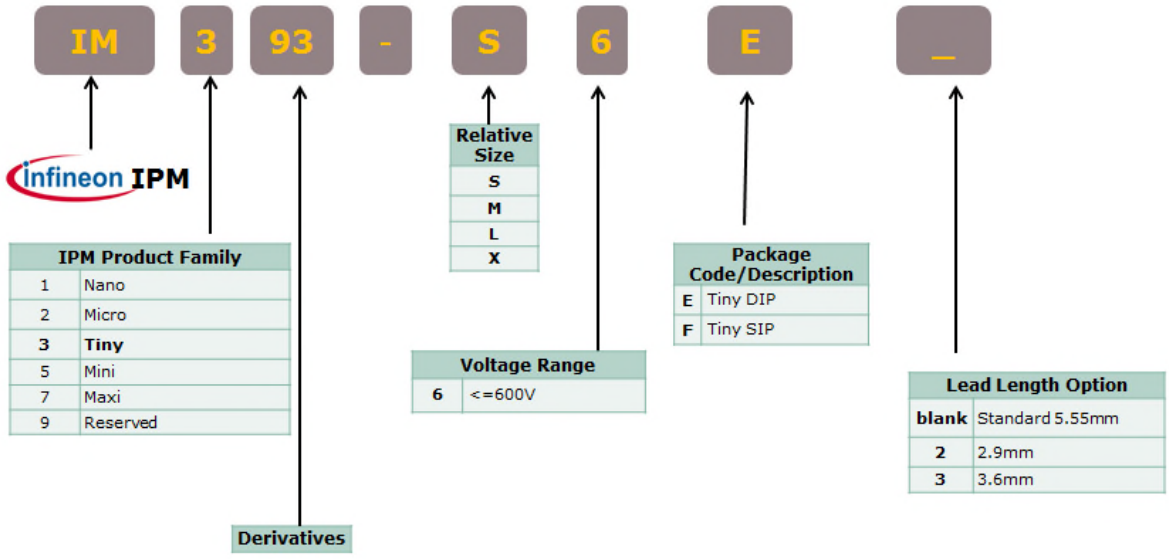

2 Internal components and package technology

2.1 Power transistor and diode technology

IM393-XX IPM products are based on new Infineon IGBT6 TRENCHSTOP™ technology [1]. This new IGBT generation is based on trench and field-stop technology, and offers significant improvements in terms of loss reduction. It features the well-known properties of robustness of Infineon's IGBT, including short-circuit-withstand capability and maximum-junction temperature. Moreover, all the advantages of this technology are maintained in order to achieve the highest efficiency and power density. The features include very low static parameters such as the saturation voltage of the IGBT or the forward voltage of the diode. Excellent dynamic parameters such as turn-off energy of the IGBT or the reverse-recovery charge of the diode are also valuable features. The forward diodes are ultrafast with very soft recovery characteristics that lead to a reduction in reverse-recovery and turn-on energy losses.

2.2 Control IC – Six-channel gate driver IC

The driver is a high-voltage, high-speed IGBT gate driver with three high-side and three low-side referenced output channels for three-phase applications. The IC is designed to be used with low-cost bootstrap power supplies. The bootstrap diode functionality has been integrated into this device to reduce the component count on the PCB. Proprietary HVIC and latch-up immune CMOS technologies have been implemented in a rugged monolithic structure. The floating logic input is compatible with standard CMOS and LSTTL output (down to 3.3 V logic). A current-trip function which terminates all six outputs can be done by an external current sense resistor. Enable functionality is available to terminate all six outputs simultaneously. An open-drain FAULT signal is provided to indicate that a fault has occurred. Fault conditions are cleared automatically after a delay programmed externally via an RC network connected to the RCIN input. The output drivers feature a high-pulse current buffer stage designed for minimum driver cross conduction. Shoot-through protection circuitry and a minimum dead-time circuitry have been integrated into this IC. Propagation delays are matched to simplify the HVIC's use in high-frequency applications.

The HVIC technology uses proprietary monolithic structures integrating bipolar, CMOS and lateral DMOS devices [2]. Using this mixed-signal HVIC technology, both high-voltage, level-shifting circuits, and low-voltage analog and digital circuits can be implemented. This technology places high-voltage circuits in a 'well' formed by polysilicon rings which can float 600 V within the same silicon, away from the low-voltage circuitry, as shown in Figure 1.

These HVIC gate drivers with floating switches are well-suited for topologies requiring high-side and bridge configuration.

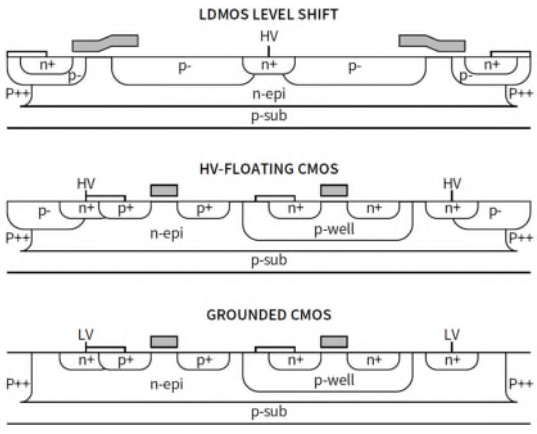

Figure 1 Structure and cross section of the HVIC

2.3 Thermistor

All IM393-XX IPMs have internal thermistors to sense the module temperature. Figure 2 shows the correlation between NTC temperature (T_{TH}) and the thermistor output voltage which can be used to set the threshold for over-temperature protection.

Table 2 Raw data of the thermistor used in IM393-XX

T [°C]	R_{min} [kΩ]	R_{typ} [kΩ]	R_{max} [kΩ]	Tol [%]	T [°C]	R_{min} [kΩ]	R_{typ} [kΩ]	R_{max} [kΩ]	Tol [%]
-40	1438.40	1568.15	1705.34	8.7%	45	18.930	20.097	21.282	5.9%
-35	1040.65	1130.82	1225.73	8.4%	50	15.448	16.432	17.436	6.1%
-30	761.64	825.03	891.47	8.1%	55	12.695	13.531	14.385	6.3%
-25	563.53	608.58	655.58	7.7%	60	10.4830	11.1942	11.9238	6.5%
-20	421.23	453.57	487.16	7.4%	65	8.6961	9.3033	9.9279	6.7%
-15	317.53	340.93	365.14	7.1%	70	7.2454	7.7652	8.3016	6.9%
-10	241.62	258.72	276.33	6.8%	75	6.0619	6.5084	6.9703	7.1%
-5	185.51	198.10	211.02	6.5%	80	5.0922	5.4767	5.8755	7.3%
0	143.62	152.98	162.53	6.2%	85	4.3017	4.6342	4.9800	7.5%
5	112.35	119.37	126.51	6.0%	90	3.6482	3.9366	4.2372	7.6%
10	88.440	93.740	99.109	5.7%	95	3.1056	3.3565	3.6186	7.8%
15	70.033	74.055	78.112	5.5%	100	2.6533	2.8721	3.1012	8.0%
20	55.770	58.837	61.918	5.2%	105	2.2748	2.4661	2.6669	8.1%
25	44.650	47.000	49.350	5.0%	110	1.9567	2.1245	2.3009	8.3%
30	35.772	37.737	39.711	5.2%	115	1.6886	1.8360	1.9913	8.5%
35	28.801	30.449	32.110	5.5%	120	1.4616	1.5915	1.7287	8.6%
40	23.298	24.682	26.084	5.7%	125	1.2690	1.3837	1.5050	8.8%

Thermistor temperature (or voltage reading) can then be linked to the IGBT junction temperature. The V_{TH} can be used as a microcontroller input to monitor IGBT junction temperature during operation.

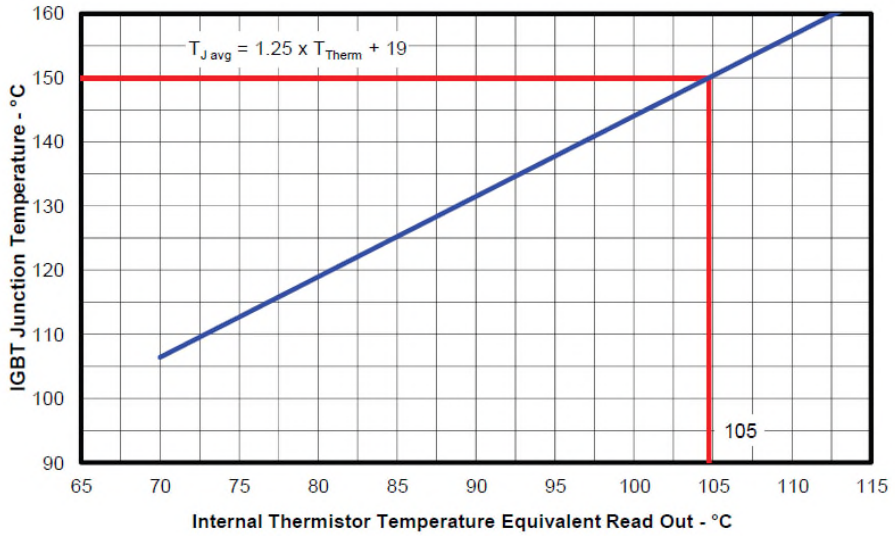

Figure 2 IGBT junction temperature vs. internal thermistor temperature for IM393-L6E

Figure 2 is valid only for the following conditions:

- V_{DC} = 300 V
- PWM sinusoidal modulation
- I_{rms} phase = 5 A
- F_{sw} = 16 kHz
- F_{mod} = 50 Hz
- MI = 0.8
- PF = 0.6
- Heat sink R_{th} = 1.25 °C/W

For different application conditions, the difference between T_J and T_{TH} will be smaller if the module dissipates less heat. Also in the extreme case of zero current, T_J and T_{TH} will be identical. In any case, it should be ensured for safety reasons that the absolute maximum junction temperature is not reached.

Please note that an over-temperature event in the IGBT will only be visible in the NTC readings after a certain time, which depends significantly on the application conditions.

2.4 Package technology

IM393-XX offers the smallest size while providing high-power density up to 600 V and 20 A by employing TRENCHSTOP™ IGBT and emitter-controlled diodes with a six-channel gate drive IC. It contains all power components such as IGBTs, and isolates them from each other and from the heat sink. All low-power components such as the gate drive IC and thermistor are assembled on a lead frame.

The electric insulation is provided by the mold compound, which is simultaneously the thermal contact to the heat sink. In order to further decrease the thermal impedance, the internal lead-frame design has been optimized [3]. Figure 3 shows the external view of the IM393-XX package.

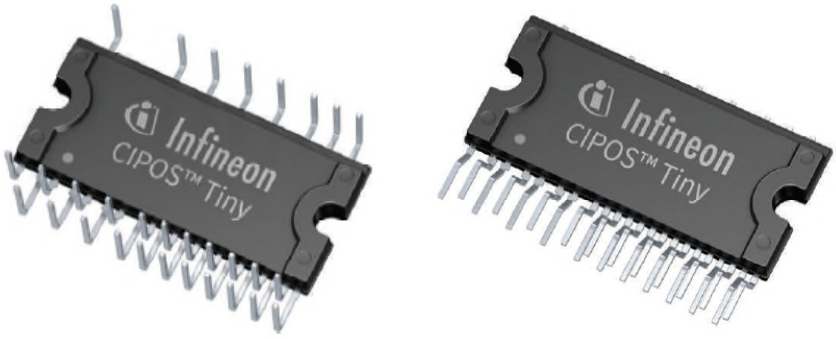

(a) Dual in-line package (b) Single in-line package

Figure 3 External view of IM393-XX

3 Product overview and pin description

3.1 Internal circuit and features

Figure 3 illustrates the internal block diagram of the IM393-XX. It consists of a three-phase IGBT inverter circuit and a driver IC with control functions. The detailed features and integrated functions of IM393-XX are described as follows:

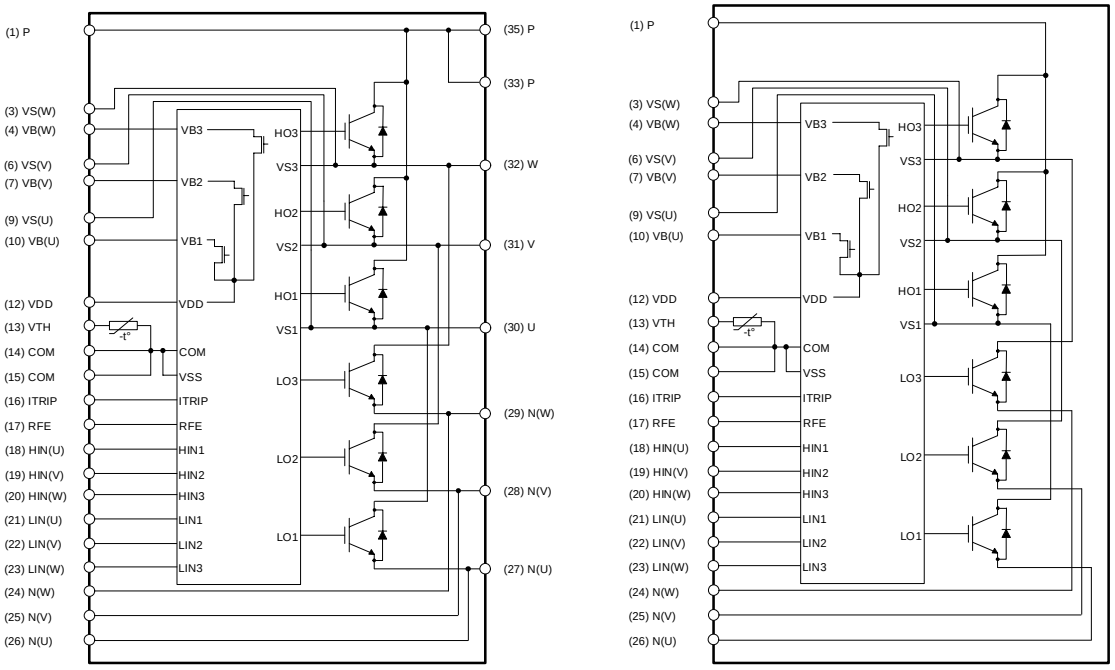

(a) Dual in-line package (b) Single in-line package

Figure 4 Internal circuit

Features

- 600 V / 6 A to 20 A rating in one physical package size (mechanical layouts are identical)
- Motor power range from 100 W to 1.5 kW
- Fully isolated dual in-line package (DIP) and single in-line package (SIP) molded module
- Infineon low- $V_{CE(ON)}$ TRENCHSTOP™ IGBTs with separate freewheeling diode
- Undervoltage lockout for all channels
- Rugged gate driver technology with stability against transients and negative voltage
- Integrated bootstrap functionality
- Matched delay times of all channels / Built-in deadtime
- Over-current protection
- Lead-free terminal plating; RoHS-compliant
- 3.3 V Schmitt triggered input logic
- Cross conduction preventing logic
- Low-side emitter pins accessible for current monitoring
- Active high input signal logic
- Isolation 2000 V_{RMS} min and CTI>600
- High operating case temperature, T_{Cmax} = 125°C
- Temperature monitor

3.2 Maximum electrical rating

Table 3 Detailed description of absolute maximum ratings (IM393-M6E/F case)

Item	Symbol	Rating	Description
Max. blocking voltage	V_{CES}	600 V	The sustained collector-emitter voltage of internal IGBTs
Output RMS current	I_C	10 A	The allowable RMS IGBT collector current at steady state and T_c = 25 °C.
Output peak current	I_{Peak}	15 A	The allowable peak IGBT collector current at T_c = 25°C
Junction temperature	T_J	-40 ~ 150°C	Considering temperature ripple on the power chips, the maximum junction temperature rating of IM393-XX is 150°C.
Operating case temperature range	T_C	-40 ~ 125°C	T_c (case temperature) is defined as a temperature of the package surface underneath the specified power chip. Please mount a temperature sensor on a heat-sink surface at the defined position in Figure 5 so as to get accurate temperature information.

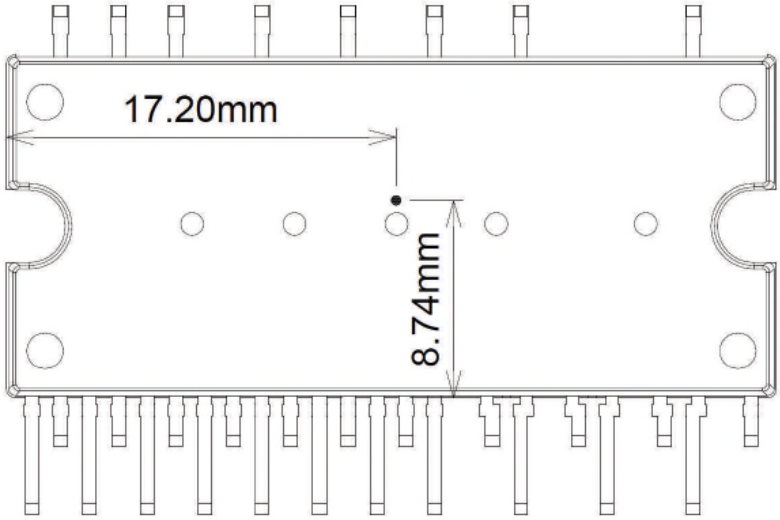

Figure 5 T_C measurement point

3.3 Description of the input and output pins

The following tables define the DIP type of IM393-XX input and output pins. The detailed functional descriptions are as follows:

Pin	Name	Description
1	P	Positive bus input voltage
2	N/A	None
3	VS(W)	W-phase high side floating supply offset voltage
4	VB(W)	W-phase high side floating supply voltage
5	N/A	None

6	VS(V)	V-phase high side floating supply offset voltage
7	VB(V)	V-phase high side floating supply voltage
8	N/A	None
9	VS(U)	U-phase high side floating supply offset voltage
10	VB(U)	U-phase high side floating supply voltage
11	N/A	None
12	VDD	Low side control supply
13	VTH	Temperature monitor
14	COM	Low side control negative supply
15	COM	Low side control negative supply
16	ITRIP	Over current protection input
17	RFE	RCIN / Fault / Enable
18	HIN(U)	U-phase high side gate driver input
19	HIN(V)	V-phase high side gate driver input
20	HIN(W)	W-phase high side gate driver input
21	LIN(U)	U-phase low side gate driver input
22	LIN(V)	V-phase low side gate driver input
23	LIN(W)	W-phase low side gate driver input
24	N(W)	W-phase low side emitter
25	N(V)	V-phase low side emitter
26	N(U)	U-phase low side emitter
27	N(U)	U-phase low side emitter (DIP only)
28	N(V)	V-phase low side emitter (DIP only)
29	N(W)	W-phase low side emitter (DIP only)
30	U	U-phase output (DIP only)
31	V	V-phase output (DIP only)
32	W	W-phase output (DIP only)
33	P	Positive bus input voltage (DIP only)
34	N/A	None
35	P	Positive bus input voltage (DIP only)
36	N/A	None

The following tables define the SIP type of IM393-XX input and output pins. The detailed functional descriptions are as follows:

Pin	Name	Description
1	P	Positive bus input voltage
2	N/A	None
3	VS(W) / W	W-phase high side floating supply offset voltage / W-phase output
4	VB(W)	W-phase high side floating supply voltage
5	N/A	None
6	VS(V) / V	V-phase high side floating supply offset voltage / V-phase output
7	VB(V)	V-phase high side floating supply voltage
8	N/A	None
9	VS(U) / U	U-phase high side floating supply offset voltage / U-phase output
10	VB(U)	U-phase high side floating supply voltage
11	N/A	None
12	VDD	Low side control supply
13	VTH	Temperature monitor
14	COM	Low side control negative supply
15	COM	Low side control negative supply
16	ITRIP	Over current protection input
17	RFE	RCIN / Fault / Enable
18	HIN(U)	U-phase high side gate driver input
19	HIN(V)	V-phase high side gate driver input
20	HIN(W)	W-phase high side gate driver input
21	LIN(U)	U-phase low side gate driver input
22	LIN(V)	V-phase low side gate driver input
23	LIN(W)	W-phase low side gate driver input
24	N(W)	W-phase low side emitter
25	N(V)	V-phase low side emitter
26	N(U)	U-phase low side emitter

High-side bias voltage pins for driving the IGBT

Pins: VB(U) – VS(U) , VB(V) – VS(V), VB(W) – VS(W)

- These pins provide the gate drive power to the high-side IGBTs.
- The ability to utilize a bootstrap circuit scheme for the high-side IGBTs eliminates the need for external power supplies.
- Each bootstrap capacitor is charged from the V_{DD} supply during the ON-state of the corresponding low-side IGBT or the freewheeling state of the low-side freewheeling diode.
- In order to prevent malfunctions caused by noise and ripple in the supply voltage, a good quality (low ESR, low ESL) filter capacitor should be mounted very close to these pins.

Low-side bias voltage pin

Pin: VDD

- This is the control supply pin for the internal IC.
- In order to prevent malfunctions caused by noise and ripple in the supply voltage, a good quality (low ESR, low ESL) filter capacitor should be mounted very close to this pin.

Low-side common supply ground pin

Pin: COM

- This pin connects the control ground for the internal IC.

Signal Input pins

Pins: HIN(U), HIN(V), HIN(W), LIN(U), LIN(V), LIN(W)

- These are pins to control the operation of the internal IGBTs.
- They are activated by voltage input signals. The terminals are internally connected to a Schmitt trigger circuit composed of 5 V-class CMOS.
- The signal logic of these pins is active-high. The IGBT associated with each of these pins will be turned ON when a sufficient logic voltage is applied to these pins.
- The wiring of each input should be as short as possible to protect the IM393-XX against noise influences.
- To prevent signal oscillations, an RC coupling is recommended as illustrated in Figure 4.1.

Over-current detection pin

Pin: ITRIP

- The current-sensing shunt resistor should be connected between the pin N (emitter of low-side IGBT) and the power ground to detect short-circuit current (refer to Figure 4.3). An RC filter should be connected between the shunt resistor and the pin ITRIP to eliminate noise.
- The integrated comparator is triggered if the voltage V_{ITRIP} is higher than 0.49 V. The shunt resistor should be selected to meet this level for the specific application. In case of a trigger event, the voltage at pin RFE is pulled down to LOW.
- The connection length between the shunt resistor and ITRIP pin should be minimized.

RCIN/Fault/Enable input pin

Pin: RFE

- In case of an over-current event, the FLT/EN pin will get low with the turning ON of the open-drain MOSFET. This pin is used to post I_{TRIP} to switch turn-OFF clear time. (see section 5.2)
- There are two situations in which the fault is reported via the RCIN/FLT/EN pin.
- The first is an undervoltage condition of V_{DD}, the second is an over-current event condition, and the FLT/EN pin will get low with the turning ON of the open-drain MOSFET.
- When the fault has been removed, the fault clear timer is started, and the length of the fault clear time period is determined by the external capacitor value. (see section 5.2)

Temperature-monitoring output pin

Pin: VTH

- The VTH pin provides a voltage linked to NTC temperature. (see section 5.4)

Positive DC-link pin

Pin: P

- This is the DC-link positive power supply pin of the IM393-XX IPM.
- It is internally connected to the collectors of the high-side IGBTs.
- In order to suppress the surge voltage caused by the DC-link wiring or PCB-pattern inductance, connect a smoothing filter capacitor close to this pin. (Typically metal film capacitors are used.)

Negative DC-link pins

Pins: N(U), N(V), N(W)

- These are the DC-link negative power supply pins (power ground) of the inverter.
- These pins are connected to the low-side IGBT emitters of the each phase.

Inverter power output pins

Pins: U, V, W

- Inverter output pins for connecting to the inverter load (e. g. motor).

3.4 Outline drawings

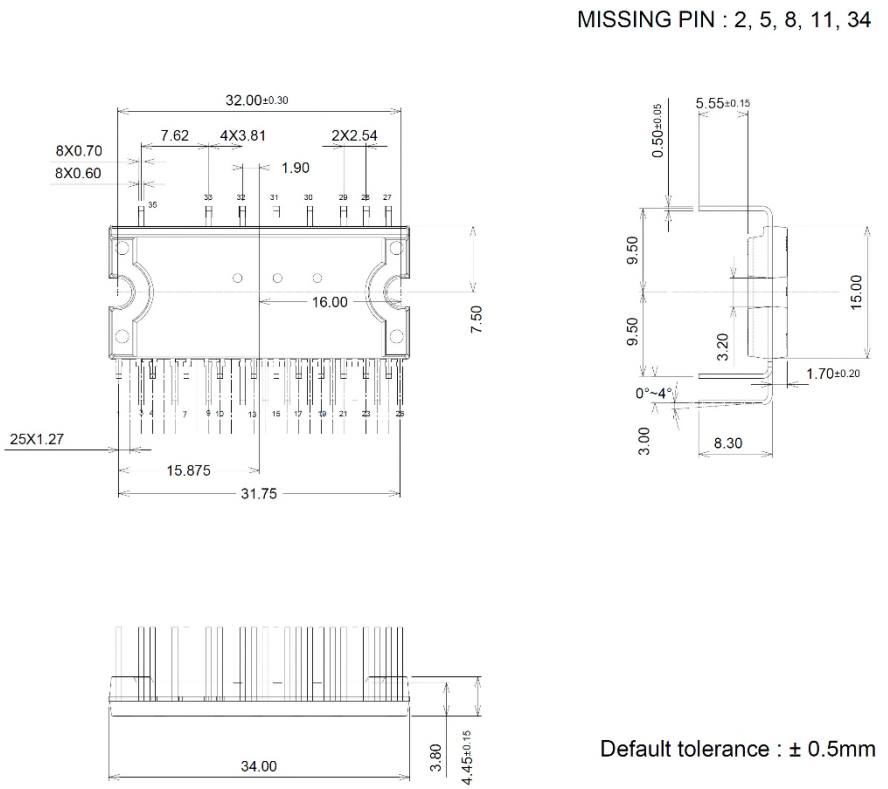

Figure 6 DIP version (IM393-X6E)

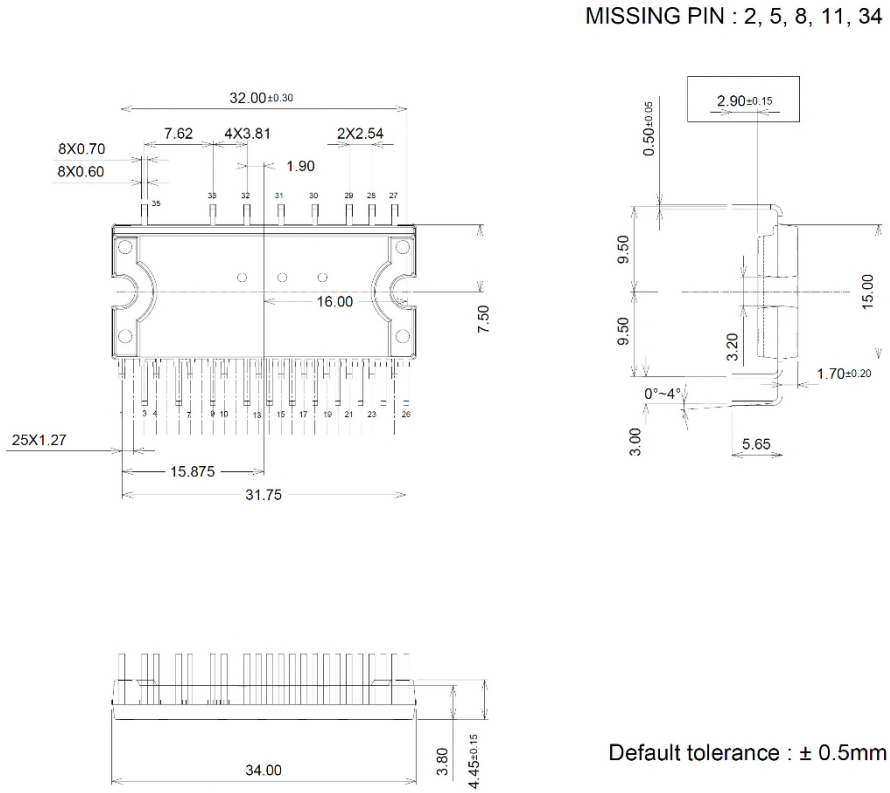

Figure 7 DIP version (IM393-X6E2)

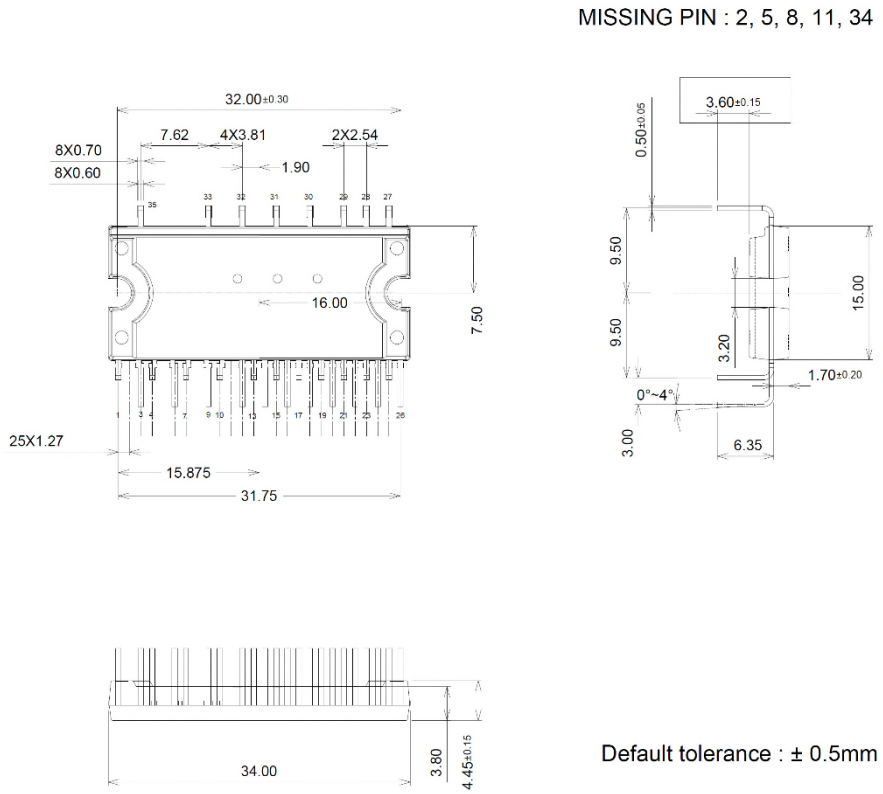

Figure 8 DIP version (IM393-X6E3)

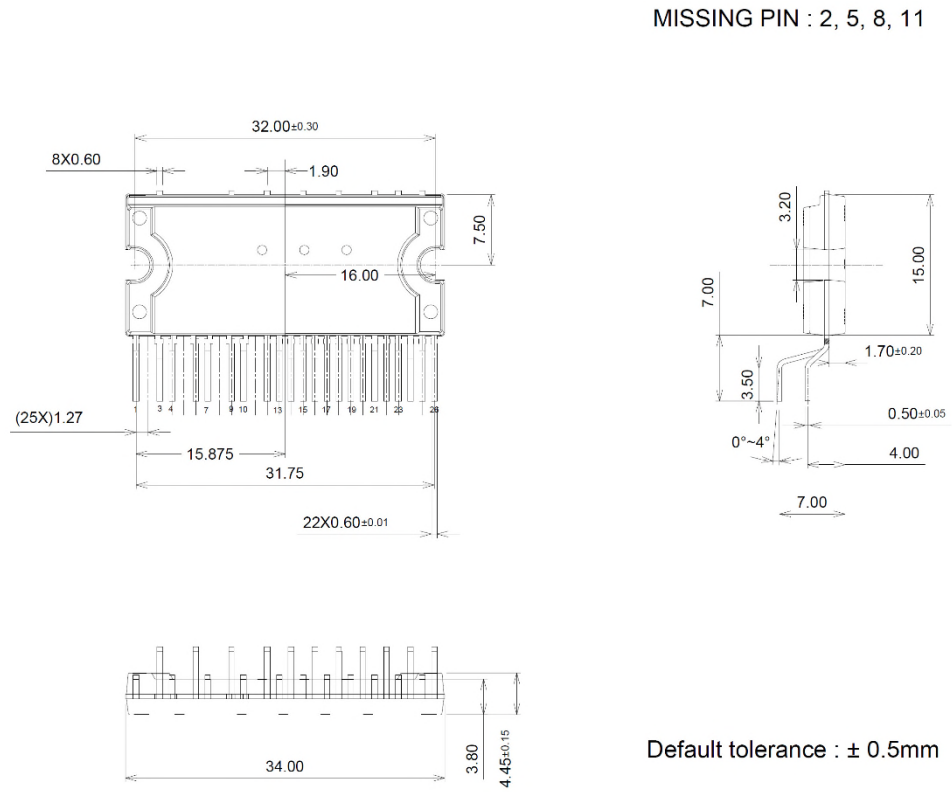

Figure 9 SIP version (IM393-X6F)

4 Interface circuit and layout guide

4.1 Input/output signal connection

The following shows the I/O interface circuit between microcontroller and IM393-XX. Because the IPM input logic is active-high with internal pull-down resistors, pulled-up resistors are not required. The RFE output is open-drain MOSFET configured. Thus this signal should be pulled up to the positive side of 5 V or 3.3 V external logic power supply with a resistor. The resistor should be carefully chosen to limit current (e.g. 1.2 MΩ). In case of over-current, the RFE pin will get low as the MOSFET turns ON. When the over-current condition is over, the MOSFET will then turn OFF, however, all the IGBTs will remain OFF until the fault is cleared (see section 5.3).

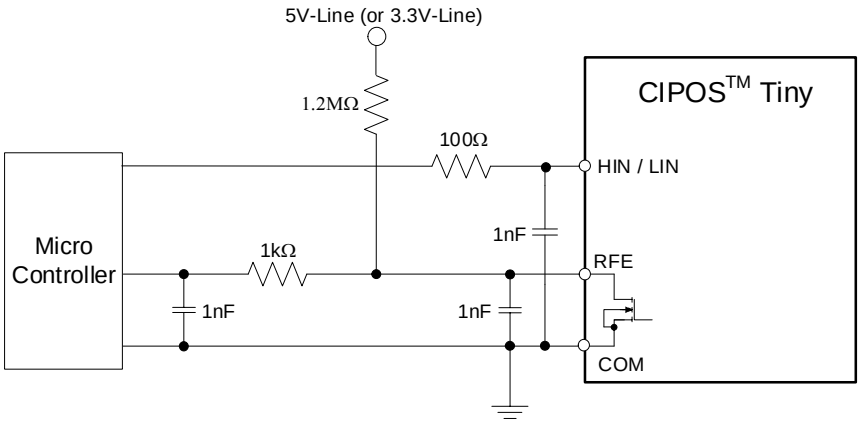

Figure 10 Recommended microcontroller I/O interface circuit

Table 4 Maximum rating of input and RFE pin

Item	Symbol	Condition	Rating	Unit
Module supply voltage	V_{DD}	Applied between V_{DD} – COM	-0.3 ~ 20	V
Input voltage	V_{IN}	Applied between HIN(U), HIN(V), HIN(W) – COM LIN(U), LIN(V), LIN(W) – COM	-0.3 ~ 20	V
Fault output supply voltage	RFE	Applied between RFE – COM	-0.3 ~ 20	V

The input and fault output maximum rating voltages are listed in Table 4. It is recommended to use 5 V logic supply, which is the same for the input signals of the fault output. Bypass capacitors should be mounted as close as possible to the RFE pin to avoid any noise that might switch the open-drain MOSFET ON.

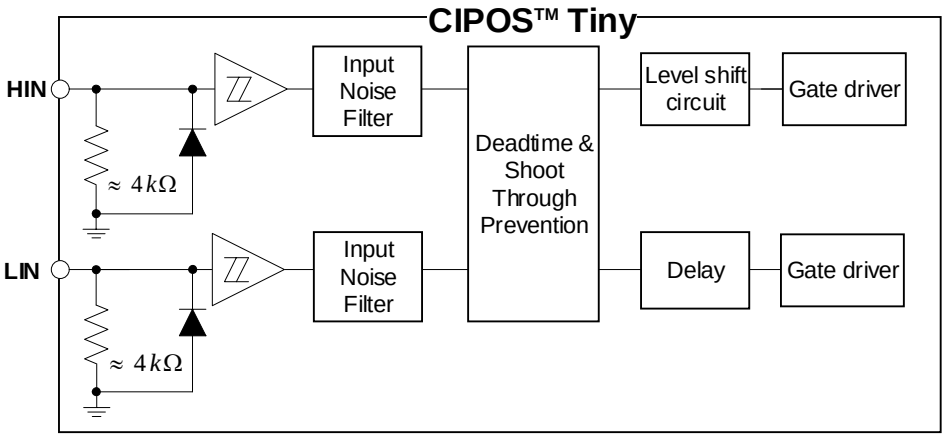

Figure 11 Internal structure of signal input terminals

Because IM393-XX employs active-high input logic, the power sequence restriction between the control supply and the input signal during start-up or shut-down operation does not exist. Therefore it makes the system fail-safe. In addition, pull-down resistors are built into each input circuit. This reduces the required external component count. Input Schmitt-trigger, noise filter, deadtime and shoot-through prevention functions provide beneficial noise rejection to short input pulses. Furthermore, by lowering the turn ON and turn OFF threshold voltage of the input signal as shown in Table 4.2, a direct connection to 3.3 V-class microcontroller or DSP is possible.

Table 5 Input threshold voltage (at V_{DD} = 15 V and T_J = 25°C)

Item	Symbol	Condition	Min.	Typ.	Max.	Unit
Logic "1" input voltage	$V_{IN,TH+}$	LIN, HIN, RFE	2.5	-	-	V
Logic "0" input voltage	$V_{IN,TH-}$		-	-	0.8	V

As shown in Figure 11, IM393-XX input signal integrates a 4 kΩ (typical) pull-down resistor. Therefore, when using an external filtering resistor between the microcontroller output and IM393-XX input, attention should be paid to the signal voltage drop at the IPM input terminal to satisfy the turn ON threshold voltage requirement.

For instance, R = 100 Ω and C = 1 nF for the parts shown in Figure 10.

4.2 Input/output signal connection

Figure 4.3 and 4.4 show a typical application circuit interface schematic with control signals connected directly to the microcontroller.

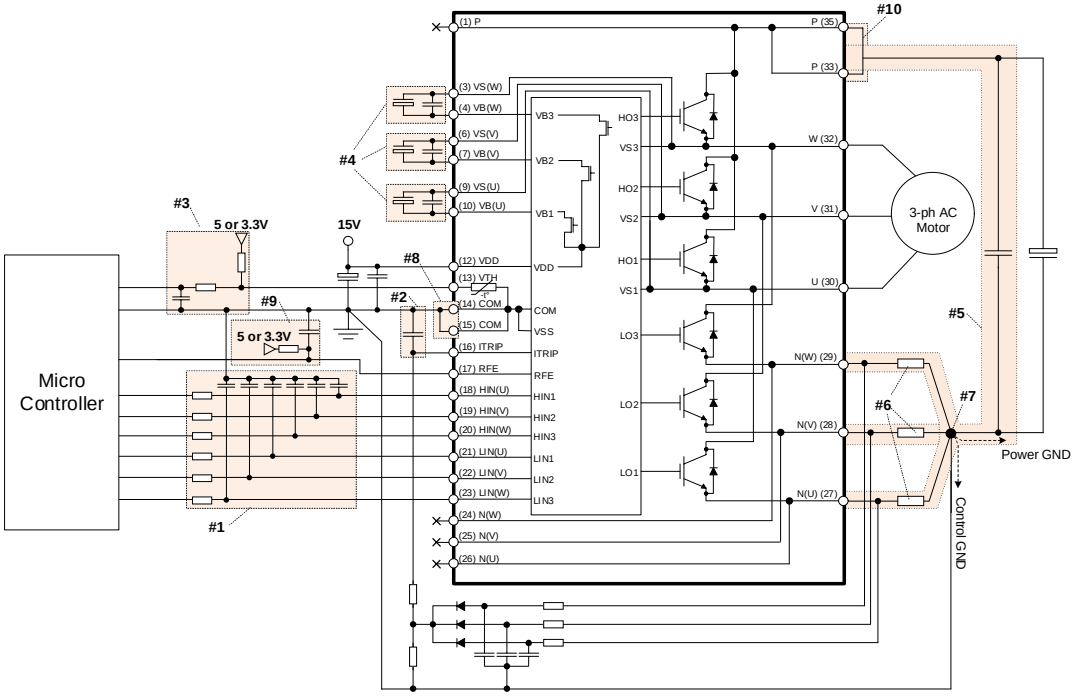

Figure 12 Example of application circuit (DIP package)

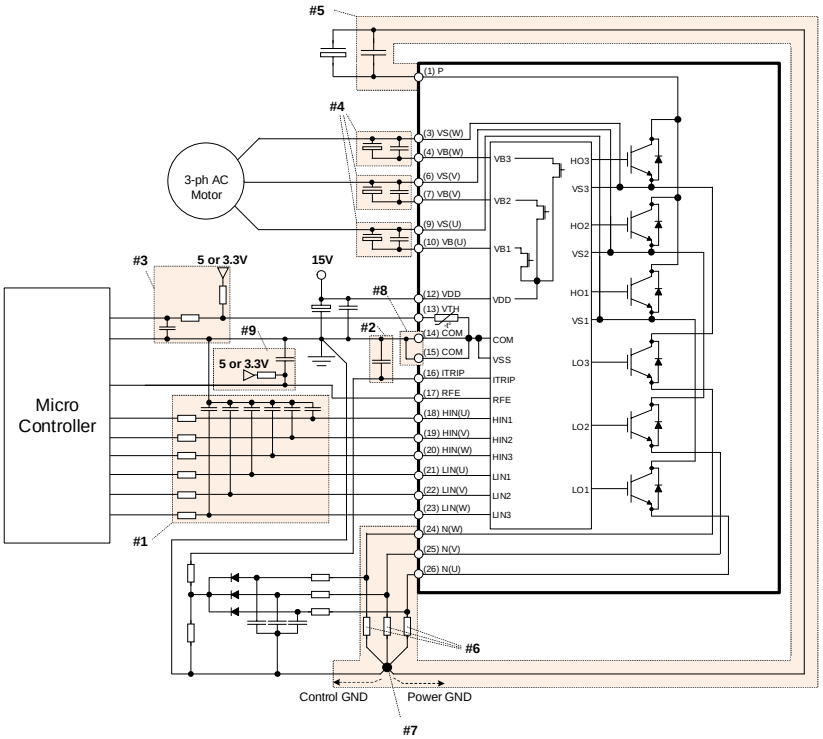

Figure 13 Example of application circuit (SIP package)

Notes:

1. **Input circuit**
   - RC filter can be used to reduce input signal noise. (100 Ω, 1 nF)
   - The capacitors should be located close to CIPOS™ Tiny (to COM terminal especially).
2. **Itrip circuit**
   - To prevent a malfunctioning of the protection function, an RC filter is recommended.
   - The capacitor must be located close to Itrip and COM terminals.
3. **VTH circuit**
   - This terminal should be pulled up to the bias voltage of 5 V/3.3 V by a proper resistor to define suitable voltage for temperature monitoring.
   - It is recommended that the RC filter be placed close to the controller.
4. **VB-VS circuit**
   - Capacitors for high-side floating supply voltage should be placed close to VB and VS terminals.
   - Additional high-frequency capacitors, typically 0.1 µF, are strongly recommended.
   - Overlap of pattern-to-motor and pattern-to-bootstrap capacitors should be minimized. (SIP only)
5. **Snubber capacitor**
   - The wiring between CIPOS™ Tiny, snubber capacitor and shunt resistors should be as short as possible.
6. **Shunt resistor**
   - SMD-type shunt resistors are strongly recommended to minimize internal stray inductance.
7. **Ground pattern**
   - Pattern overlap of power ground and signal ground should be minimized. The patterns should be connected at the common end of the shunt resistors only, for the same potential.
8. **COM pattern**
   - In the case of a DIP package, pins 24, 25 and 26 must be left unconnected, as COM is connected to pin 29, 28 and 27 by the shunt resistor.
   - It is highly advisable to connect both pins 14 and 15 together.
9. **RFE circuit**
   - To set up R and C parameters for fault-clear time, please refer to Figure 5.
   - For normal operation, RFE (pin 17) should always be pulled up to 5 V or 3.3 V via the pull resistor.
   - This R is also mandatory for fault reporting function, as it is an open-drain structure.
10. **P pattern**
    - In the case of a DIP package, pin 1 can be left unconnected, as positive bus voltage is connected by pins 35 and 33 that are internally connected to pin 1.

4.3 Recommended circuit current of power supply

Control and gate driver power for the IM393-XX is normally provided by a single 15 V supply that is connected to the module VDD Pin. The circuit current of VDD control supply of IM393-L6E is shown in below Table 6.

Table 6 The circuit current of control power supply of IM393-L6E (Unit:[mA])

Item		Static (Typ.)	Dynamic (Typ.)	Total (Typ.)
V_{DD} = 15 V	F_{SW} = 5 kHz	4.02	0.26	4.28
	F_{SW} = 15 kHz	4.02	0.78	4.83
V_{DD} = 20 V	F_{SW} = 20 kHz	8.03	4.08	12.11

And the circuit current of the 5 V logic power supply (VTH, RFE and input terminal) is about 20 mA.

Finally, the recommended minimum circuit currents of power supply considering margins are shown in Table 7.

Table 7 The recommended minimum circuit current of control power supply (Unit:[mA])

Item	The circuit current of +15 V control supply	The circuit current of +5 V logic supply
$V_{DD} \leq 20$ V, $F_{SW} \leq 20$ kHz	90	45

4.4 Recommended layout for over-current protection (OCP) and short-circuit protection (SCP) functions

It is recommended to make the I_{TRIP} filter capacitor connections to the IM393-XX pins as short as possible. The ITRIP filter capacitor should be connected to the COM pin directly without overlapping ground pattern. The signal ground and power ground should be as short as possible and connected at only one point via the filter capacitor of V_{DD} line. The I_{TRIP} function combined with the external shunt resistor can be used to detect over-current events in the ground path that will result in damages to the IPM. The internal HVIC gate driver continuously monitors the voltage on ITRIP pin. If this voltage exceeds the reference voltage (typ. 0.49 V), a fault signal will be generated on the RFE pin and all six IGBTs will be turned OFF.

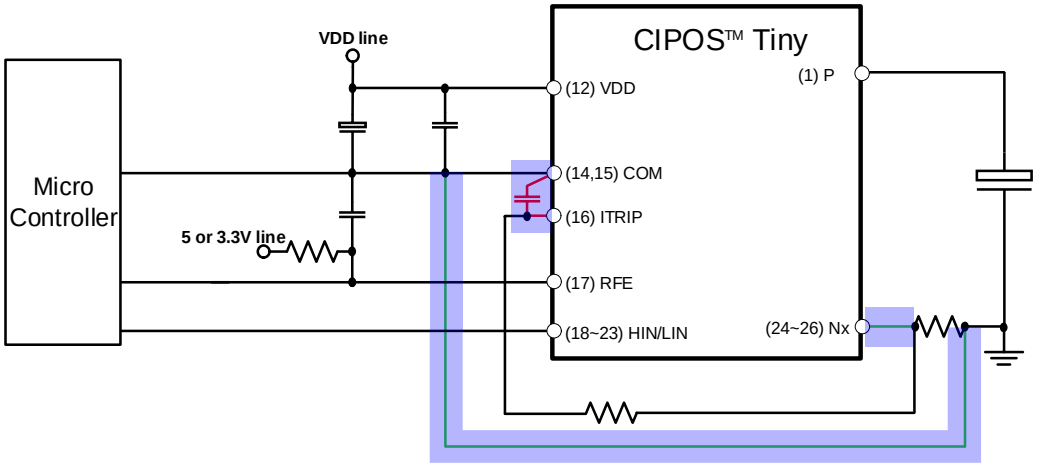

Figure 14 Example of layout pattern for OCP and SCP functions

4.5 Recommended wiring of shunt resistor and snubber capacitor

External current-sensing resistors are applied to detect over-current of phase currents. A long wiring pattern between the shunt resistors and IM393-XX will cause excessive surges that might damage the IPM-internal IC and current-detection components. This may also distort the sensing signals that may lead to loss of control when driving a motor. To decrease the pattern inductance, the wiring between the shunt resistors and the IM393-XX should be as short as possible, and any loop should be avoided.

As shown in Figure 15, snubber capacitors should be installed in the right location so as to suppress surge voltages effectively. Generally a high-frequency, non-inductive capacitor of around 0.1 ~ 0.22 µF is recommended. If the snubber capacitor is installed in the wrong location, ‘1’ as shown in Figure 15, the snubber capacitor cannot suppress the surge voltage effectively. If the capacitor is installed in location ‘2’, the charging and discharging currents generated by wiring inductance and the snubber capacitor will appear on the shunt resistor. This will impact the current-sensing signal, and the SC protection level will be a little lower than the calculated design value. The “2” position surge suppression effect is greater than in locations ‘1’ or ‘3’. The ‘3’ position is a reasonable compromise with better suppression than in location ‘1’ without impacting the current-sensing signal accuracy. For this reason, location ‘3’ is generally used.

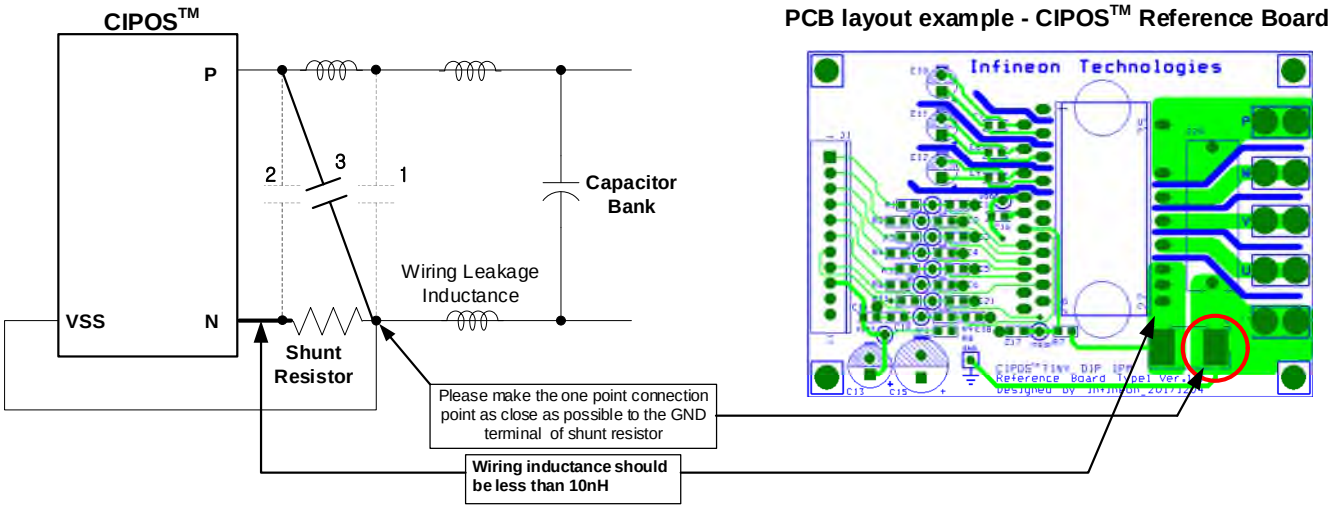

Figure 15 Recommended wiring of shunt resistor and snubber capacitor

General suggestions and summary:

- PCB traces should be designed as short as possible and the area of the circuit (power or signal) should be minimized to avoid any noise.
- Make sure there is a good distance between switching lines with high di/dt and dV/dt and the signal lines, as they are very sensitive to electrical noise. Specifically, the trace of each phase OUT carrying significant fast current and voltage transition should be separated from the logic lines and analog sensing circuit (R_{SHUNT}, I_{TRIP}, RFE).
- Place shunt resistors as close as possible to the low-side pins of the IPM. Parasitic inductance should be as low as possible. Use of a low-inductance SMD resistor is highly advisable.
- Avoid any ground loop. Only a single path must connect to COM.
- Place each RC filter as close as possible to the IPM pins to increase its efficiency.
- Fixed voltage traces such as GND and high voltage lines can be used to shield the logic and analog lines from electrical noise produced by the switching lines.

4.6 Pin and screw hole coordinates for IM393-XX footprint

Figure 16 shows IM393-XX position on the PCB to indicate center coordinates of each pin and screw hole in Table 8 and Table 9.

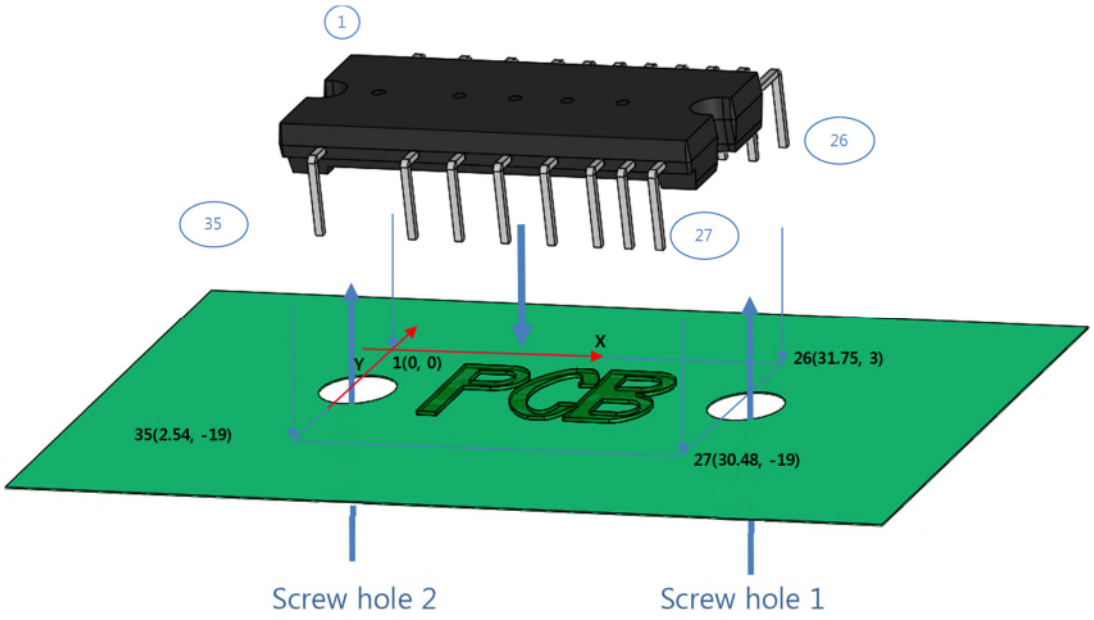

(a) Dual in-line package

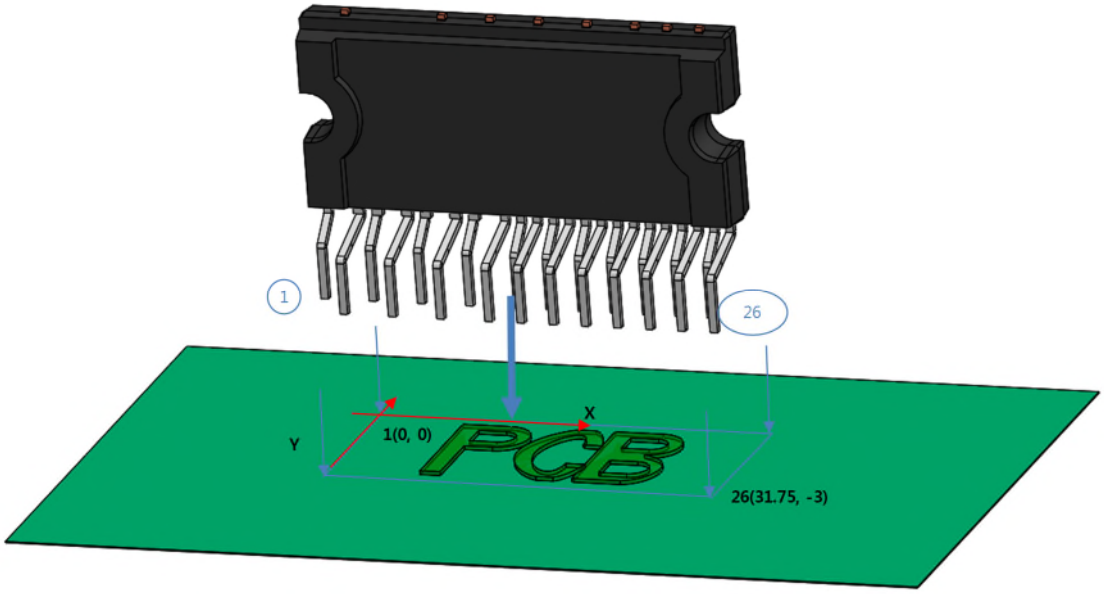

(b) Single in-line package

Figure 16 IM393-XX positions on PCB

Table 8 Pin and screw hole coordinates for DIP package (Unit:[mm])

Pin Number		X	Y	Pin Number		X	Y
Signal pin	1	0.00	0.00	Signal pin	20	24.13	3.00
	2	N/A	N/A		21	25.40	0.00
	3	2.54	3.00		22	26.67	3.00
	4	3.81	0.00		23	27.94	0.00
	5	N/A	N/A		24	29.21	3.00
	6	6.35	3.00		25	30.48	0.00
	7	7.62	0.00		26	31.75	3.00
	8	N/A	N/A	Power pin	27	30.48	-19.00
	9	10.16	3.00		28	27.94	-19.00
	10	11.43	0.00		29	25.40	-19.00
	11	N/A	N/A		30	21.59	-19.00
	12	13.97	3.00		31	17.78	-19.00
	13	15.24	0.00		32	13.97	-19.00
	14	16.51	3.00		33	10.16	-19.00
	15	17.78	0.00		34	N/A	N/A
	16	19.05	3.00		35	2.54	-19.00
	17	20.32	0.00		36	N/A	N/A
	18	21.59	3.00	Screw hole	1	31.87	-9.50
	19	22.86	0.00		2	-0.13	-9.50

Table 9 Pin and screw hole coordinates for SIP package (Unit:[mm])

Pin Number		X	Y	Pin Number		X	Y
Signal pin	1	0.00	0.00	Signal pin	14	16.51	-3.00
	2	N/A	N/A		15	17.78	0.00
	3	2.54	-3.00		16	19.05	-3.00
	4	3.81	0.00		17	20.32	0.00
	5	N/A	N/A		18	21.59	-3.00
	6	6.35	-3.00		19	22.86	0.00
	7	7.62	0.00		20	24.13	-3.00
	8	N/A	N/A		21	25.40	0.00
	9	10.16	-3.00		22	26.67	-3.00
	10	11.43	0.00		23	27.94	0.00
	11	N/A	N/A		24	29.21	-3.00
	12	13.97	-3.00		25	30.48	0.00
	13	15.24	0.00		26	31.75	-3.00

5 Function and protection circuit

5.1 Over-current protection

IM393-XX is equipped with an I_{TRIP} input pin. Together with an external shunt resistor, this functionality can be used to detect over-current events in the negative DC bus. The internal HVIC gate driver will continuously monitor the voltage on the I_{TRIP} pin. Whenever this voltage exceeds the reference voltage (typ. 0.49 V), a fault signal will be generated on the RFE pin, and all six IGBTs will be turned OFF. Typically, the maximum short-circuit current magnitude is gate-dependent. A higher gate voltage results in a larger short-circuit current. In order to avoid this potential problem, the maximum over-current trip level is generally set below twice the nominal rated collector current.

5.1.1 Timing chart of over-current protection (OCP)

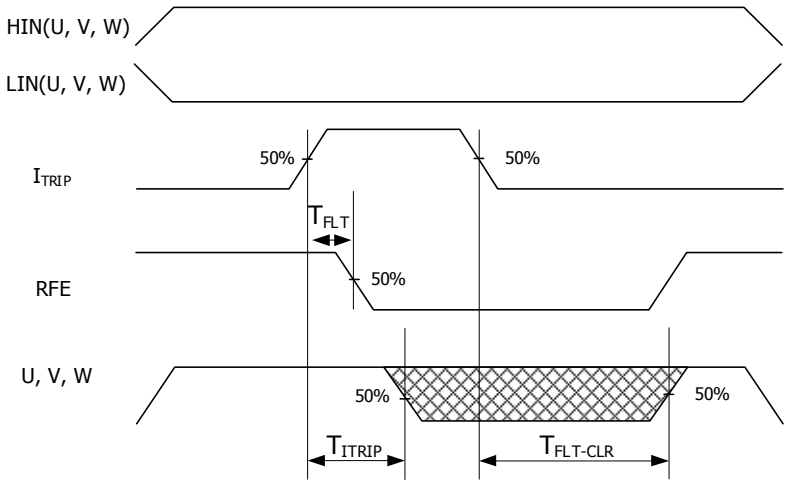

Figure 17 Timing chart of over-current protection function

The threshold of over-current protection can be determined by V_{ITRIP+} / R_{SHUNT}, if a single bus shunt is used, and is directly connected to I_{TRIP} pin. The following table shows the delay time of fault reporting and I_{TRIP} shutdown:

Table 10 Dynamic electrical characteristics

Symbol	Description	Min.	Typ.	Max.	Unit	conditions
T_{FLT}	I_{TRIP} to fault propagation delay	400	600	800	ns	V_{IN} = 0 V or 5 V, V_{ITRIP} = 5 V
T_{ITRIP}	I_{TRIP} to six switches turn OFF propagation delay	-	-	1.5	µs	I_C = 5 A, V_{DC} = 300 V

In the case of a short-circuit, the current level will rise very quickly to the saturation current of the IGBT. It is critical to ensure that all IGBTs are turned OFF as soon as possible. Since the IGBTs in IM393-XX are short-circuit rated (see Table 11), the safe operating of the IPM is guaranteed by minimizing the delay of the external current-sensing circuit, and ensuring its delay plus T_{ITRIP} is less than the IGBT short-circuit rating time. Because IGBT short circuit rating depends a lot on the gate voltage that is influenced by V_{DD} and junction temperature, it is important to consider all possible conditions.

Table 11 IGBT short-circuit ratings

Item	Symbol	Condition	Value	Unit
Short-circuit withstand time	T_{SC}	T_J < 150 °C, V_{DC} = 360 V, V_{DD} = 15 V	3	µs

5.1.2 Selecting current-sensing shunt resistor

The value of the current-sensing resistor is calculated by the following equation:

$$R_{SH} = \frac{V_{IT,TH+}}{I_{OC}} \quad (1)$$

Where $V_{IT,TH+}$ is the ITRIP positive-going threshold voltage of IM393-XX. It is typically 0.49 V. I_{OC} is the current of OC detection level.

The maximum value of the OC protection level should be set lower than the repetitive peak collector current in the datasheet considering the tolerance of the shunt resistor.

For example, the maximum peak collector current of IM393-L6E/F is 22.5 A_{peak}, and thus, the recommended value of the shunt resistor is calculated as

$$R_{SH(\min)} = \frac{0.49}{22.5} = 0.022\ \Omega$$

For the power rating of the shunt resistor, the following list should be considered:

- Maximum load current of inverter (I_{RMS})
- Shunt resistor value at Tc = 25°C (R_{SH})
- Power derating ratio of shunt resistor at T_{SH} = 100°C according to the manufacturer's datasheet
- Safety margin

The shunt resistor power rating is calculated by the following equation:

$$P_{SH} = \frac{I_{rms}^2 \times R_{SH} \times \text{margin}}{\text{derating ratio}} \quad (2)$$

For example with IM393-L6E/F and R_{SH} = 22 mΩ:

- Max. load current of the inverter : 6 A_{RMS}
- Power derating ratio of shunt resistor at T_{SH}=100°C : 80 %
- Safety margin : 30 %

$$P_{SH} = \frac{5^2 \times 0.022 \times 1.3}{0.8} = 0.9\ W$$

A proper power rating of shunt resistor should then exceed 1 W, e.g. 1.5 W.

Based on the previous equations, conditions, and calculation method, the minimum shunt resistance and resistor power according to IM393-XX products have been introduced and are listed in Table 12.

Note that a proper resistance and power rating, which is higher than the minimum value, should be chosen considering the over-current protection level required in the application.

Table 12 Minimum R_{SH} and P_{SH}

Product	Maximum peak current	Minimum shunt resistance, R_{SH}	Minimum shunt resistor power, P_{SH}
IM393-X6E/F	30 A	16 mΩ	3 W
IM393-L6E/F	22.5 A	22 mΩ	2 W
IM393-M6E/F	15 A	33 mΩ	1.5 W
IM393-S6E/F	9 A	54 mΩ	1 W

5.1.3 Delay time

The RC filter is necessary in the over-current sensing circuit to prevent malfunction of OC protection caused by noise. The RC time constant is determined by applying time of noise and the withstand time capability of IGBT.

When the sensing voltage on the shunt resistor exceeds I_{TRIP} positive-going threshold ($V_{IT,TH+}$), this voltage is applied to the ITRIP pin of the IM393-XX via the RC filter. Table 13 shows the specification of the OC protection reference level. The filter delay time (T_{FILTER}) is caused by RC filter time constant, and the input voltage of I_{TRIP} pin rises to the I_{TRIP} positive threshold voltage during T_{FILTER}.

In addition there is the shutdown propagation delay of I_{TRIP}. Please refer to Table 14.

Table 13 Specification of OC protection reference level '$V_{IT,TH+}$'

Item	Min.	Typ.	Max.	Unit
I_{TRIP} positive going threshold $V_{IT,TH+}$	0.44	0.49	0.54	V

Table 14 Internal delay time of OC protection circuit

Item		Condition	Min.	Typ.	Max.	Unit
Shut down propagation delay (T_{ITRIP})	IM393-X6E/F	I_{out} = 10 A, from $V_{IT,TH+}$ to 10 % I_{out}	-	-	1.5	µs
	IM393-L6E/F	I_{out} = 7.5 A, from $V_{IT,TH+}$ to 10 % I_{out}	-	-	1.5	µs
	IM393-M6E/F	I_{out} = 5 A, from $V_{IT,TH+}$ to 10 % I_{out}	-	-	1.5	µs
	IM393-S6E/F	I_{out} = 3 A, from $V_{IT,TH+}$ to 10 % I_{out}	-	-	1.5	µs

Therefore the total time from over-current event to shut down of all six IGBTs is:

$$T_{TOTAL} = T_{FILTER} + T_{ITRIP} \quad (3)$$

Shut-down propagation delay is inversely proportional to the current range; therefore the T_{ITRIP} is reduced at higher current conditions than those in Table 14. The recommended total delay is less than the 3 µs of safety operation. Thus, the RC time constant should be set in the range of 1~1.5 µs. Recommended values for the filter components are R = 1.5 kΩ and C = 1 nF.

5.2 Fault output and auto-clear function

As described in the previous section, in the event of an over-current, the RFE pin will get low as the I_{TRIP} pin gets high when the open-drain MOSFET is turned on. When over-current conditions end, the open-drain MOSFET will be turned off, as illustrated in Figure 18. However, all IGBTs will remain off until RFE voltage can reach a positive-going threshold. This is called the fault auto-clear function, and is shown as $T_{FLT-CLR}$ in Figure 19.

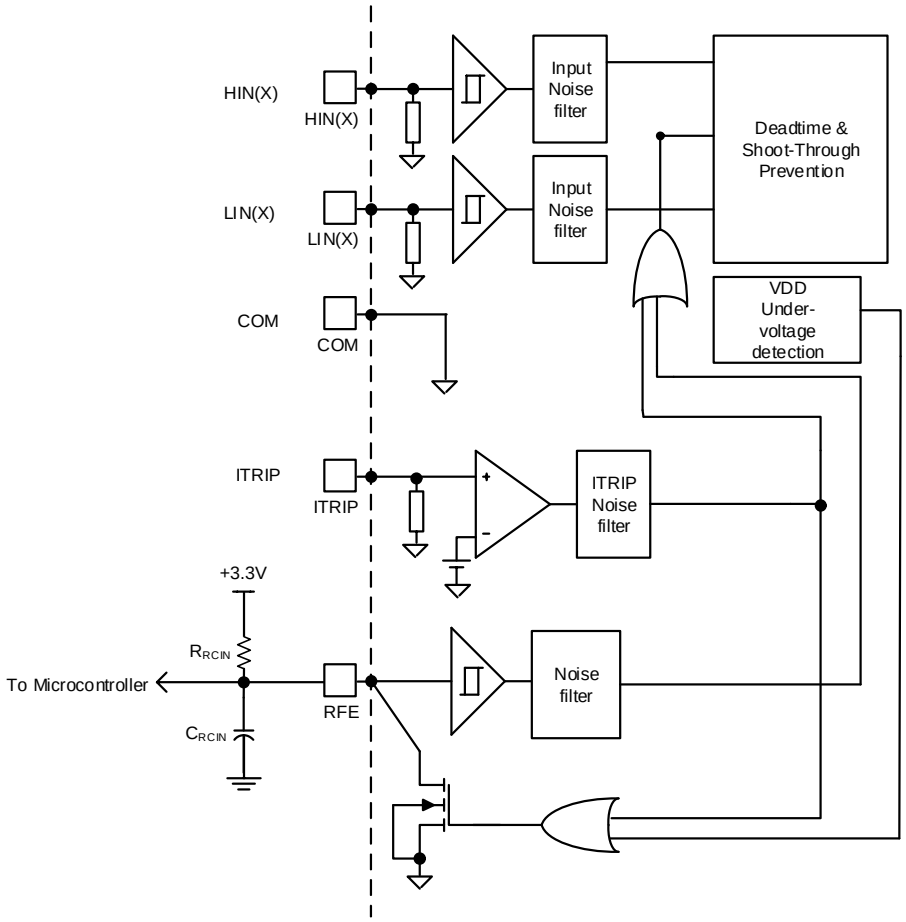

Figure 18 Internal block diagram of IM393-XX

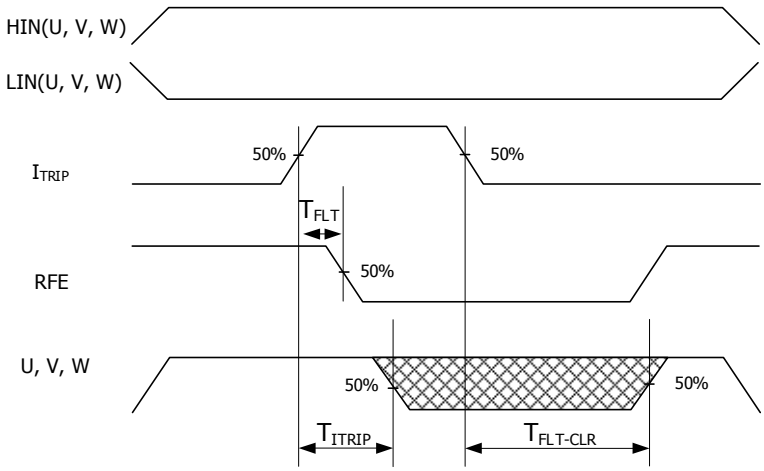

Figure 19 Input-output timing chart during short-circuit event

The $T_{FLT-CLR}$ can be determined by the below formula.

In the case of 3.3 V,

$$V_{RFE}(t) = 3.3\ V * (1 - e^{-t/RC}) \quad (4)$$

$$T_{FLT-CLR} = - R_{RCIN} * C_{RCIN} * \ln (1\text{-}V_{IN_TH+}/3.3\ V) \quad (5)$$

For example, if R_{RCIN} is 1.2 MΩ and C_{RCIN} is 1 nF, the $T_{FLT-CLR}$ is about 1.7 ms with V_{IN_TH+} of 2.5 V.

It is also important to note that C_{RCIN} needs to be minimized in order to make sure it is fully discharged in the event of over-current. Since the ITRIP pin has a 350 ns input filter, it is appropriate to ensure that C_{RCIN} will be discharged below V_{IN_TH-} by the open-drain MOSFET, after 350 ns. Therefore, the max C_{RCIN} can be calculated as:

$$V_{RFE}(t) = 3.3\ V * e^{-t/RC} < V_{IN_TH-} \quad (6)$$

$$C_{RCIN} < 350\ ns / (- \ln (V_{IN_TH-} / 3.3\ V) * R_{RFE_ON}) \quad (7)$$

Considering V_{IN_TH-} of 0.8 V and R_{RFE_ON} of 50 Ω, C_{RCIN} should be less than 4.9 nF.

In the case of 5 V,

$$V_{RFE}(t) = 5\ V * (1 - e^{-t/RC}) \quad (8)$$

$$T_{FLT-CLR} = - R_{RCIN} * C_{RCIN} * \ln (1-V_{IN_TH+}/5\ V) \quad (9)$$

For example, if R_{RCIN} is 1.2 MΩ and C_{RCIN} is 1 nF, the $T_{FLT-CLR}$ is about 0.8 ms with V_{IN_TH+} of 2.5 V.

The max C_{RCIN} can be calculated as:

$$V_{RFE}(t) = 5\ V * e^{-t/RC} < V_{IN_TH-} \quad (10)$$

$$C_{RCIN} < 350\ ns / (- \ln (V_{IN_TH-} / 5\ V) * R_{RFE_ON}) \quad (11)$$

Considering V_{IN_TH-} of 0.8 V and R_{RFE_ON} of 50 Ω, C_{RCIN} should be less than 3.8 nF.

As far as R_{RCIN} is concerned, it should be selected to achieve the desired $T_{FLT-CLR}$. Its value should not be too low to interfere with the discharging of C_{RCIN} in the case of over-current. Also it cannot be too high in order to ensure proper biasing of the RFE pin during normal operation. A resistor value between 0.5 MΩ and 2 MΩ is suggested to have a fault-clear time in the range of 1 ms.

It is critical that the PWM generator be disabled within the fault duration to guarantee a shutdown of the system, and the over-current condition must be cleared before resuming operation.

5.3 Undervoltage lockout (UVLO)

IM393-XX HVIC provides undervoltage lockout protection on both the V_{DD} (logic and low-side circuitry) power supply and the V_{BS} (high-side circuitry) power supply. Figure 20 is used to illustrate this concept. V_{DD} or V_{BS} is plotted over time, and as the waveform crosses the UVLO threshold ($V_{DDUV+/-}$ or $V_{BSUV+/-}$), the undervoltage protection is enabled or disabled.

Upon power-up, should the V_{DD} voltage fail to reach V_{DDUV+} threshold, the IC will not turn on. Additionally, if the V_{DD} voltage decreases below the V_{DDUV-} threshold during operation, the undervoltage lockout circuitry will recognize a fault condition, and shut down the high and low-side gate drive outputs. The RFE pin will then go to the low state to inform the controller of the fault condition.

Upon power-up, should the V_{BS} voltage fail to reach the V_{BSUV+} threshold, the IC will not turn on. Additionally, if the V_{BS} voltage decreases below the V_{BSUV-} threshold during operation, the undervoltage lockout circuitry will recognize a fault condition, and shut down the high-side gate drive outputs of the IC.

The UVLO protection ensures that the IC drives the power devices only when the gate supply voltage is sufficient to fully enhance the power devices. Without this feature, the power switch could be driven with a low gate voltage which results in excessive losses, as it conducts current while the channel impedance is high. When conduction losses are too high within the power switch, it could lead to power switch failure.

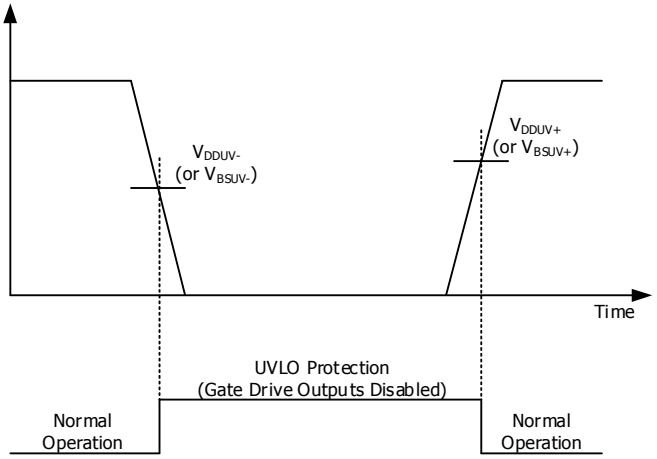

Figure 20 UVLO protection

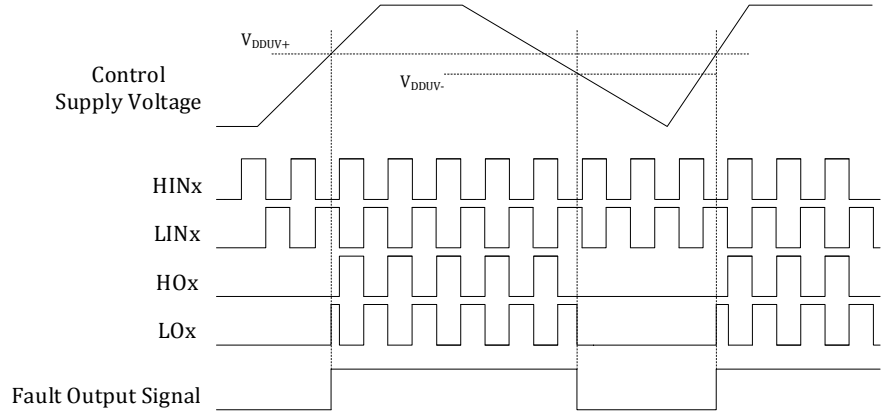

Figure 21 Timing chart of low-side undervoltage protection function

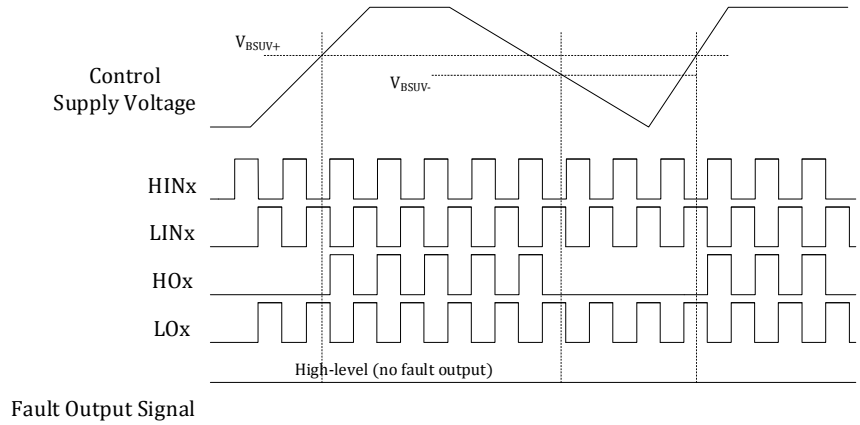

Figure 22 Timing chart of high-side undervoltage protection function

Table 15 IM393-XX functions versus control power supply voltage

Control voltage range [V]	IM393-XX function operations
0 ~ 4	Control IC is not operating. Undervoltage lockout function is not working and fault output signal is not provided.

4 ~ 11.2	As the undervoltage lockout function is activated, control input signals are blocked, and a fault signal VFO is generated.
11.2 ~ 13.5	IGBTs will be operated in accordance with the control gate input. Driving voltage is below the recommended range, so $V_{CE(sat)}$ and the switching losses will be larger than under normal conditions. High-side IGBTs cannot operate after V_{BS} initial charging, as V_{BS} cannot reach V_{BSUV+}.
13.5 ~ 16.5 for VDD 12.5 ~ 17.5 for VBS	Normal operation. This is the recommended operating condition. V_{DD} of 15 V is recommended when only integrated bootstrap circuitry is used.
16.5 ~ 20 for VDD 17.5 ~ 20 for VBS	IGBTs are still in operation. Because driving voltage is above the recommended range, IGBTs' switching is faster. It causes increased system noise. And peak short-circuit current might be too large for proper operation of the short-circuit protection.
Over 20	Control circuit in the IM393-XX might be damaged.

5.4 Over-temperature protection

IM393-XX have V_{TH} pins for temperature-sensing. Figure 23 shows internal thermistor-resistance characteristics according to the thermistor temperature. For over-temperature protection, a circuitry is introduced in this section. As shown in Figure 24, the V_{TH} pin is connected directly to the ADC terminal of the microcontroller. This circuit is very simple, and the six IGBTs have to be shut down by a command issued from the microcontroller.

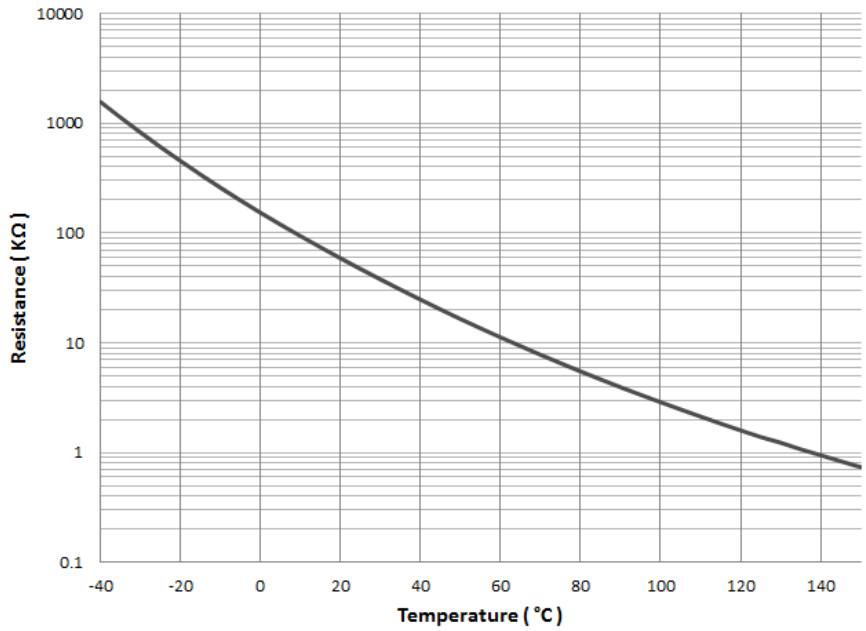

Figure 23 Internal thermistor-resistance characteristics according to thermistor temperature

NTC resistance can be translated to a voltage that can be read by the microcontroller using external resistance R1. For example, when R1 is 2 kΩ, then VFO at about 100°C of the thermistor temperature is 2.95 V_{typ} at V_{ctr} = 5 V and 1.95 V at V_{ctr} = 3.3 V, as shown in Figure 25.

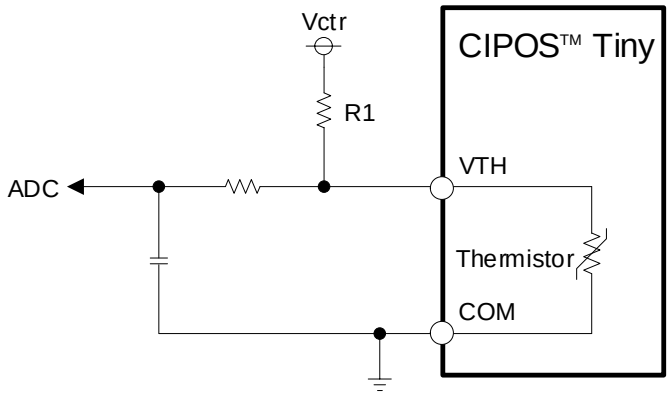

Figure 24 Circuit proposals for over-temperature protection

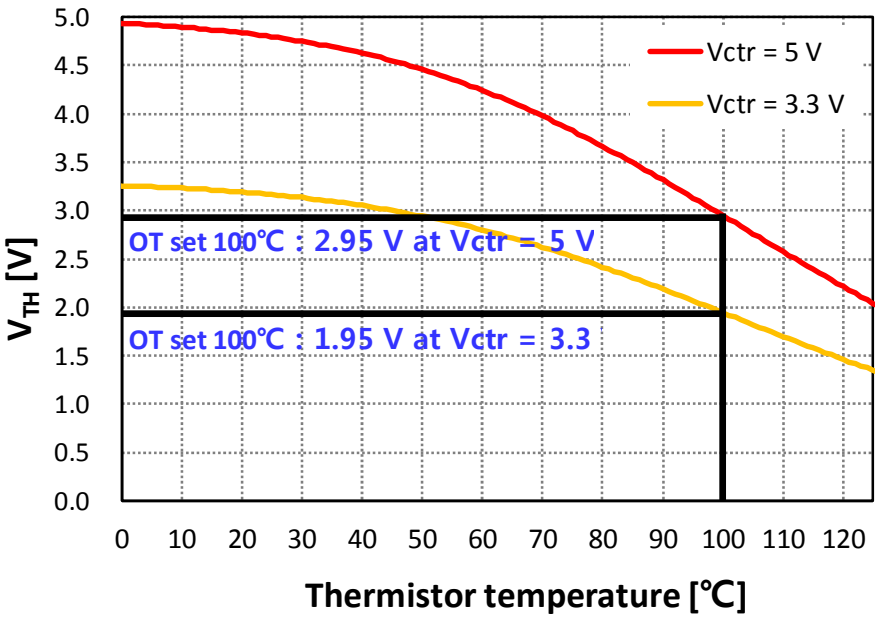

Figure 25 Voltage of V_{TH} pin according to thermistor temperature

6 Bootstrap circuit

6.1 Bootstrap circuit operation

The V_{BS} voltage, which is the voltage difference between $V_{B\,(U,V,W)}$ and $V_{S\,(U,V,W)}$, provides the supply to the IC within the IM393-XX. This supply voltage must be in the range of 12.5~17.5 V to ensure that the IC can fully drive the high side IGBT. IM393-XX includes an under-voltage detection function for the V_{BS} to ensure that the IC does not drive the high-side IGBT if the V_{BS} voltage drops below a specified voltage (section 5.3).

Internal bootstrap circuitry is integrated inside the HVIC. It consists of three high-voltage MOSFETs that eliminate the need for an external circuitry (diodes + resistors). There is one MOSFET for each high-side output channel, which is connected between the V_{DD} supply and its respective floating supply ($V_{B(U)}$, $V_{B(V)}$, $V_{B(W)}$), as shown in Figure 26. The integrated bootstrap MOSFET is turned ON only when the low-side output (LO) is “HIGH”, and has a limited source-current due to R_{BS}. The V_{BS} voltage will be charged each cycle depending on the time of LO and the value of the C_{BS} capacitor, the collector-emitter drop of external IGBT and the low-side freewheeling diode drop.

The bootstrap MOSFET of each channel follows the state of respective low-side output stage unless the V_B voltage is higher than approximately 110% of V_{DD}. In that case, the bootstrap MOSFET is designed to remain OFF until V_B returns below that threshold. This concept is illustrated in Figure 27.

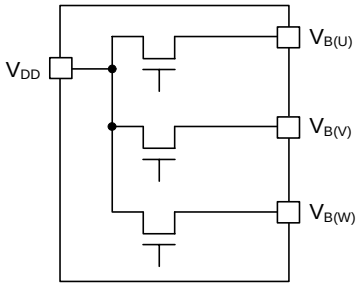

Figure 26 Internal bootstrap MOSFET connections

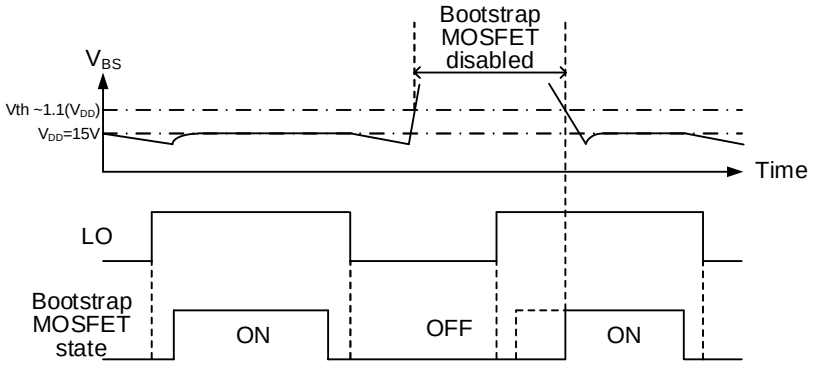

Figure 27 Bootstrap MOSFET state diagram

A bootstrap MOSFET is suitable for most of the PWM modulation schemes, and can be used either in parallel with an external bootstrap network or as a replacement of it. The use of the integrated bootstrap as a replacement of the external bootstrap network may have some limitations however. An example of this limitation may arise when this functionality is used in non-complementary PWM schemes and at very high PWM duty cycle. In these cases, superior performance can be achieved by using an external bootstrap diode and resistor in parallel with the internal bootstrap network.

Table 16 Electrical characteristics of internal bootstrap parameters

Item	Symbol	Value			Unit
		Min.	Typ.	Max.	
Bootstrap resistance	R_{BS}	-	200	-	Ω

6.2 Initial charge of bootstrap capacitor

Adequate on-time duration of the low-side IGBT to fully charge the bootstrap capacitor is required for initial bootstrap charging. The bootstrap capacitor needs to be pre-charged in order to limit peak current and power through the resistor. The initial charging time (t_{charge}) can be calculated with the following equation:

$$t_{charge} \geq C_{BS} \times R_{BS} \times \frac{1}{\delta} \times \ln\left(\frac{V_{DD}}{V_{DD} - V_{BS(min)} - V_{FD} - V_{LS}}\right) \quad (12)$$

- V_{FD} = Forward voltage drop across the bootstrap diode
- $V_{BS(min)}$ = The minimum value of the bootstrap capacitor voltage
- V_{LS} = Voltage drop across the low-side IGBT
- δ = Duty ratio of PWM

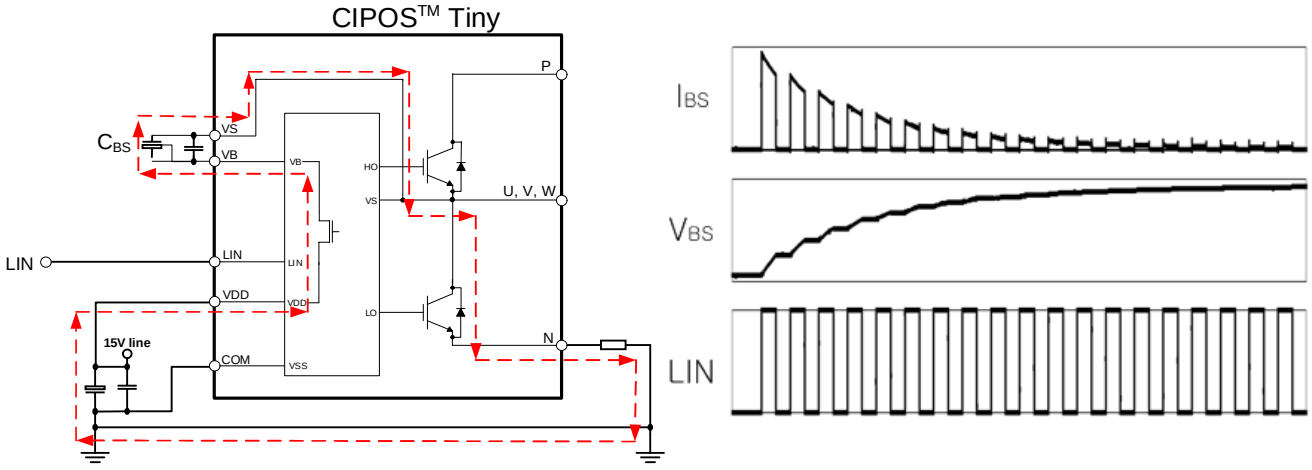

(a) Bootstrap circuit (b) Timing chart of initial bootstrap charging

Figure 28 Bootstrap circuit operation and initial charging

6.3 Bootstrap capacitor selection

The bootstrap capacitance can be calculated by:

$$C_{BS} = \frac{I_{leak} \times \Delta t}{\Delta V} \quad (13)$$

- Whereby,
- Δt = maximum ON pulse width of high-side IGBT
- ΔV = the allowable discharge voltage of the C_{BS}.

- I_{leak}= maximum discharge current of the C_{BS} mainly via the following mechanisms:
  - Gate charge for turning on the high-side IGBT
  - Quiescent current to the high-side circuit in the IC
  - Level-shift charge required by level shifters in the IC
  - Leakage current in the bootstrap diode
  - C_{BS} capacitor leakage current (ignored for non-electrolytic capacitors)
  - Bootstrap diode reverse-recovery charge

In practice, a leakage current of 1mA is recommended as a calculation basis for IM393-XX. By taking into consideration dispersion and reliability, the capacitance is generally selected to be 2 to 3 times higher than the calculated one. The C_{BS} is only charged when the high-side IGBT is off, and the VS voltage is pulled down to ground. Therefore, the on-time of the low-side IGBT must be sufficient to ensure that the charge drawn from the C_{BS} capacitor can be fully replenished. Hence, there is inherently a minimum on-time of the low-side IGBT (or off-time of the high-side IGBT).

The bootstrap capacitor should always be placed as close to the IM393-XX pins as possible. At least one low ESR capacitor should be used to provide good local de-coupling. For example, a separate ceramic capacitor close to IM393-XX is essential, if an electrolytic capacitor is used for the bootstrap capacitor. If the bootstrap capacitor is either a ceramic or tantalum type, it should be adequate for local decoupling.

6.4 Charging and discharging of the bootstrap capacitor during PWM inverter operation

The bootstrap capacitor C_{BS} charges through the bootstrap MOSFET from the V_{DD} supply when the high-side IGBT is off, and the V_S voltage is pulled down to ground. It discharges when the high-side IGBT or diode are on.

Example: Selection of the initial charging time

An example of the calculation of the minimum value of the initial charging time

Conditions:

- C_{BS} = 4.7 µF, R_{BS} = 200 Ω, Duty Ratio (δ)= 0.5, V_{DD} = 15 V,
- $V_{BS\,(min)}$ = 12.5 V, V_{LS} = 0.1 V
- $t_{charge} \geq 4.7\mu F \times 200\ \Omega \times \frac{1}{0.5} \times \ln\left(\frac{15\ V}{15\ V - 12.5\ V - 0.1\ V}\right) \cong 3.4ms$

In order to ensure safety, it is recommended that the charging time be at least three times longer than the calculated value.

Example 2: The minimum value of the bootstrap capacitor

Conditions:

ΔV=0.1 V, I_{leak}=1 mA

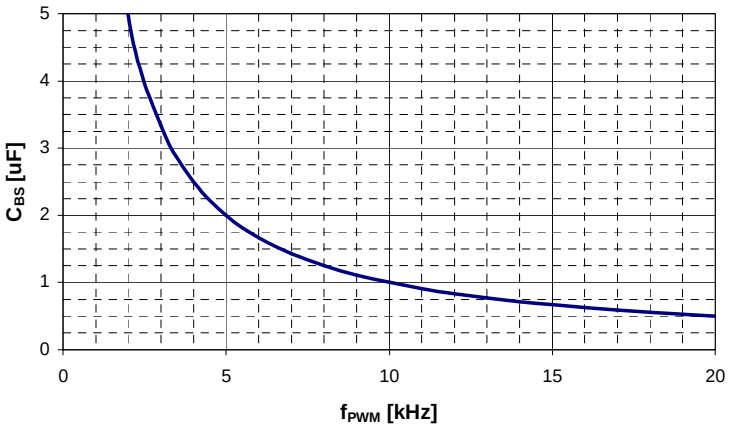

Figure 29 Bootstrap capacitance as a function of the switching frequency

Figure 29 shows the curve for a continuous sinusoidal modulation. If the voltage ripple is 0.1 V, the recommended bootstrap capacitance is therefore in the range of 4.7 µF for most switching frequencies. In case of other PWM method like a discontinuous sinusoidal modulation, the t_{charge} must be set to the longest period of the low-side IGBT off-state.

Note that this result is only an example. It is recommended that the system design considers the actual control pattern and lifetime of the used components.

7 Thermal design

7.1 Introduction

Thermal design is a key issue for the IM393-XX that is to be built into in electronic systems such as drives. In order to avoid overheating and/or to increase reliability, two design criteria are of importance:

- Low power losses
- Low thermal resistance from junction to ambient

The first criterion has already been fulfilled if users have chosen IM393-XX as an intelligent power module for their application. To get the most out of the system, the selection of a proper heat sink is also necessary. A good thermal design allows users to maximize the power or increase the reliability of the system by reducing the maximum temperature. This application note gives a short introduction to power losses and heat sinks, helping users to understand the mode of operation and to find the right heat sink for their specific application.

For the thermal design, the user requires the following data:

- The maximum power losses $P_{sw,i}$ of each power switch
- The maximum junction temperature $T_{J,max}$ of the power semiconductors
- The junction-to-ambient thermal impedance $Z_{th,J-A}$. For steady-state conditions, static thermal resistance $R_{th,J-A}$ is sufficient. This thermal resistance comprises the junction-to-case thermal resistance $R_{th,J-C}$ as provided in datasheets, the case-to-heat sink thermal resistance $R_{th,C-HS}$ accounting for the heat flow through the thermal interface material between heat sink and the power module, and the heat sink-to-ambient thermal resistance $R_{th,HS-A}$. Each thermal resistance can be extended to its corresponding thermal impedance by adding the thermal capacitances.
- The maximum allowable ambient temperature $T_{A,max}$
- Furthermore all heat flow paths need to be identified.

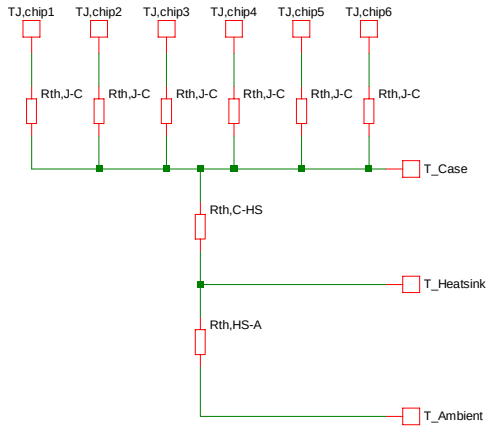

Figure 30 Simplified thermal equivalent circuit

This circuit is simplified, as it omits thermal capacitances and typically negligible heat paths such as the heat transfer from the module surface directly to the ambient via convection and radiation.

7.2 Power losses

The total power losses in the IM393-XX are composed of conduction and switching losses in the IGBTs and diodes. The loss during the turn-off steady state can be ignored, as it is very low and has little effect on increasing the temperature in the device. The conduction loss depends on the DC electrical characteristics of the device, i.e. saturation voltage. Therefore, it is a function of the conduction current and the device's junction temperature. The switching loss, however, is determined by dynamic characteristics such as turn-on/off time and over-voltage/current. Hence, in order to obtain accurate switching losses, the DC-link voltage of the system, the applied switching frequency, the power circuit layout, and the current and temperature should be considered.

In this chapter, detailed equations are shown to calculate both losses of the IM393-XX based on a PWM-inverter system for motor-control applications. They apply to the case in which three-phase continuous sinusoidal PWMs are adopted. For other cases, like three-phase discontinuous PWMs, please refer to [4].

7.2.1 Conduction losses

The typical characteristics of forward-drop voltage are approximated by the following linear equation for the IGBT and the diode, respectively.

$$V_{IGBT} = V_I + R_I \cdot i$$
$$V_{DIODE} = V_D + R_D \cdot i \quad (14)$$

- V_I = Threshold voltage of IGBT
- V_D = Threshold voltage of monolithic body diode
- R_I = On-state slope resistance of IGBT
- R_D = On-state slope resistance of monolithic body diode

Assuming that the switching frequency is high, the output current of the PWM-inverter can be assumed to be sinusoidal. That is,

$$i = I_{peak}\cos(\theta - \varphi) \quad (15)$$

Where, φ is the phase-angle difference between output voltage and current. Using the previous equations, the conduction loss of one IGBT and its monolithic body diode can be obtained as follows.

$$P_{con.I} = \frac{1}{2\pi}\int_0^{\pi} \xi(V_{IGBT} \times i)d\theta = \frac{I_{peak}}{2\pi}V_I + \frac{I_{peak}}{8}V_I MI\cos\varphi + \frac{I_{peak}^2}{8}R_I + \frac{I_{peak}^2}{3\pi}R_I MI\cos\varphi \quad (16)$$

$$P_{con.D} = \frac{1}{2\pi}\int_0^{\pi} (1-\xi)(V_{DIODE} \times i)d\theta = \frac{I_{peak}}{2\pi}V_D - \frac{I_{peak}}{8}V_D MI\cos\varphi + \frac{I_{peak}^2}{8}R_D - \frac{I_{peak}^2}{3\pi}R_D MI\cos\varphi \quad (17)$$

$$P_{con} = P_{con.I} + P_{con.I} \quad (18)$$

Where ξ is the duty cycle in the specified PWM method.

$$\xi = \frac{1 + MI\cos\theta}{2} \quad (19)$$

Where, MI is the PWM modulation index defined as the peak phase voltage divided by half of the DC-link voltage.

It should be noted that the total inverter conduction losses are six times that of the P_{con}.

7.2.2 Switching losses

Different devices have different switching characteristics, and vary according to the handled voltage/current and operating temperature/frequency. However, the turn-on/off energy loss (joule) can be experimentally measured, indirectly, by integrating power over time where power is obtained by multiplying the current and voltage, under a given circumstance. Therefore, the linear dependency of the switching energy loss on the switched current is expressed during one switching period as follows.

$$\text{Switching energy loss} = (E_I + E_D) \times i\ [joule] \tag{20}$$

$$E_I = E_{I.ON} + E_{I.OFF} \tag{21}$$

$$E_D = E_{D.ON} + E_{D.OFF} \tag{22}$$

Where, E_I is a unique constant of IGBT related to the switching energy, and different IGBTs have different E_I values. E_D is for the diode. These should be derived by experimental measurement. From the equation (15), it should be noted that the switching losses are a linear function of current and directly proportional to the switching frequency.

As mentioned before, the output current can be considered a sinusoidal waveform, and the switching loss occurs every PWM period for the continuous PWM schemes. Therefore, depending on the switching frequency f_{sw}, the switching loss of one device is:

$$P_{sw} = \frac{1}{2\pi}\int_0^{\pi} (E_I + E_D)\, i\, f_{sw}\, d\varphi = \frac{(E_I + E_D) f_{sw} I_{peak}}{\pi} \tag{23}$$

7.3 Thermal impedance

During operation, power losses generate heat which elevates the temperature in the semiconductor junctions. This limits the performance and the lifetime of the device. As junction temperature increases, the operation characteristics of a device are altered from the normal state, and the failure rate increases exponentially. This makes the thermal design of the package a very important factor in the device development stage and also in the application field. The generated heat must be properly conducted away from the power chips and into the environment using an adequate cooling system.

Thermal impedance qualifies the capability of a given thermal path to transfer heat in the steady state.

$$Z_{TH}(t) = \frac{\Delta T(t)}{\Delta P}$$

The thermal impedance is typically represented by an RC equivalent circuit as shown in Figure 31.

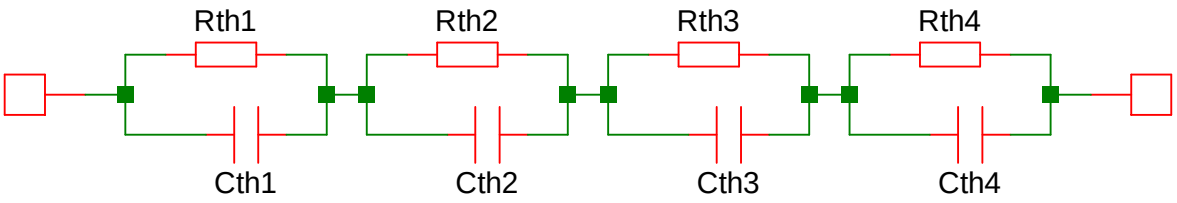

Figure 31 Thermal impedance RC equivalent circuits (Foster model)

Figure 32 shows thermal impedance from junction-to-case curves of IM393-M6F. The thermal resistance goes into saturation in about 10 seconds. Other types of IM393-XX also show similar characteristics.

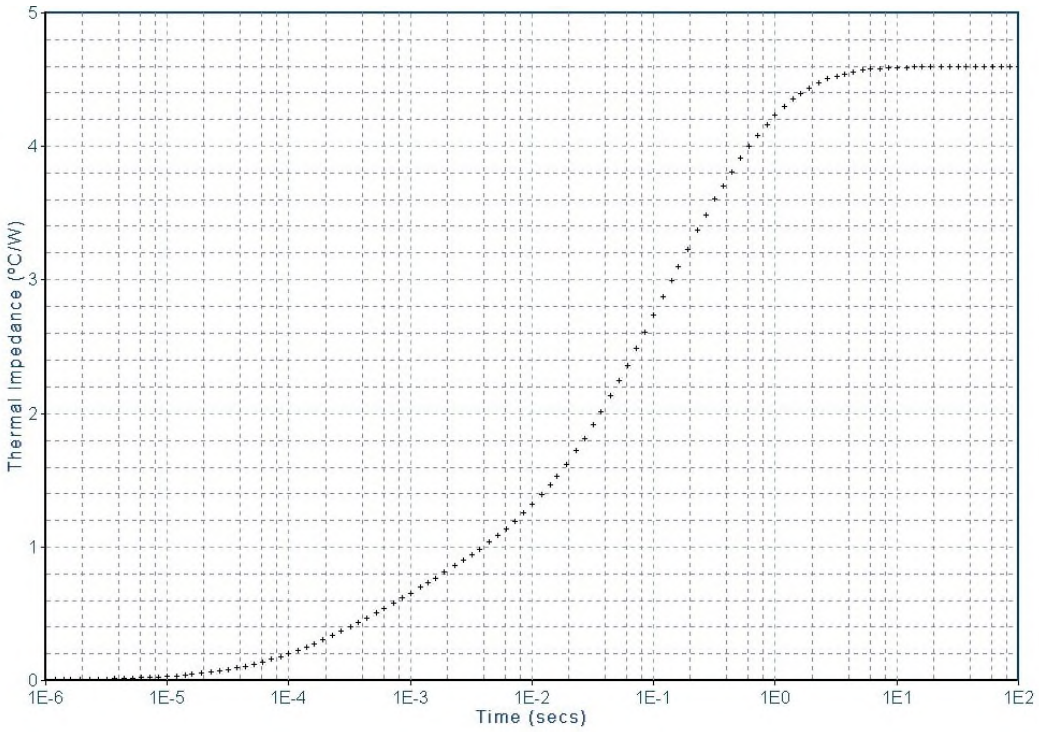

Figure 32 Thermal impedance curve of IM393-M6F

7.4 Temperature rise considerations and calculation example

The simulator PLECS allows users to estimate power losses and temperature profiles for a constant case temperature. The result of loss calculation using the typical characteristics is shown in Figure 33 as "max RMS output current versus carrier frequency". These curves, functions of the motor drive topology and control scheme, are simulated under the following conditions:

PWM	Vbus	Vout	pf	fmod	Tcase
Sine	320 V	155 V	0.6	60 Hz	100 °C

Figure 33 shows an example of an inverter operated at T_C = 100°C. It indicates the maximum current managed by IM393-XX in safety conditions, when the junction temperature rises to the maximum junction temperature of 150°C.

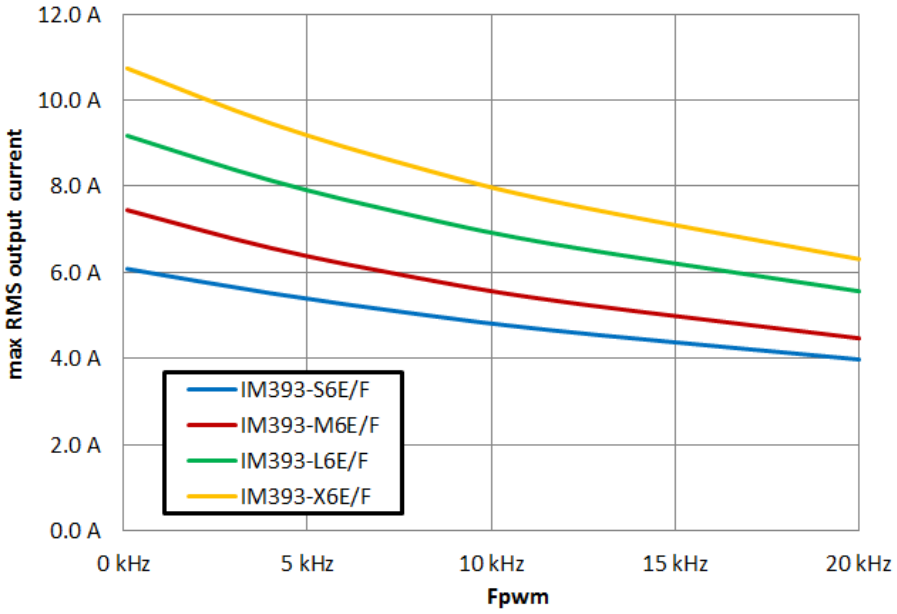

Figure 33 Max RMS output current versus carrier frequency at T_J = 150°C [5]

Under sinusoidal modulation, the power loss has to be calculated in each switching cycle, as the device current changes within half-modulation cycle, as illustrated in Figure 34. The upper portion is the high-side IGBT current which is used to calculate E_{ON}, E_{OFF} of IGBT. The lower portion in Figure 34 is the low-side diode current for E_{RR}.

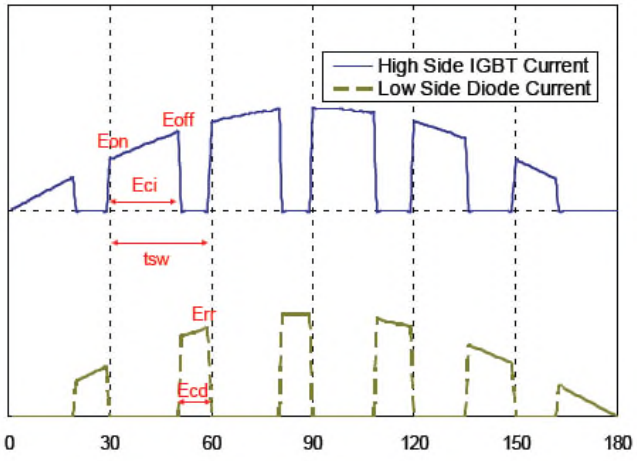

Figure 34 Loss calculation of sinusoidal modulation

Because the loss is not constant over time, its shape depends on current waveforms and device parameters. Figure 35 illustrates the power loss of the IGBT in a typical case.

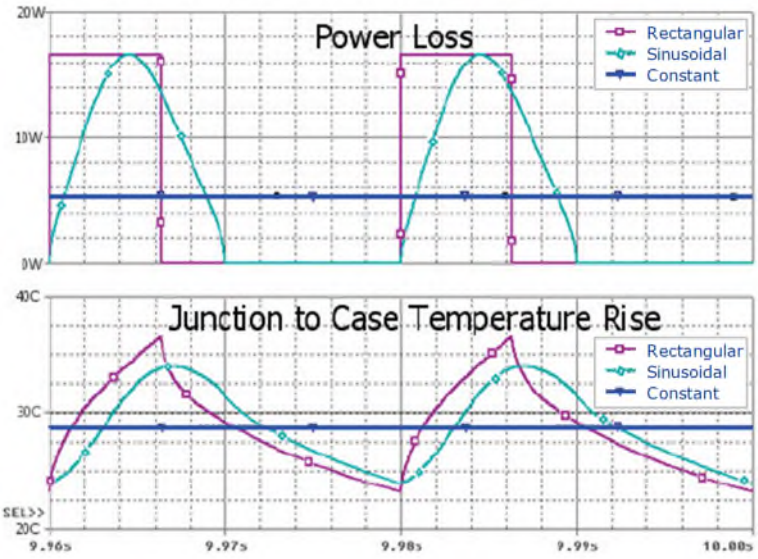

Figure 35 Junction temperature calculation under sinusoidal modulation

7.5 Heat sink selection guide

7.5.1 Required heat sink performance

If the power losses $P_{sw,i}$, $R_{th,J\text{-}C}$ and the maximum ambient temperature are known, the required thermal resistance of the heat sink and the thermal interface material can be calculated according to Figure 31 from,

$$T_{J,max} = T_{A,max} + \sum_i P_{sw,i} \cdot R_{th,HS-A} + \sum_i P_{sw,i} \cdot R_{th,C-HS} + Max(P_{sw,i} \cdot R_{th,JC,i}) \quad (24)$$

For three-phase bridges one can simply assume that all power switches dissipate the same power and have the same $R_{th,J\text{-}C}$. This leads to the required thermal resistance from case to ambient.

$$R_{th,C-A} = R_{th,C-HS} + R_{th,HS-A} = \frac{T_{J,max} - P_{sw} \cdot R_{th,JC} - T_{A,max}}{\sum P_{sw}} \quad (25)$$

For example, the power switches of a washing machine drive dissipate 3.5 W maximum each, the maximum ambient temperature is 50°C, the maximum junction temperature is 150°C and $R_{th,jC}$ is 3 K/W. It results in,

$$R_{th,C-A} \leq \frac{150\,°C - 3.5\,W \cdot 3\frac{K}{W} - 50\,°C}{6 \cdot 3.5\,W} = 4.3\frac{K}{W}$$

If the heat-sink temperature shall be limited to 100°C, an even lower thermal resistance is required:

$$R_{th,C-A} \leq \frac{100\,°C - 50\,°C}{6 \cdot 3.5\,W} = 2.4\frac{K}{W}$$

Smaller heat sinks with higher thermal resistances may be acceptable if the maximum power is only required for a short time (times below the time constant of the thermal resistance and the thermal capacitance). However, this requires a detailed analysis of the transient power and temperature profiles. The larger the heat sink, the larger its thermal capacitance, hence, the longer it takes to heat up the heat sink.

7.5.2 Heat sink characteristics

Heat sinks are characterized by three parameters:

- Heat transfer from the power source to heat sink
- Heat transfer within the heat sink (to all the surfaces of the heat sink)
- Heat transfer from heat sink surfaces to ambient

7.5.2.1 Heat transfer from heat source to heat sink

There are two factors that need to be considered in order to provide a good thermal contact between power source and heat sink:

- **Flatness of the contact area**
  - Due to the unevenness of surfaces, thermal interface material needs to be supplied between heat source and heat sink. However, such materials have a rather low thermal conductivity (<10 K/W). Hence, these materials should be as thin as possible. On the other hand, they need to fill up the space between heat source and heat sink. Therefore, the unevenness of the heat sink should be as low as possible. In addition, the particle size of the interface material must fit the roughness of the module and the heat sink surfaces. Particles that are too large will unnecessarily increase the thickness of the interface layer, and hence will increase thermal resistance. Particles that are too small will not provide a good contact between the two surfaces, and will lead to higher thermal resistance as well.
- **Mounting pressure**
  - The higher the mounting pressure, the better the interface material disperses. Excess interface material will be squeezed out resulting in a thinner interface layer with lower thermal resistance.

7.5.2.2 Heat transfer within the heat sink

The heat transfer within the heat sink is mainly determined by:

- **Heat-sink material**
  - The material needs to be a good thermal conductor. Most heat sinks are made of aluminum ($\lambda \approx 200$ W/ (m*K)). Copper is heavier and more expensive, but also nearly twice as efficient ($\lambda \approx 400$ W/ (m*K)).
- **Fin thickness**
  - If the fins are too thin, the thermal resistance from heat source to fin is too high, and the efficiency of the fin decreases. Hence, it does not make sense to make the fins as thin as possible to increase the surface area.

7.5.2.3 Heat transfer from heat sink surface to ambient

The heat transfers to the ambient mainly by convection. The corresponding thermal resistance is defined as

$$R_{th,conv} = \frac{1}{\alpha \cdot A} \tag{26}$$

Where α is the heat transfer coefficient and A is the surface area.

Hence there are two important parameters:

- **Surface area:** Heat sinks require a huge surface area in order to easily transfer the heat to the ambient. However, as the heat source is assumed to be concentrated at a point and not uniformly distributed, the total thermal resistance of a heat sink does not change linearly with length. Also, increasing the surface area by

increasing the number of fins does not necessarily reduce the thermal resistance as discussed in section **Error! Reference source not found.**.

- **Heat transfer coefficient (aerodynamics):** This coefficient is strongly depending on the air flow velocity as shown in Figure 36. If there is no externally induced flow, one speaks of natural convection, otherwise it is called forced convection. Heat sinks with very small fin spacing are not good for air flow. If a fan is used, the fin gap may be smaller than for natural convection, as the fan forces the air through the space between the fins.

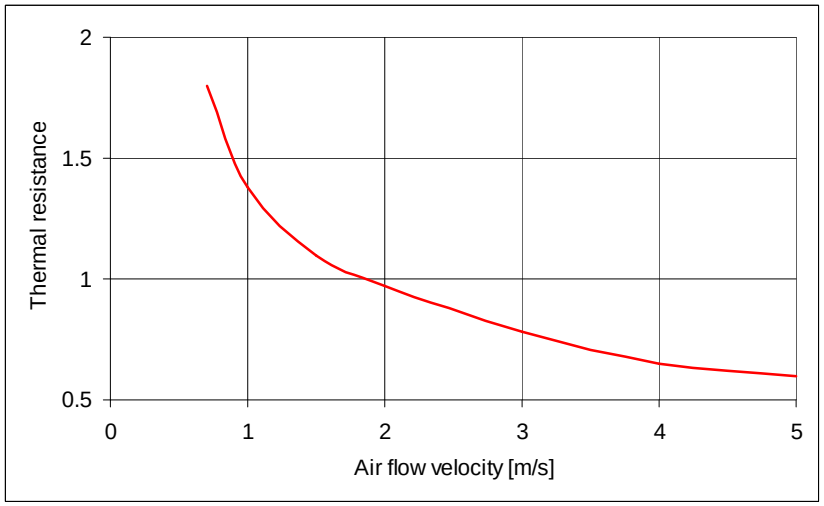

Figure 36 Thermal resistance as a function of the air flow velocity

Furthermore, in the case of natural convection, the heat sink efficiency depends on the temperature difference of heat sink and ambient (i.e. on the dissipated power). Some manufacturers, like Aavid thermalloy, provide a correction table which allows users to calculate thermal resistance depending on the temperature difference. Figure 37 shows the heat sink efficiency degradation for natural convection, as provided in the previous equation [6]. Please note that the thermal resistance is 25 % higher at 30 W than at 75 W.

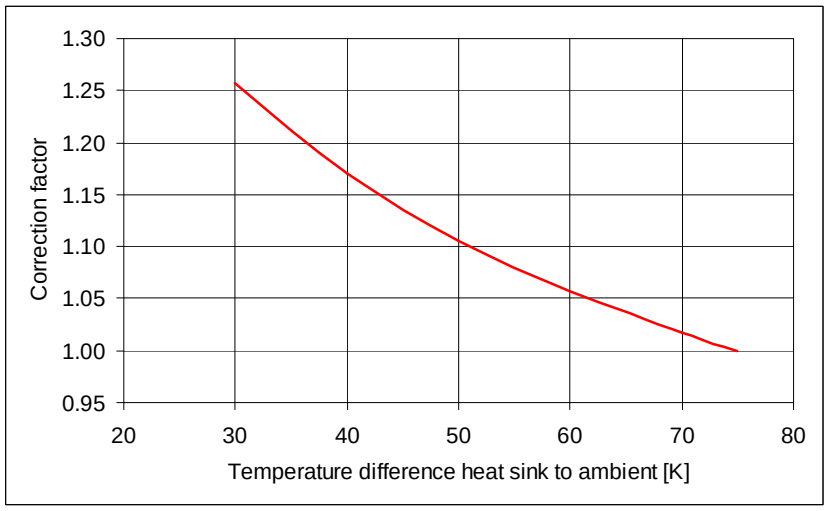

Figure 37 Correction factors for temperature

The positioning of the heat sink also plays an important role for aerodynamics. In the case of natural convection, the best mounting position is with vertical fins, as the heated air tends to move upwards due to buoyancy. Furthermore, one should make sure that there are no significant obstructions impeding the air flow.

Radiation occurs as well supporting the heat transfer from heat sink to ambient. In order to increase radiation one can use anodized heat sinks with a black surface. However, this decreases the thermal resistance of the heat sink only by a few percent in the case of natural convection. Radiated heat is negligible in the case of forced convection. Hence, black heat sinks can be used if no fan is used with the heat sink.

The discussion in this section clearly show there cannot be a single thermal resistance value assigned to a certain heat sink.

7.5.3 Selecting a heat sink

Unfortunately there are no straightforward recipes for selecting heat sinks. Finding a sufficient heat sink will include an iterative process of choosing and testing heat sinks. In order to get a first rough estimation of the required volume of the heat sink, one can start with estimated volumetric thermal resistances, as given in Table 17 (Taken from [7]). This table provides only first evidence, as the actual resistance may vary depending on many parameters such as actual dimensions, type and orientation.

Table 17 Electrical characteristics of internal bootstrap parameters

Flow conditions [m/s]	**Volumetric resistance [cm³ °C/W]**
Natural convection	500 ~ 800
1.0	150 ~ 250
2.5	80 ~ 150
5.0	50 ~ 80

One can roughly assume that the volume of a heat sink needs to be quadrupled in order to half its thermal resistance. This gives an idea whether natural convection is sufficient for the available space, or if forced convection is required.

In order to find an optimized heat sink for a given application, one needs to contact heat sink manufacturers or consultants. Further tips and references can be found in [7].

When contacting heat sink manufacturers to find a suitable heat sink, please ensure that the conditions for the specified thermal resistance values apply. These might be given either for a point source or for a heat source which is evenly distributed over the entire base area of the heat sink. Also ensure that the fin spacing is optimized for the corresponding flow conditions.

7.6 Online simulation tool

Infineon has developed an online simulation tool based on PLECS™ to help designers select the proper module that fits their system. The online tool can be found at: https://plex.infineon.com/plexim/ipmmotor.html

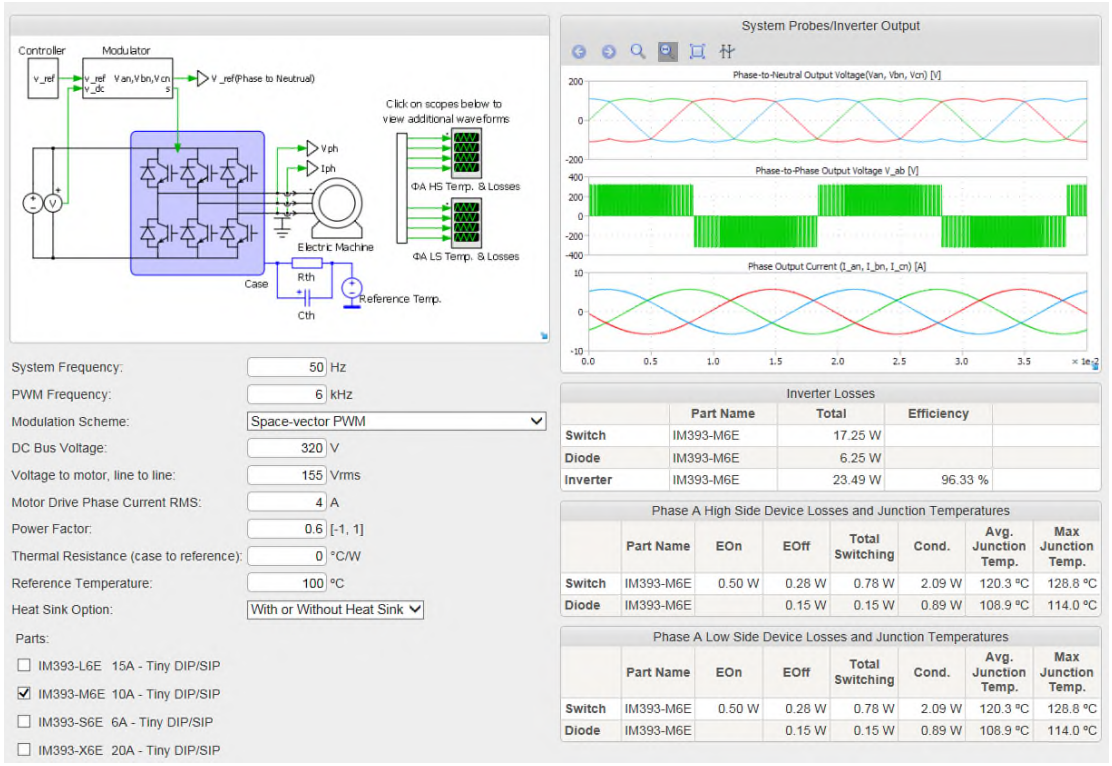

Figure 38 Motor drive with fixed case temperature

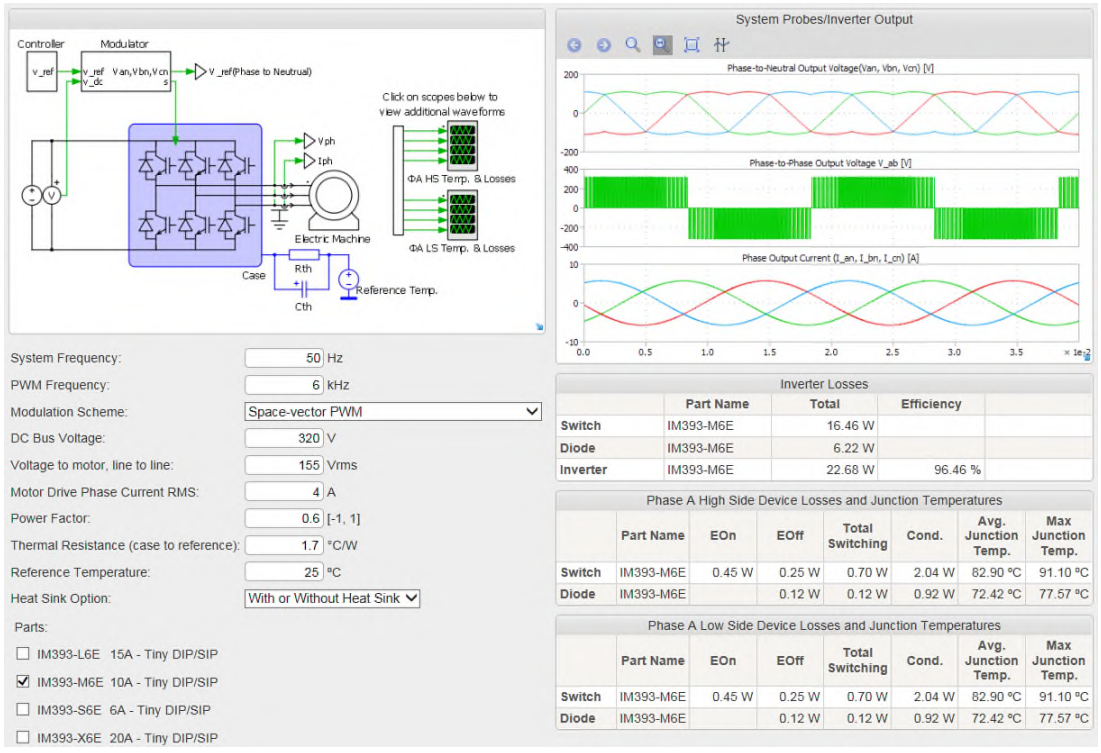

Figure 39 Motor drive with fixed heat sink characteristics

8 Heat sink mounting and handling guidelines

8.1 Heat sink mounting

8.1.1 General guidelines

An adequate heat-sinking capability of the IM393-XX is only achievable if it is suitably mounted. This is the fundamental requirement for meeting the electrical and thermal performance of the module. The following general points should be observed when mounting IM393-XX on a heat sink. Verify the following points related to the heat sink:

a) There should be no burrs on aluminum or copper heat sinks.
b) Screw holes should be countersunk.
c) There should be no unevenness or scratches in the heat sink.
d) The surface of the module should be completely in contact with the heat sink.
e) There should be no oxidation, stain or burrs on the heat-sink surface.

To improve the thermal conductivity, apply silicone grease to the contact surface between the IM393-XX and heat sink. Spread a homogenous layer of silicone grease with a thickness of 100 µm over the IM393-XX substrate surface. Non-planar surfaces of the heat sink may require a thicker layer of thermal grease. Please refer here to the specifications of the heat-sink manufacturer. It is important to note here that the heat sink covers the complete backside of the module. Functional behavior may differ when part of the backside of the module is not in contact with the heat sink.

To prevent a loss of heat dissipation effect due to warping of the substrate, tighten down the mounting screws gradually and sequentially while maintaining a left/right balance in pressure applied.

The design of the application PCB must ensure that the plane of the back side of the module and the plane of the heat sink are parallel in order to achieve minimal tension of the package and an optimal contact of the module with the heat sink. Please refer to the mechanical specifications of the module given in the datasheets.

It is the basics of good engineering to verify the function and thermal conditions by means of detailed measurements. It is best to use a final application inverter system, which is assembled in the final production process. This helps to achieve high-quality applications.

8.1.1.1 Recommended tightening torque

As shown in Table 18, the tightening torque of M3 screws is specified for typically mounting torque = 0.7N·m and maximum mounting torque = 0.8N·m. The screw holes must be centered to the screw openings of the mold compound, so that the screws do not come into contact with the mold compound. The use of washers is advised for better pressure and contact distribution. If an insulating sheet is used, use a sheet larger than the IPM, which should be aligned accurately when attached. It is important to ensure that no air is enclosed by the insulating sheet. Generally speaking, insulating sheets are used in the following cases:

- When the ability of withstanding primary and secondary voltages is required to achieve required safety standards.
- When the IPM is to be insulated from the heat sink.
- When measuring the module, to reduce radiated noise, or eliminate other signal-related problems.

Table 18 Mechanical characteristics and ratings

Item	Condition	Limits			Unit
		Min.	Typ.	Max.	
Mounting torque	Mounting screw : M3	0.6	0.7	0.8	N·m
Curvature of module backside	(Note Figure 40)	0	-	150	µm

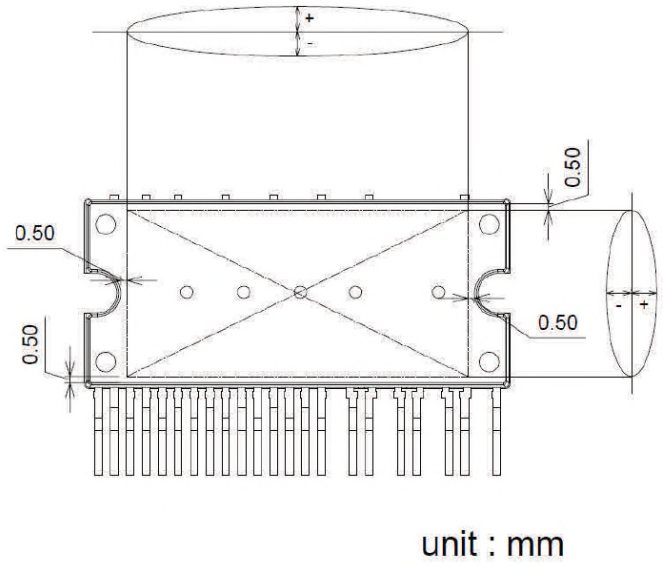

Figure 40 Backside curvature measurement position

8.1.1.2 Screw tightening to heat sink

The tightening of the screws is the main process of attaching the module to the heat sink. It is recommended that M3 screws are used in conjunction with a spring washer and a plain washer. The spring washer must be assembled between the plain washer and the screw head. The screw torque must be monitored by the fixing tool.

Tightening process:

- Align module with the fixing holes
- Insert screw A with washers and do pre-screwing
- Insert screw B with washers and do pre-screwing
    - Note: The pre-screwing torque is set to 20~30 % of maximum torque rating.
- Tighten screw A to final torque
- Tighten screw B to final torque

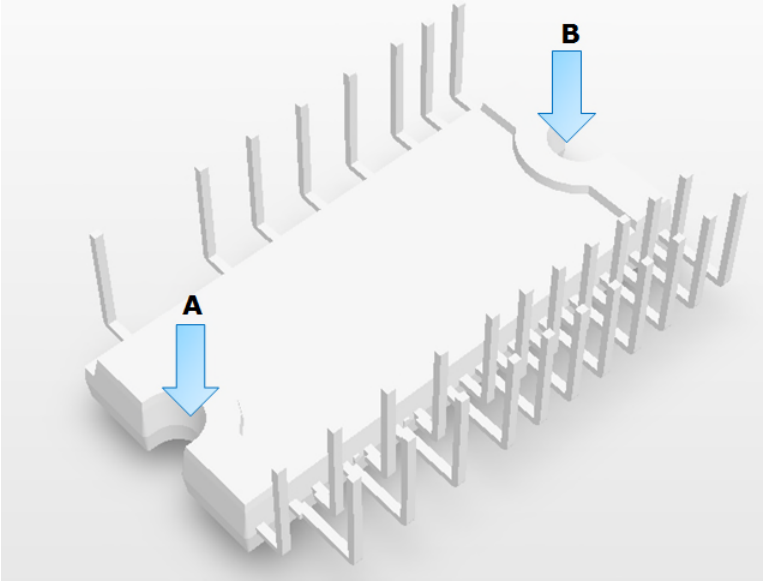

Figure 41 Recommended screw tightening order

8.2 Handling guideline

When installing a module to a heat sink, excessive uneven tightening force might apply stress to inside chips, which will lead damage to the device. An example of a recommended fastening order is shown in Figure 41.

- Do not over-torque when mounting the screws. Excessive mounting torque may cause damage to the module holes, screws and heat sink.
- Avoid one-side tightening stress. Uneven mounting can cause the module hole to be damaged.

To get effective heat dissipation, it is necessary to enlarge the contact area as much as possible, which will minimize the contact thermal resistance.

Apply thermal conductive grease properly over the contact surface between the module and the heat sink, which is also useful for preventing the contact surface from corrosion. Furthermore, the grease should be of robust quality and long-term endurance within a wide operating temperature range. Use a torque wrench to tighten to the specified torque rating. Exceeding the maximum torque limitation might cause a module to be damaged or deteriorated. Ensure that any dirt remaining on the contact surface between the module and the heat sink is removed. All equipment used to handle or mount the IM393-XX inverter IPM must comply with the relevant ESD standards. This includes, e.g., transportation, storage and assembly. The module itself is an ESD-sensitive device. It might therefore be damaged in the event of ESD shocks. Do not shake or grasp only the heat sink; in particular, avoid any chock to the PCB by grasping only the heat sink. This could cause package cracking or breaking.

8.3 Storage guideline

8.3.1 Recommended storage conditions

Temperature: 5 ~ 35 °C

Relative humidity: 45 ~ 75 %

- Avoid leaving the IM393-XX IPM exposed to moisture or direct sunlight. Especially be careful during periods of rain or snow.
- Use storage areas where there is minimal temperature fluctuation.

Rapid temperature change can cause moisture condensation on the stored IM393-XX IPM. This can result in lead oxidation or corrosion, leading to downgraded solderability.

- Do not allow the IM393-XX IPM to be exposed to corrosive gasses or dusty conditions.
- Do not allow excessive external forces or loads to be applied to the IM393-XX IPM while they are in storage.

9 References

[1] Product brief - Trenchstop igbt6, https://www.infineon.com/dgdl/Infineon-TRENCHSTOP+IGBT6-PB-v01_00-EN.pdf?fileId=5546d4625ee5d4cd015ef02060412593

[2] Industrial and general purpose gate driver ICs, https://www.infineon.com/dgdl/Infineon-Selection_Guide_Gate_Driver_ICs-SG-v01_00-EN.pdf?fileId=5546d46250cc1fdf015110069cb90f49

[3] W. Frank, J. Oehmen, A. Arens, D. Chung, J. Lee, “A new intelligent power module for home appliances”, Proceedings of PCIM 2009, Nuremberg, Germany

[4] D. Chung, S. Sul , "Minimum-Loss Strategy for three-Phase PWM Rectifier”, IEEE Transactions on Industrial Electronics, Vol. 46, No. 3, June, 1999

[5] PLECS™ simulation tool, https://plex.infineon.com/plexim/ipmmotor.html

[6] Aavid Thermalloy, http://www.aavidthermalloy.com/technical/correct.shtml

[7] S. Lee, “How to select a heat sink”, Electronics Coolings, Vol.1, No.1, June 1995

[8] CIPOS™ Mini Technical description, https://www.infineon.com/dgdl/Infineon-AN2016-10_CIPOS_Mini_Technical_description-AN-v02_31-EN.pdf?fileId=5546d462566bd0c7015674af32d5258b

Revision history

Document version	Date of release	Description of changes
1.0	2019-04-01	First release

Trademarks
All referenced product or service names and trademarks are the property of their respective owners.

Edition 2019-04-01

Published by

Infineon Technologies AG

81726 Munich, Germany

© 2019 Infineon Technologies AG. All Rights Reserved.

Do you have a question about this document?

Email: erratum@infineon.com

Document reference
AN2018-13

IMPORTANT NOTICE

The information contained in this application note is given as a hint for the implementation of the product only and shall in no event be regarded as a description or warranty of a certain functionality, condition or quality of the product. Before implementation of the product, the recipient of this application note must verify any function and other technical information given herein in the real application. Infineon Technologies hereby disclaims any and all warranties and liabilities of any kind (including without limitation warranties of non-infringement of intellectual property rights of any third party) with respect to any and all information given in this application note.

The data contained in this document is exclusively intended for technically trained staff. It is the responsibility of customer's technical departments to evaluate the suitability of the product for the intended application and the completeness of the product information given in this document with respect to such application.

For further information on the product, technology delivery terms and conditions and prices please contact your nearest Infineon Technologies office (**www.infineon.com**).

Please note that this product is not qualified according to the AEC Q100 or AEC Q101 documents of the Automotive Electronics Council.

WARNINGS

Due to technical requirements products may contain dangerous substances. For information on the types in question please contact your nearest Infineon Technologies office.

Except as otherwise explicitly approved by Infineon Technologies in a written document signed by authorized representatives of Infineon Technologies, Infineon Technologies' products may not be used in any applications where a failure of the product or any consequences of the use thereof can reasonably be expected to result in personal injury.