Application Note AN2013-04
V1.1 February 2014

AN2013-04 F3L2020E12-F-P_EVAL

Evaluation Driver Board for EconoPACK™ 4 3-Level Modules in NPC2-Topology with 1ED020I12-B2 gate driver IC

IFAG IPC APS

www.infineon.com

Edition 2011-06-01
Published by
Infineon Technologies AG
59568 Warstein, Germany
© Infineon Technologies AG 2011.
All Rights Reserved.

Attention please!

THE INFORMATION GIVEN IN THIS APPLICATION NOTE IS GIVEN AS A HINT FOR THE IMPLEMENTATION OF THE INFINEON TECHNOLOGIES COMPONENT ONLY AND SHALL NOT BE REGARDED AS ANY DESCRIPTION OR WARRANTY OF A CERTAIN FUNCTIONALITY, CONDITION OR QUALITY OF THE INFINEON TECHNOLOGIES COMPONENT. THE RECIPIENT OF THIS APPLICATION NOTE MUST VERIFY ANY FUNCTION DESCRIBED HEREIN IN THE REAL APPLICATION. INFINEON TECHNOLOGIES HEREBY DISCLAIMS ANY AND ALL WARRANTIES AND LIABILITIES OF ANY KIND (INCLUDING WITHOUT LIMITATION WARRANTIES OF NON-INFRINGEMENT OF INTELLECTUAL PROPERTY RIGHTS OF ANY THIRD PARTY) WITH RESPECT TO ANY AND ALL INFORMATION GIVEN IN THIS APPLICATION NOTE.

Information

For further information on technology, delivery terms and conditions and prices please contact your nearest Infineon Technologies Office (www.infineon.com).

Warnings

Due to technical requirements components may contain dangerous substances. For information on the types in question please contact your nearest Infineon Technologies Office. Infineon Technologies Components may only be used in life-support devices or systems with the express written approval of Infineon Technologies, if a failure of such components can reasonably be expected to cause the failure of that life-support device or system, or to affect the safety or effectiveness of that device or system. Life support devices or systems are intended to be implanted in the human body, or to support and/or maintain and sustain and/or protect human life. If they fail, it is reasonable to assume that the health of the user or other persons may be endangered.

AN2013-04

Revision History: date (2014-02-10), V1.1

Previous Version: V1.0

Subjects:

- CoreLess Transformer driver IC replaced by 1ED020I12-B2
- Timing capacitor for desaturation detection updated
- Email address updated

Author: Alain Siani (IFAG IPC APS AE)

We Listen to Your Comments

Any information within this document that you feel is wrong, unclear or missing at all? Your feedback will help us to continuously improve the quality of this document. Please send your proposal (including a reference to this document) to: [WAR-IGBT-Application@infineon.com]

1 Introduction 4

1.1 Part Number explanation 5

2 Design features 5

2.1 Key Data 6

3 Pin assignments 7

3.1 Mechanical dimensions 9

4 Functionality of the board 10

4.1 Power supply 10

4.2 Input stage 11

4.3 Short circuit detection 11

4.4 Output stage 12

5 Paralleling 12

6 Schematics and Layouts 14

6.1 Schematics 14

6.2 Layouts 15

7 Bill of Material of F3L2020E12-F-P_EVAL 18

8 How to order the Evaluation Driver Board 19

9 Reference 19



The board described is an evaluation board dedicated for laboratory environment only. It operates at high voltages. This board must be operated by qualified and skilled personnel familiar with all applicable safety standards.

1 Introduction

The evaluation driver board F3L2020E12-F-P_EVAL for 3-level NPC2 EconoPACK™ 4 modules as shown in Figure 1 was developed to support customers during their first steps designing applications with EconoPACK™ 4 3-level NPC2 modules. This evaluation board was designed in addition to the module adapter board MA3L120E12_EVAL [1] or could be a complementary part for an existing customer driver solution. For more details about the 3-level topology, please refer to [1].

The board is available from Infineon in small quantities. The properties of this board are described in the design feature chapter of this document, whereas the remaining paragraphs provide information to enable the customers to copy, modify and qualify the design for production, according to their own specific requirements.

Environmental conditions were considered in the design of the F3L2020E12-F-P_EVAL. Components qualified for a lead-free reflow soldering process were selected. The design was tested as described in this document but not qualified regarding manufacturing and operation over the whole operating temperature range or lifetime.

The boards provided by Infineon are subject to functional testing only.

Due to their purpose evaluation boards are not subject to the same procedures regarding Returned Material Analysis (RMA), Process Change Notification (PCN) and Product Discontinuation (PD) as regular products.

See Legal Disclaimer and Warnings for further restrictions on Infineon's warranty and liability.

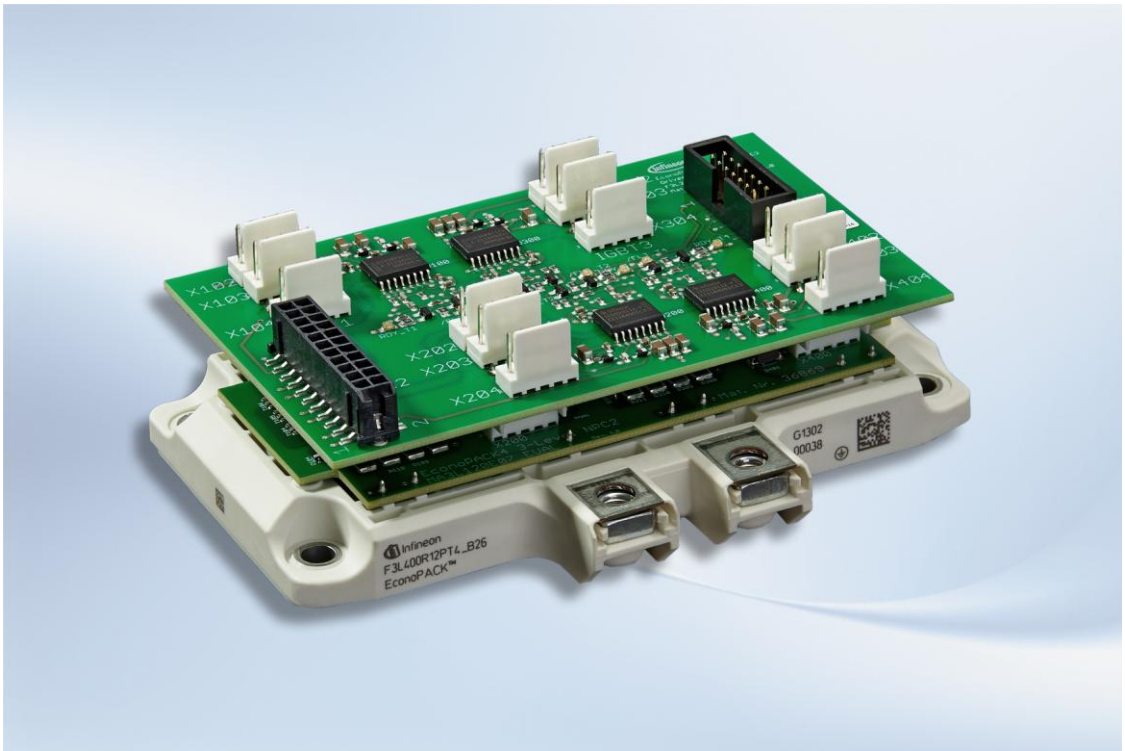

Figure 1: Evaluation driver board F3L2020E12-F-P_EVAL, adapter board and EconoPACK™ 4 3-level module as evaluation kit

[1] See AN2012-04 "Evaluation Adapter Board for 3-Level NPC2 EconoPACK™ 4" for further information

1.1 Part Number explanation

Part number explanation:

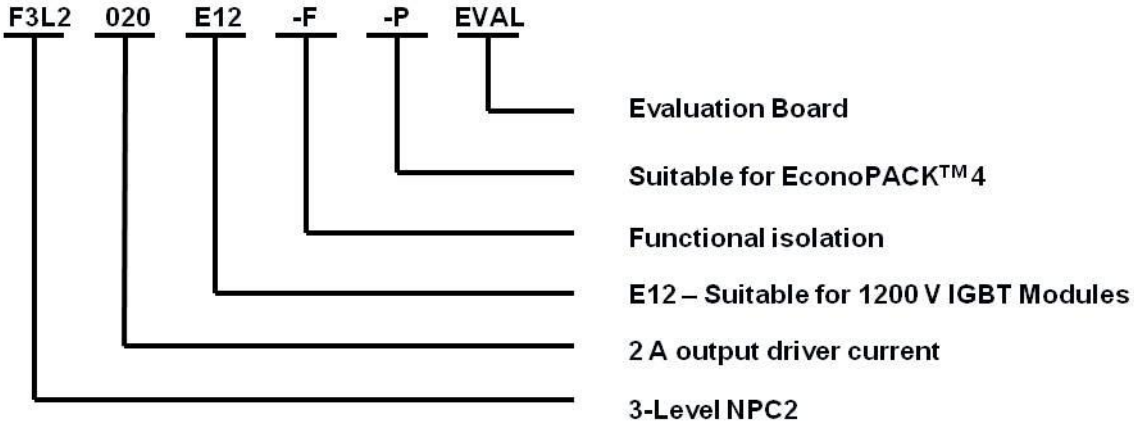

2 Design features

The following sections provide an overview of the board including main features, key data, pin assignments and mechanical dimensions.

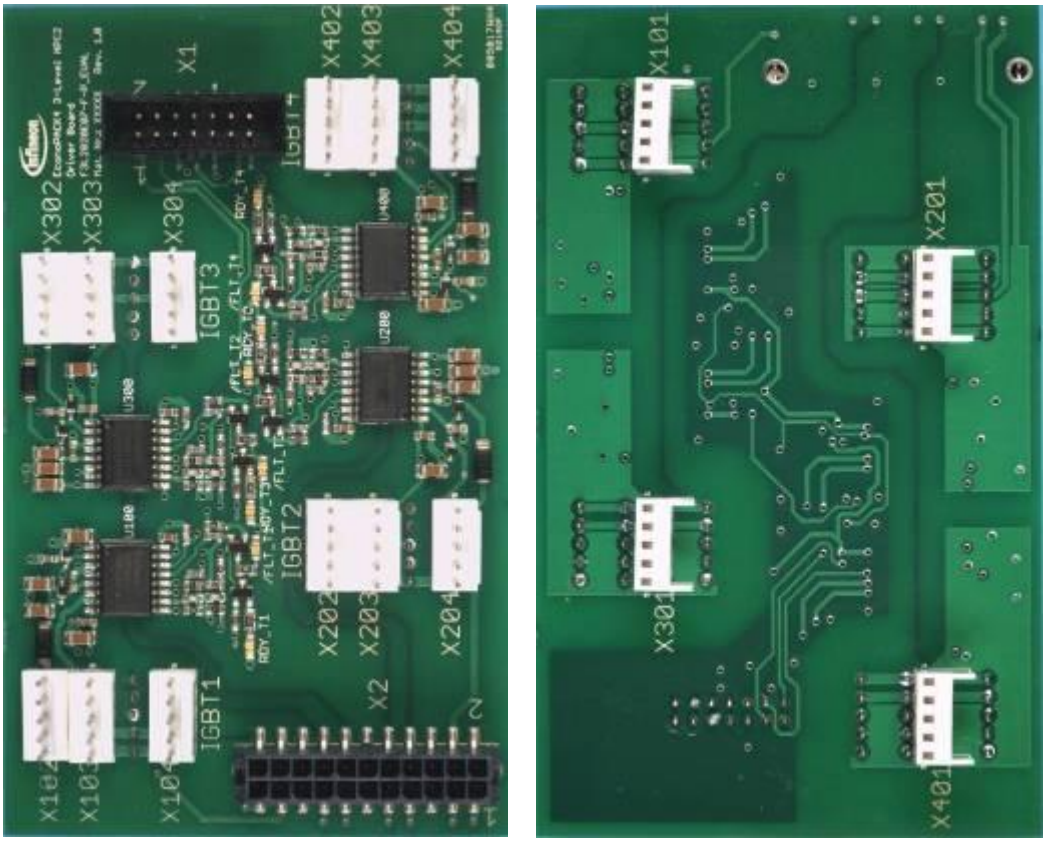

Figure 2: Evaluation Driver Board F3L2020E12-F-P_EVAL for EconoPACK™ 4 3-level modules

The driver board F3L2020E12-F-P_EVAL as presented in Figure 2 offers four independent channels to drive IGBTs. It is based on Infineon's EiceDRIVER™ IC 1ED020I12-B2 with Coreless Transformer Technology (CLT).

The board operates as single module driver or as main driver for up to three IGBT modules in parallel configuration. The evaluation board is developed to operate in combination with the MA3L120E12_EVAL[2] evaluation adapter board mounted in conjunction with a 3-level NPC2 EconoPACK™ 4 module. The F3L2020E12-F-P_EVAL driver board provides

- Functional isolation between logic and power side utilizing Coreless Transformer Technology
- Short circuit protection and Under Voltage Lock Out (UVLO)
- Active clamping
- Bipolar power supply of the driver's secondary side with +15V/-8V
- Positive or negative input logic with 5 V CMOS level for PWM
- RDY and /FLT output status signals

2.1 Key Data

General key data and characteristic values are given in Table 1. These are typical values, measured at an ambient temperature of T_{amb} = 25 °C.

Table 1: Electrical Parameters

Parameter	Description	Value	Unit
U_{LS}	Logic power supply voltage	+5	V
I_{LOGIC}	Logic power supply current	100	mA
I_{OUT}	Maximum peak output current; each driver channel	± 2	A
V_{DD}	IGBT driver positive supply voltage; each driver channel	15	V
V_{EE}	IGBT driver negative supply voltage; each driver channel	-8	V
I_{DD}+	IGBT driver positive supply current; each driver channel f_{sw}=20kHz,T_{VJ}=125°C	47	mA
I_{EE}-	IGBT driver negative supply current each driver channel f_{sw}=20kHz,T_{VJ}=125°C	47	mA
t_{PDELAY}	Propagation delay time	200	ns
V_{DESAT}	Desaturation reference level	9	V
T_{op}	Operating temperature	-40...+85	°C

The EconoPACK™ 4 3-level NPC2 schematic as shown in Figure 3 consists of four IGBTs. The diagram presents the positions of the IGBTs with their designation used throughout this document.

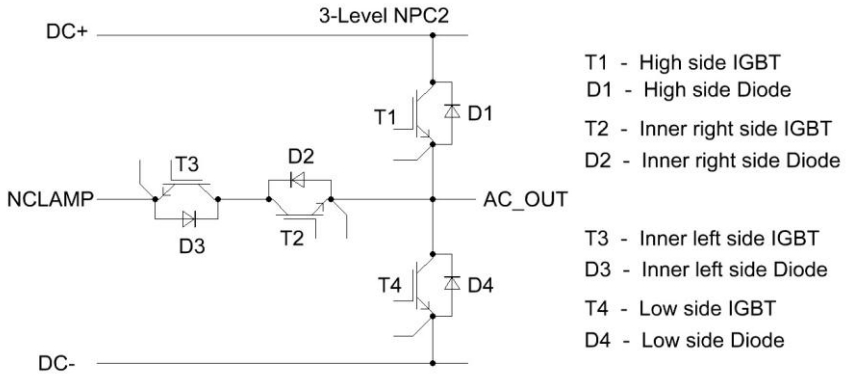

Figure 3: Schematic with the designation of each IGBT

[2] AN2012-04 "Evaluation Adapter Board for EconoPACKTM 4 3-Level Modules in NPC2-Topology" .

Figure 4 hints out the functional groups of the F3L2020E12-F-P_EVAL evaluation board's top side.

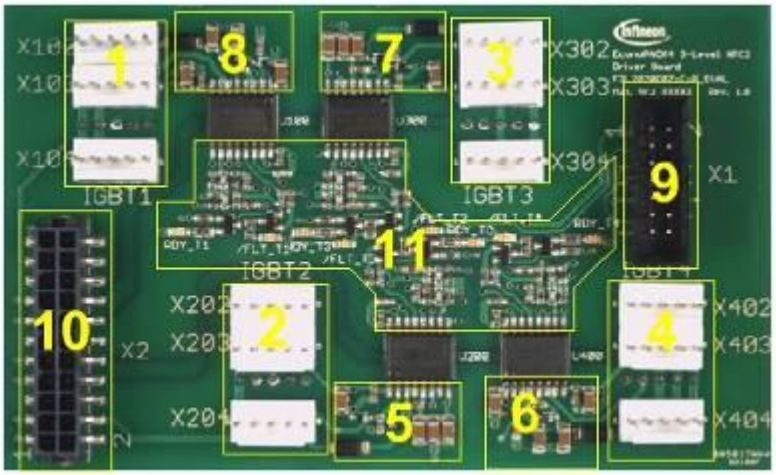

1: Connectors high side IGBT
2: Connectors inner right side IGBT
3: Connectors inner left side IGBT
4: Connectors low side IGBT
5: Power side inner right side IGBT
6: Power side low side IGBT
7: Power side inner left side IGBT
8: Power side high side IGBT
9: Logic connector
10: Power supply connector
11: Logic side

Figure 4: Functional groups of the F3L2020E12-F-P_EVAL evaluation board's top side

Figure 5 illustrates the functional groups of the F3L2020E12-F-P_EVAL evaluation board's bottom side.

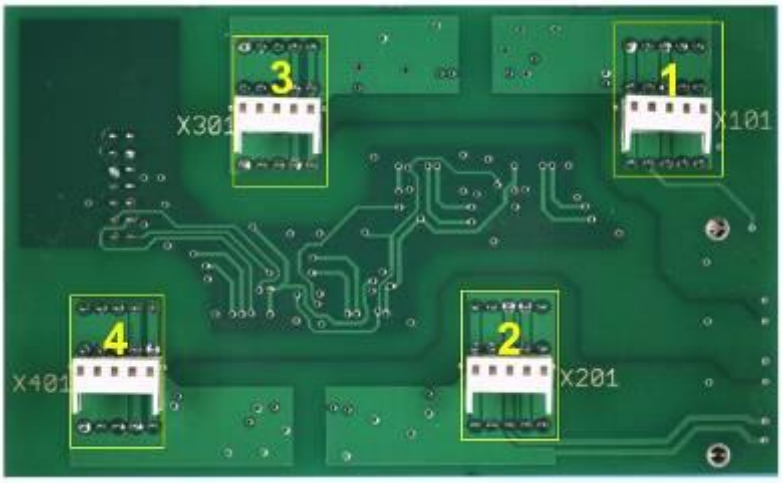

1: Connector high side IGBT
2: Connector inner right side IGBT
3: Connector inner left side IGBT
4: Connector low side IGBT

Figure 5: Functional groups of the F3L2020E12-F-P_EVAL evaluation board's bottom side

3 Pin assignments

All PWM logic signals and voltage supplies have to be applied as listed in Tables 2 to 5.

Table 2: Pin assignment of the connector X101 for the high side IGBT

Pin name	Pin function
X101-1	DESAT1
X101-2	OUT_T1
X101-3	-8V_T1
X101-4	GND_T1
X101-5	+15V_T1

For paralleling, connectors X102, X103 and X104 for the high side IGBT share a common pin assignment with the connector X101.

Table 3: Pin assignment of the connector X201 for the inner right side IGBT

Pin name	Pin function
X201-1	DESAT2
X201-2	OUT_T2
X201-3	-8V_T2
X201-4	GND_T2
X201-5	+15V_T2

For paralleling, connectors X202, X203 and X204 for the inner right side IGBT share a common pin assignment with the connector X201.

Table 4: Pin assignment of the connector X301 for the inner left side IGBT

Pin name	Pin function
X301-1	DESAT3
X301-2	OUT_T3
X301-3	-8V_T3
X301-4	GND_T3
X301-5	+15V_T3

For paralleling, connectors X302, X303 and X304 for the inner left side IGBT share a common pin assignment with the connector X301.

Table 5: Pin assignment of the connector X401 for the low side IGBT

Pin name	Pin function
X401-1	DESAT4
X401-2	OUT_T4
X401-3	-8V_T4
X401-4	GND_T4
X401-5	+15V_T4

For paralleling, connectors X402, X403 and X404 for the low side IGBT share a common pin assignment with the connector X401.

The connector pin assignment of X1 and X2 are listed in Table 6 and 7.

Table 6: Pin assignment of the logic connector X1

Pin name	Pin function
X1-1	+5V
X1-2	GND
X1-3	/RST
X1-4	/FLT_T1
X1-5	IN+_T1
X1-6	IN-_T1
X1-7	IN+_T2
X1-8	IN-_T2
X1-9	IN+_T3
X1-10	IN-_T3
X1-11	/FLT_T4
X1-12	IN+_T4
X1-13	IN-_T4
X1-14	NC

Table 7: Pin assignment of the power supply connector X2

Pin name	Pin function
X2-1	GND_T2
X2-2	NC
X2-3	-8V_T2
X2-4	+15V_T2
X2-5	NC
X2-6	NC
X2-7	GND_T4
X2-8	+15V_T4
X2-9	-8V_T4
X2-10	NC
X2-11	NC
X2-12	NC
X2-13	GND_T3
X2-14	+15V_T3
X2-15	-8V_T3
X2-16	NC
X2-17	NC
X2-18	NC
X2-19	+15V_T1
X2-20	-8V_T1
X2-21	GND_T1
X2-22	NC

3.1 Mechanical dimensions

The dimensions of the F3L2020E12-F-P_EVAL Evaluation board are given in Figure 6.

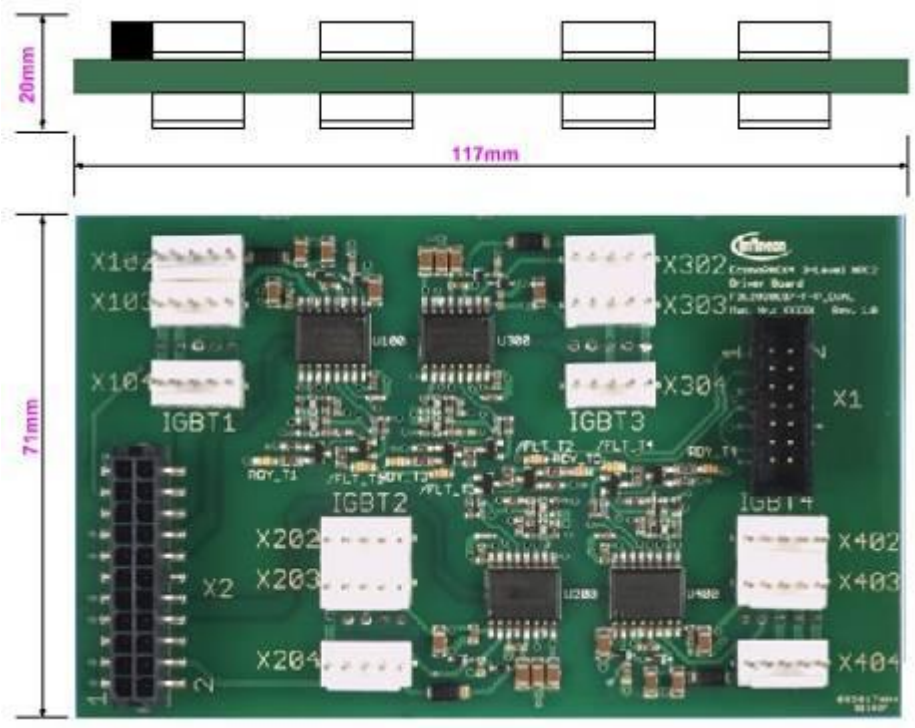

Figure 6: Mechanical dimensions of the F3L2020E12-F-P_EVAL

4 Functionality of the board

The F3L2020E12-F-P_EVAL driver board is a complementary part of the evaluation kit to drive one 3-level IGBT Module as displayed in Figure 7. The adapter board should be pressed to the EconoPACK™ 4 as described in the AN2010-06.



F3L2020E12-F-P_EVAL

MA3L120E12_EVAL

F3L400R12PT4_B26

Figure 7: Driver board, adapter board and IGBT module of the 3-level evaluation kit

4.1 Power supply

Four external power supplies for the IGBT driver ICs and external booster stages are needed. These -8V/+15V power supplies are applied to the F3L2020E12-F-P_EVAL board using connector X2 as depicted in Figure 8.

The logic side has to be powered with +5V via the connector X1 also represented in Figure 8. Further pin assignments can be found in Table 6 and Table 7 on page 8.

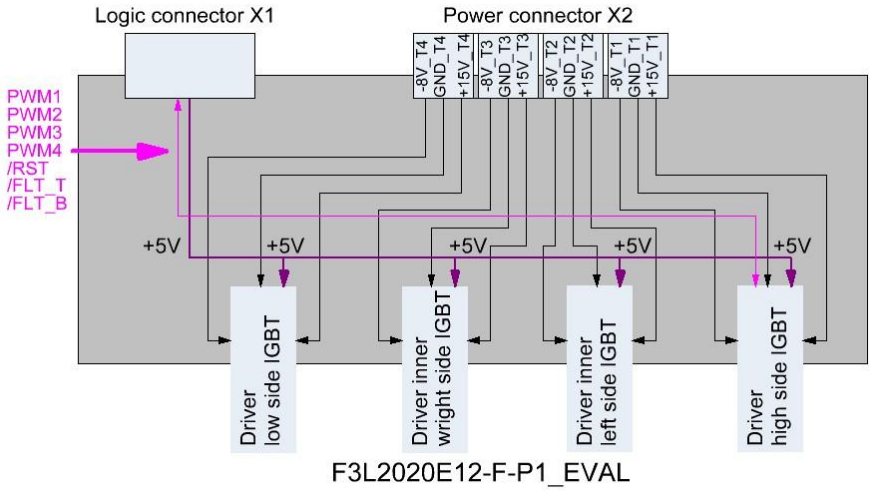

Figure 8: Principle diagram of the F3L2020E12-F-P_ EVAL

The 1ED020I12-B2 IGBT driver IC monitors the supply voltage and activates the Under Voltage Lock Out (UVLO) as soon as the supply voltage drops below the UVLO reference value.

4.2 Input stage

The Evaluation Driver Board is designed for one leg of a 3-level IGBT configuration; therefore it is necessary to apply four separate PWM signals dedicated to each IGBT. Schematic details for a single IGBT driver are depicted in Figure 9.

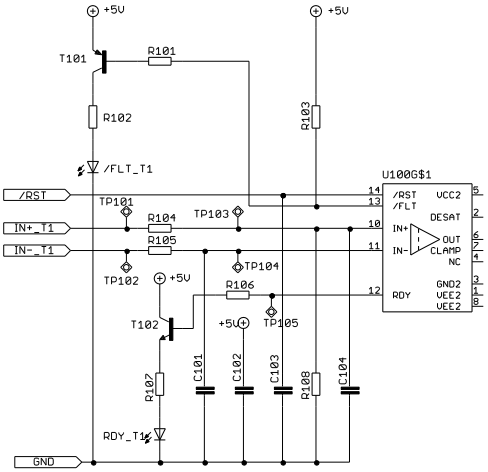

Figure 9: Schematic details of the input stage for a single IGBT driver.

It is possible to choose positive or negative logic according to individual designs. For the use of IN+ as PWM input, the IN- pin can be used as enable signal pin.

For the use of IN- pin as PWM input, the IN+ pin can be used as enable signal pin.

If the power supply voltage of the logic side exceeds the power-up voltage V_{UVLOL1} and the power supply voltage of the high side exceeds the power-up voltage V_{UVLOH2}, green RDY LEDs shown in Figure 10 for IGBT1 to IGBT4 are turned on.

4.3 Short circuit detection

Short circuit is monitored individually by the four IGBT driver channels. Each of the four channels provides an independent fault signal; they share a common reset input. Failure handling of the high and low side IGBT has to be part of the superordinated control.

When a short circuit occurs, the voltage increase across the IGBT is detected by the desaturation protection of the 1ED020I12-B2 and the IGBT is turned off. The fault is reported to the primary side of the driver as a low active signal. Red LEDs /FLT_T1 to /FLT_T4 as presented in Figure 10 are turned on to signalize the failure condition. The fault status remains active as long as there is no reset signal applied to the driver. The /FLT signal is active low.

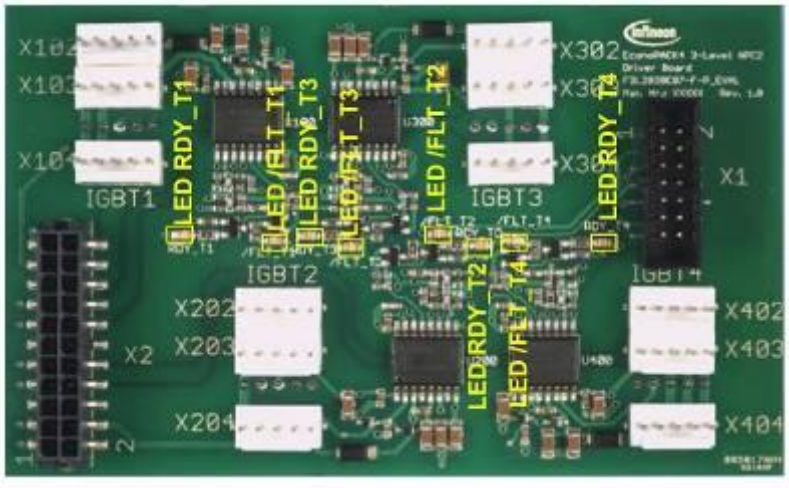

Figure 10: Positions of the status LEDs on F3L2020E12-F-P_EVAL

4.4 Output stage

The output stage of the F3L2020E12-F-P_EVAL as depicted in Figure 11 is prepared to be connected to the complementary MA3L120E12_EVAL evaluation module adapter. The module adapter is directly plugged to the 3-level EconoPACK™ 4 module as shown in Figure 7 on page 10. The MA3L120E12_EVAL evaluation board consists of an active booster stage to provide the necessary switching power, demanded by the IGBT module.

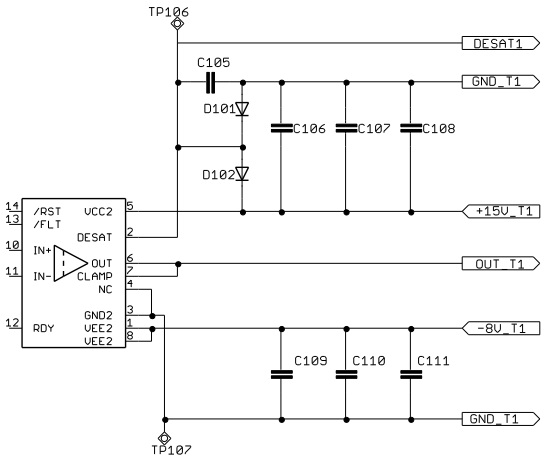

Figure 11: Schematic details of the output stage for a single IGBT driver

For further and more detailed information on the 1ED020I12-B2 please refer to the Infineon datasheet.

5 Paralleling

The F3L2020E12-F-P_EVAL was designed to work with the evaluation adapter board MA3L120E12_EVAL as single unit as depicted in Figure 7 on page 10 or to allow the parallel connection of up to three modules, each equipped with one MA3L120E12_EVAL adapter board as represented in Figure 12. In case of paralleling, the driver board does not need to be plugged into the complementary adapter board. The connection from the driver to the adapter boards is done utilizing the connectors on the top side of the driver board as shown in Figure 13.

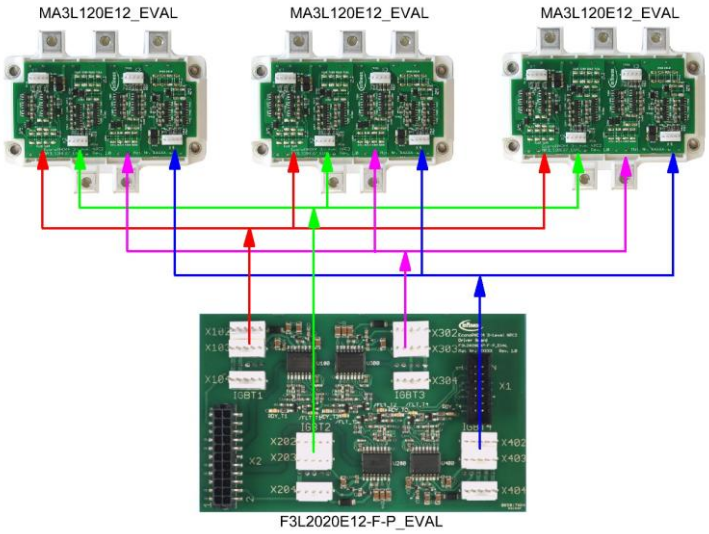

Figure 12: Principle of parallel connection of three EconoPACK™ 4 IGBT modules

Figure 13 displays a parallel connection of three 3-level IGBT modules. In this case it is necessary to assure the same length of the gate wire between the driver and adapter boards to obtain the same run time of the gate signals for the three IGBTs. Star connection of the IGBTs reduces the cross flow in the emitter lines after the switching sequence. The F3L2020E12-F-P_EVAL driver board allows to switch up to three IGBTs in parallel.

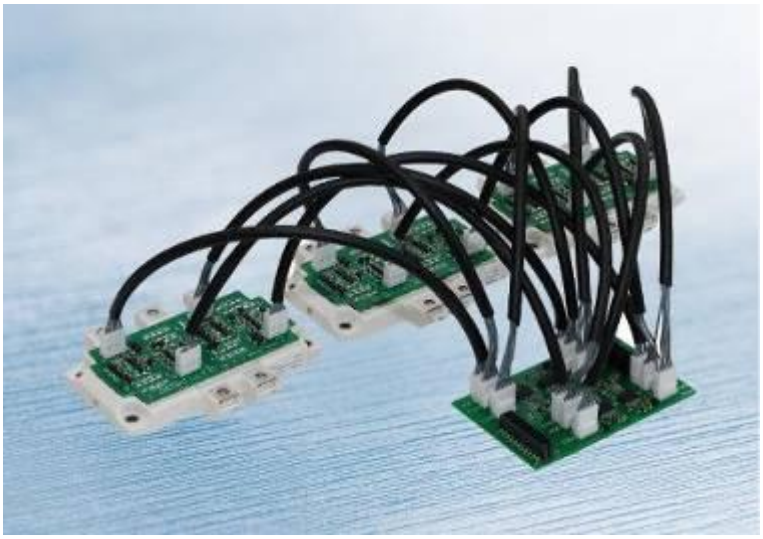

Figure 13: Three parallel connected EconoPACK™ 4 IGBT modules equipped with MA120E12_EVAL adapter boards driven by F3L2020E12-F-P_EVAL driver board.

6 Schematics and Layouts

To meet individual customer requirements and make the evaluation driver board for the EconoPACK™ 4 module a basis for development or modification, all necessary technical data like schematic, layout and components are included in this chapter.

6.1 Schematics

Figure 14 depicts the driver circuit of the high side and the low side IGBT.

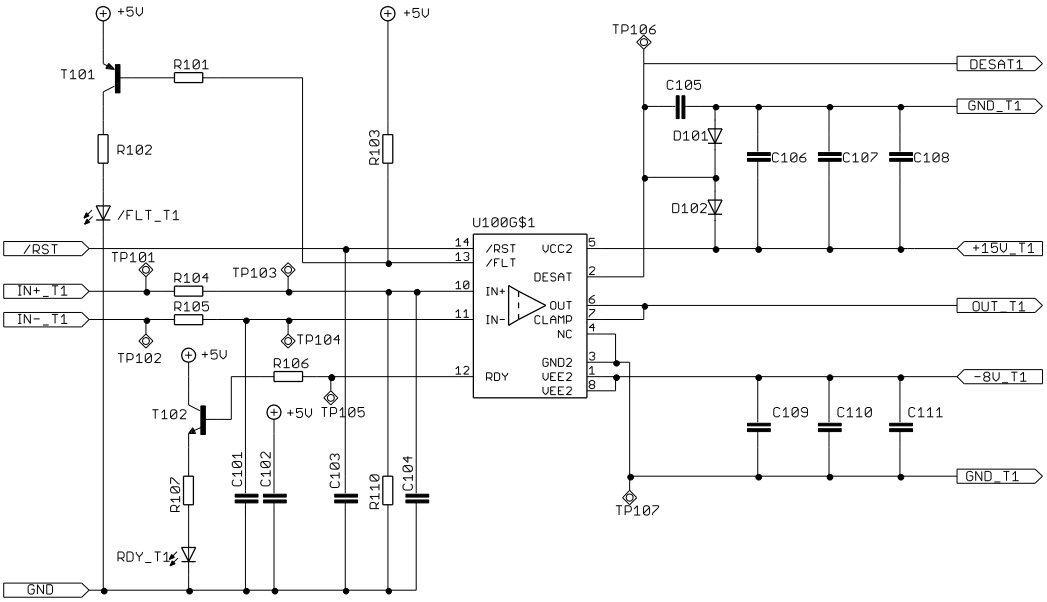

Figure 14: Driver schematic of the high side and the low side IGBT

Figure 15 illustrates the driver circuit of the inner left side and the inner right side IGBT.

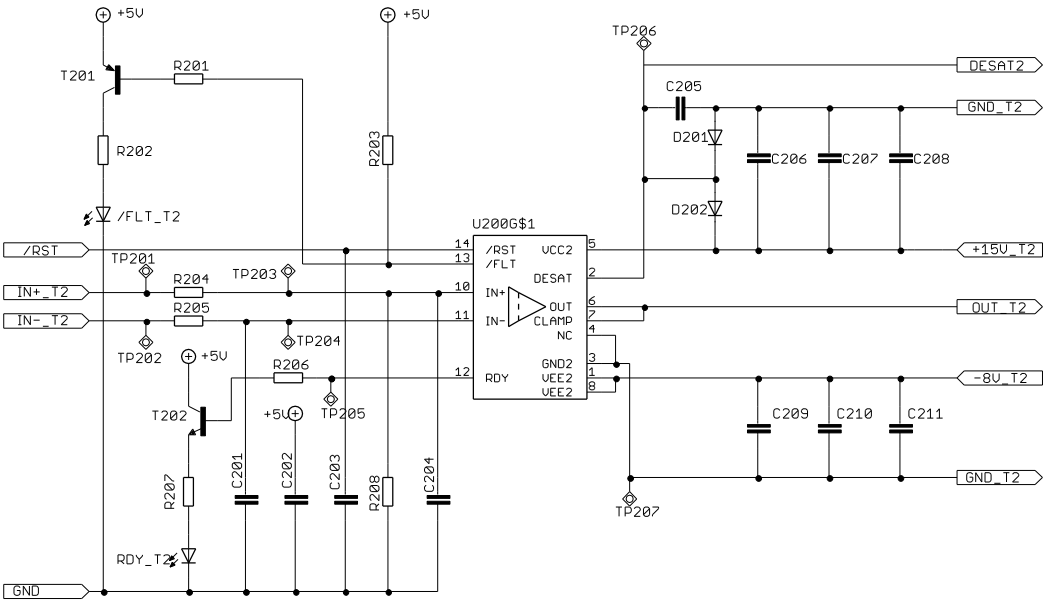

Figure 15: Driver schematic of the inner left side and the inner right side IGBT

Figure 16 depicts the pin assignment of the power connector X1 and logic connector X2.

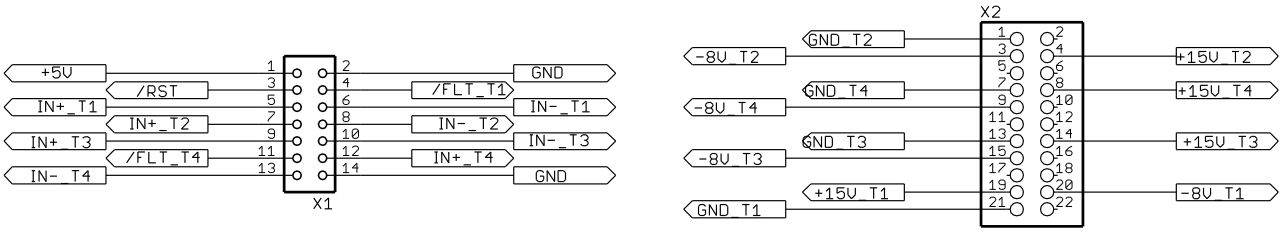

Figure 16: Power connector X2 and Logic connector X1

Figure 17 details the pin assignment of the IGBT gate connectors.

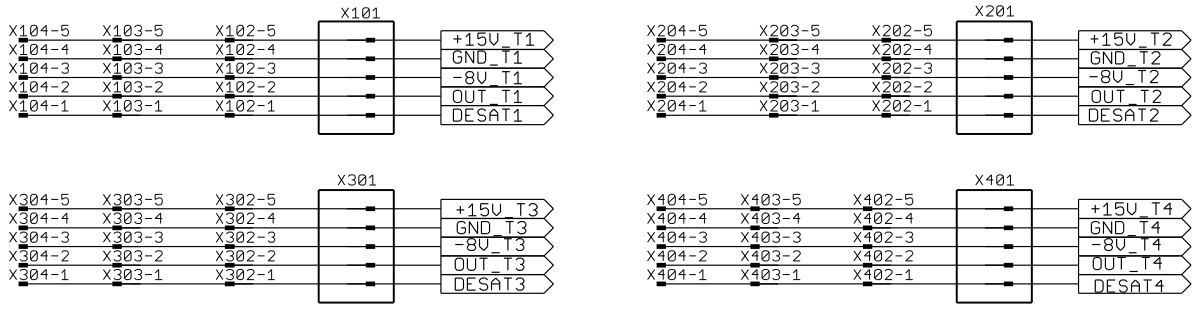

Figure 17: Gate signal connectors

6.2 Layouts

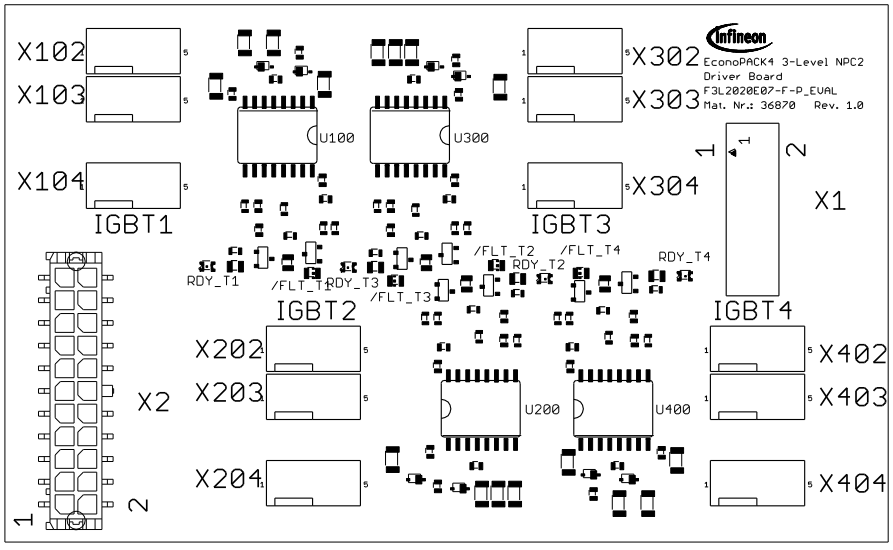

Figure 18: Components placed on the top side of the F3L2020E12-F-P_EVAL

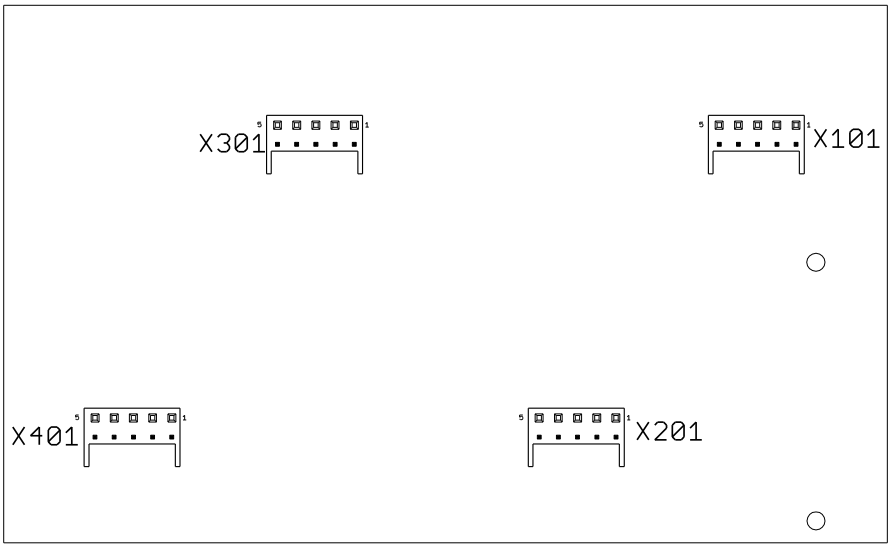

Figure 19: Components placed on the bottom side of the F3L2020E12-F-P_EVAL

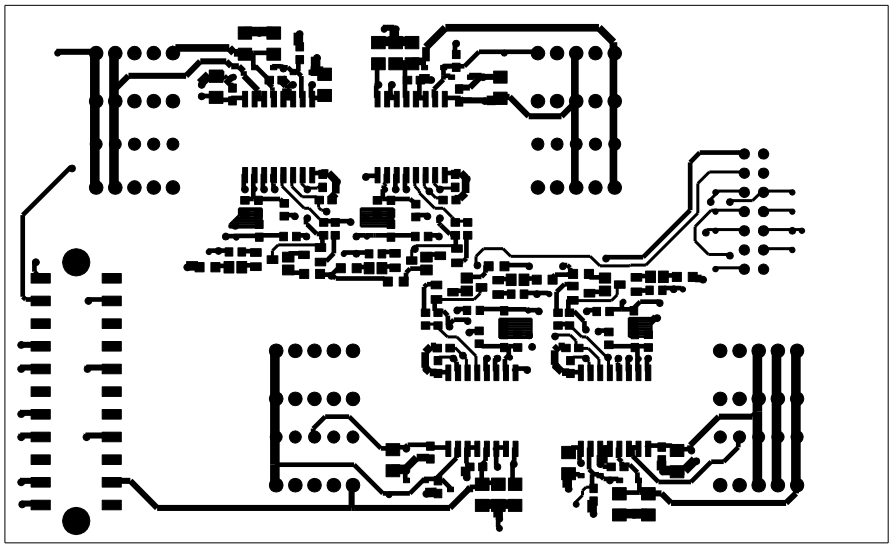

Figure 20: F3L2020E12-F-P_EVAL Top Layer

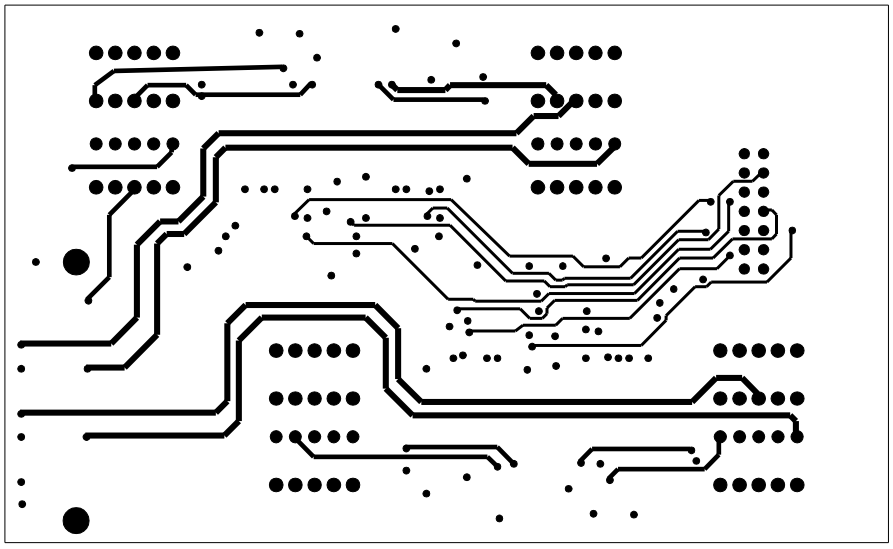

Figure 21: F3L2020E12-F-P_EVAL Layer 2

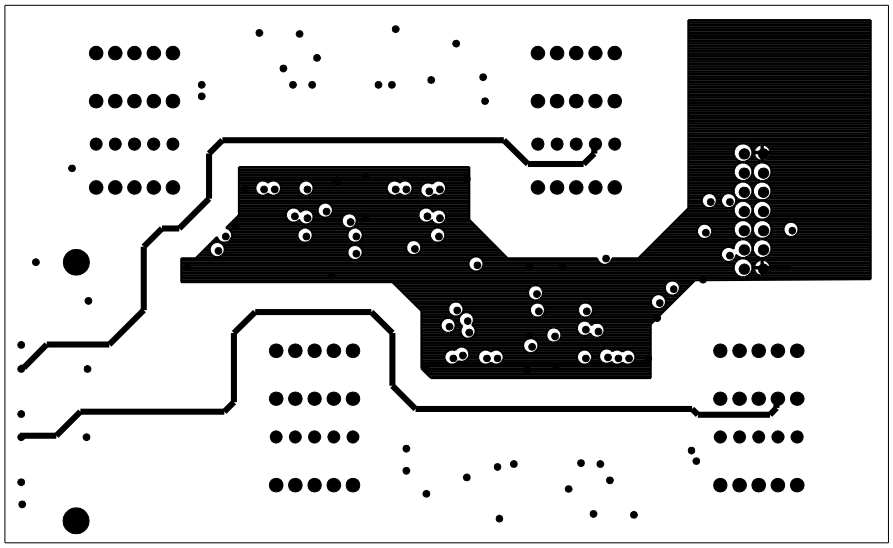

Figure 22: F3L2020E12-F-P_EVAL Layer 3

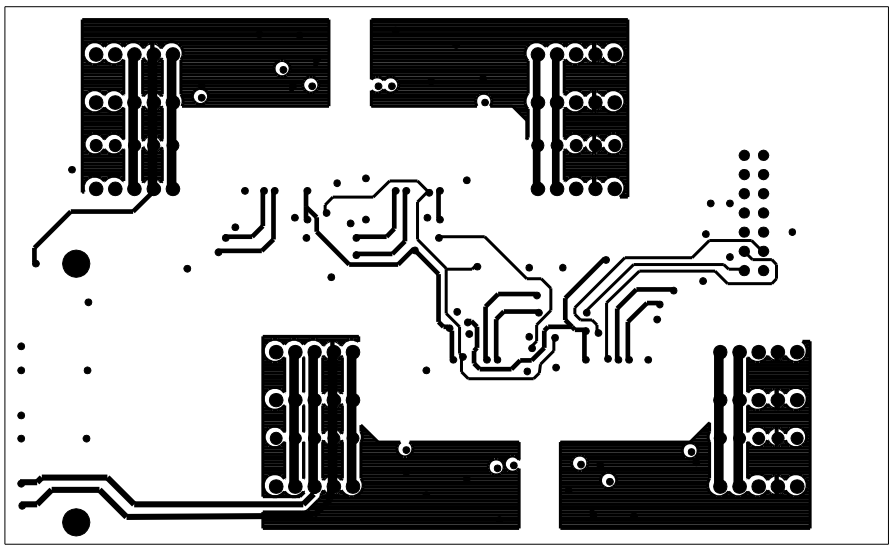

Figure 23: F3L2020E12-F-P_EVAL Bottom Layer

7 Bill of Material of F3L2020E12-F-P_EVAL

The bill of material includes a part list as well as assembly notes.

The tolerances for resistors should be less or equal to ±1 %, for capacitors of the type C0G less or equal to ±5 % and for capacitors of the type X7R less or equal to ±10 %.

Type	Value	Package	QTY	Name Part	Recommended Manufacturer
Resistor	39R	R0805	4	R102, R202, R302, R402	-
Resistor	100R	R0603	8	R104, R105, R204, R205, R304, R305, R404, R405	-
Resistor	1k	R0805	4	R107, R207, R307, R407	-
Resistor	4k7	R0603	4	R103, R203, R303, R403	-
Resistor	10k	R0603	16	R101, R106, R108, R111, R201, R206, R208, R211, R301, R306, R308, R311, R401, R406, R408, R411	-
Capacitor	4µ7/25V/X7R	C1206	16	C107, C108, C110, C111, C207, C208, C210, C211, C307, C308, C310, C311, C407, C408, C410, C411	Murata
Capacitor	100n/50V/X7R	C0603	12	C102, C106, C109, C202, C206, C209, C302, C306, C309, C402, C406, C409	Murata
Capacitor	470p/50V/X7R	C0603	4	C103, C203, C303, C403	Murata
Capacitor	390p/50V/C0G	C0603	4	C105, C205, C305, C405	Murata
Capacitor	100p/50V/C0G	C0603	8	C101, C104, C201, C204, C301, C304, C401, C404	Murata
Semiconductor	BAT165	SOD323R	8	D101, D102, D201, D202, D301, D302, D401, D402	Infineon
Semiconductor	BC846	SOT23	4	T102, T202, T302, T402	-
Semiconductor	BC856	SOT23	4	T101, T201, T301, T401	-
Semiconductor	1ED020I12-B2	P-DSO-16	4	U100, U200, U300, U400	Infineon
Semiconductor	LEDCHIPLED_ GREEN	0805	4	RDY_T1, RDY_T2, RDY_T3, RDY_T4	-
Semiconductor	LEDCHIPLED_ RED	0805	2	/FLT_T1, /FLT_T2, /FLT_T3, /FLT_T4	-

Type	Value	Package	QTY	Name Part	Recommended Manufacturer
Connector	TYCO / AMP 1-1634688-4		1	X1	TE connectivity
Connector	MOLEX 22022055	4455-5	4	X101, X201, X301, X401	Molex
Connector	MOLEX 43045-2216	MICROFIT	1	X2	Molex
Connector	MOLEX 22232051	PITCH KK	12	X102, X103, X104, X202, X203, X204, X302, X303, X304, X402, X403, X404	Molex

The fitting connectors of X1 have following numbers 1658621-2 resp. 499252-9 available at TE-connectivity.

The fitting connectors of X2 have following numbers 0430252200 resp. 0430300003 available at Molex.

8 How to order the Evaluation Driver Board

Every evaluation driver board has its own IFX order number and can be ordered via your Infineon sales partner.

Information can also be found at the Infineon Web Page: www.infineon.com

CAD-data for the board described here are available on request. The use of this data is subjected to the disclaimer given in this AN. Please contact: WAR-IGBT-Application@infineon.com

IFX order number for F3L2020E12-F-P_EVAL: SP001096478

IFX order number for MA3L120E12_EVAL: SP001072010

9 Reference

Following literature can be helpful for the introduction into the three level topics:

[1] Zhang Xi, Uwe Jansen, Holger Rüthing: 'IGBT power modules utilizing new 650V IGBT3 and Emitter Controlled Diode3 chips for 3-level converter' ISBN: 978-3-8007-3158-9 Proceedings PCIM Europe 2009 Conference