Application Note AN 2011-03
V1.0 June 2011

AN2011-03 F3L020E07-F-P_EVAL

Evaluation Driver Board for EconoPACK™ 4 3-Level Modules in NPC1-Topology with 1ED020I12-F gate driver IC

IFAG IMM INP M AE

Edition 2011-06-01
Published by
Infineon Technologies AG
59568 Warstein, Germany
© Infineon Technologies AG 2011.
All Rights Reserved.

Attention please!

THE INFORMATION GIVEN IN THIS APPLICATION NOTE IS GIVEN AS A HINT FOR THE IMPLEMENTATION OF THE INFINEON TECHNOLOGIES COMPONENT ONLY AND SHALL NOT BE REGARDED AS ANY DESCRIPTION OR WARRANTY OF A CERTAIN FUNCTIONALITY, CONDITION OR QUALITY OF THE INFINEON TECHNOLOGIES COMPONENT. THE RECIPIENT OF THIS APPLICATION NOTE MUST VERIFY ANY FUNCTION DESCRIBED HEREIN IN THE REAL APPLICATION. INFINEON TECHNOLOGIES HEREBY DISCLAIMS ANY AND ALL WARRANTIES AND LIABILITIES OF ANY KIND (INCLUDING WITHOUT LIMITATION WARRANTIES OF NON-INFRINGEMENT OF INTELLECTUAL PROPERTY RIGHTS OF ANY THIRD PARTY) WITH RESPECT TO ANY AND ALL INFORMATION GIVEN IN THIS APPLICATION NOTE.

Information

For further information on technology, delivery terms and conditions and prices please contact your nearest Infineon Technologies Office (www.infineon.com).

Warnings

Due to technical requirements components may contain dangerous substances. For information on the types in question please contact your nearest Infineon Technologies Office. Infineon Technologies Components may only be used in life-support devices or systems with the express written approval of Infineon Technologies, if a failure of such components can reasonably be expected to cause the failure of that life-support device or system, or to affect the safety or effectiveness of that device or system. Life support devices or systems are intended to be implanted in the human body, or to support and/or maintain and sustain and/or protect human life. If they fail, it is reasonable to assume that the health of the user or other persons may be endangered.

AN 2011-03
Revision History: date (2011-06-01) , V1.0
Previous Version: none
Subjects: none

Author: Alain Siani (IFAG IMM INP M AE)

We Listen to Your Comments

Any information within this document that you feel is wrong, unclear or missing at all? Your feedback will help us to continuously improve the quality of this document. Please send your proposal (including a reference to this document) to: [WAR-IGBT-Application@infineon.com]

1 Introduction 4

1.1 Part Number explanation 5

2 Design features 5

2.1 Key Data 6

3 Pin assignments 7

3.1 Mechanical dimensions 10

4 Functionality of the board 10

4.1 Power supply 10

4.2 Input stage 11

4.3 Short circuit detection 12

4.4 Output stage 12

5 Paralleling 13

6 Temperature measurement 14

7 Schematics and Layouts 16

7.1 Schematics 16

7.2 Layouts 18

8 Bill of Material of F3L020E07-F-P_EVAL 21

9 How to order the Evaluation Driver Board 22

10 Literature 22



The board described is an evaluation board dedicated for laboratory environment only. It operates at high voltages. This board must be operated by qualified and skilled personnel familiar with all applicable safety standards.

1 Introduction

The evaluation driver board F3L020E07-F-P_EVAL for 3-Level EconoPACK™ 4 modules as shown in Figure 1 was developed to support customers during their first steps designing applications with EconoPACK™ 4 3-Level modules. This evaluation board was designed in addition to the module adapter board MA3L080E07_EVAL [1] or could be a complementary part for an existing customer driver solution. For more details about the 3-Level topology, please refer to [1].

The board is available from Infineon in small quantities. The properties of this part are described in the datasheet chapter of this document, whereas the remaining paragraphs provide information intended to enable the customer to copy, modify and qualify the design for production, according to their own specific requirements.

Environmental conditions were considered in the design of the F3L020E07-F-P _EVAL. Components qualified for a lead-free reflow soldering process were selected. The design was tested as described in this document but not qualified regarding manufacturing and operation over the whole operating temperature range or lifetime.

The boards provided by Infineon are subjected to functional testing only.

Due to their purpose evaluation boards are not subjected to the same procedures regarding Returned Material Analysis (RMA), Process Change Notification (PCN) and Product Discontinuation (PD) as regular products.

See Legal Disclaimer and Warnings for further restrictions on Infineon's warranty and liability.

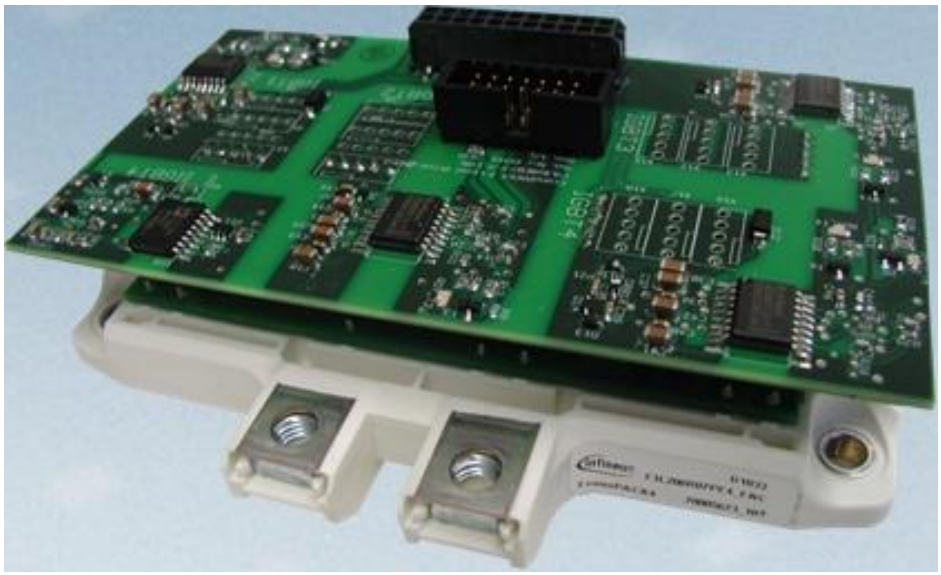

Figure 1: Evaluation Driver Board F3L020E07-F-P_EVAL, adapter board and EconoPACK™ 4 3-Level module as evaluation kit

[1] Evaluation Adapter Board for 3-Level EconoPACK™ 4 AN2011-04

1.1 Part Number explanation

Part number explanation:

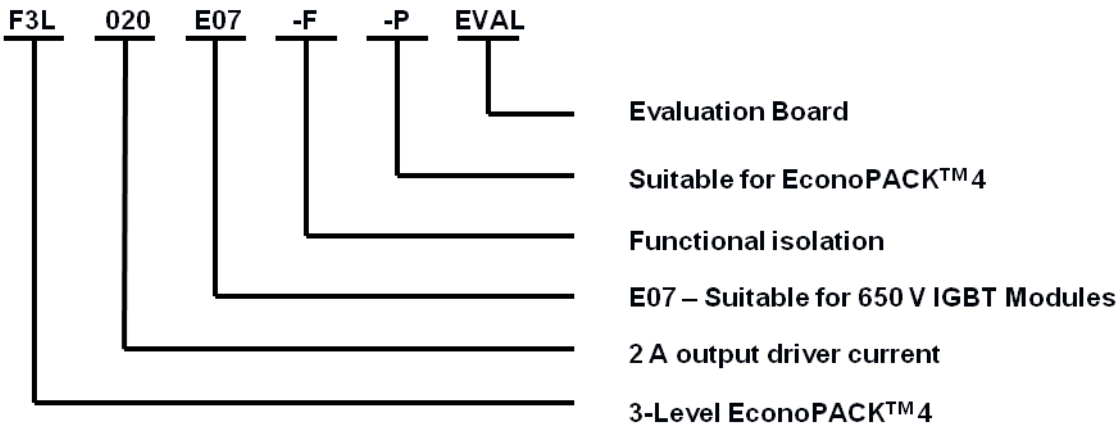

2 Design features

The following sections provide an overview of the board including main features, key data, pin assignments and mechanical dimensions.

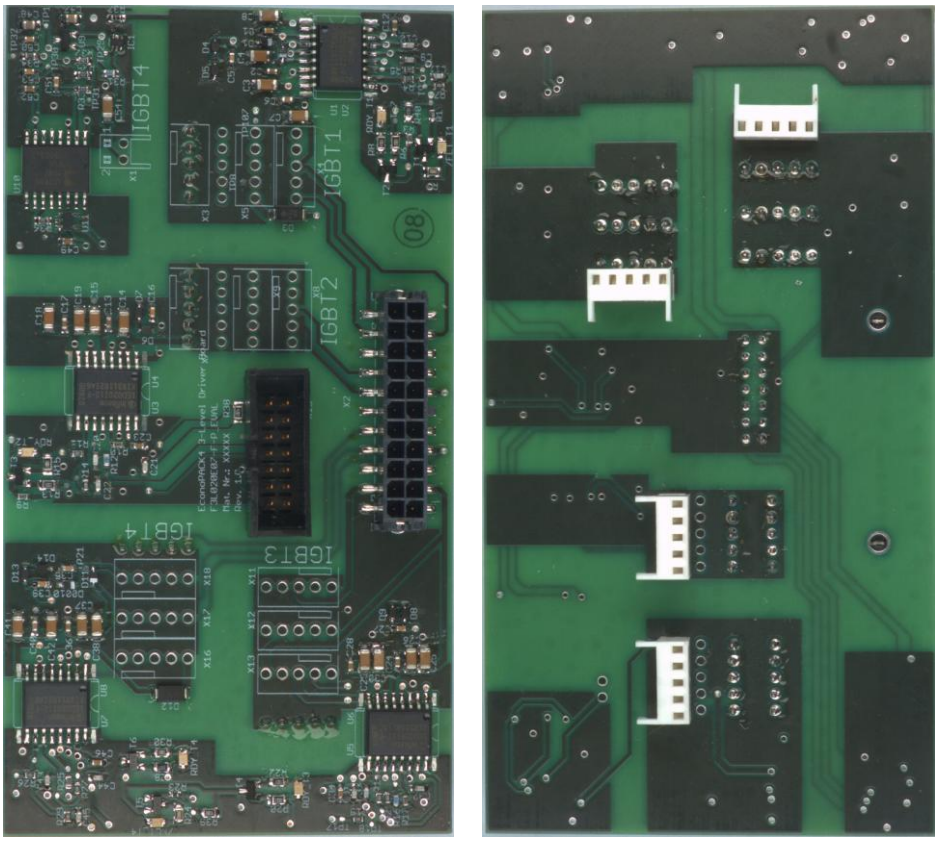

Figure 2: The Evaluation Driver Board F3L020E07-F-P_EVAL for EconoPACK™ 4 3-Level modules

The driver board F3L020E07-F-P_EVAL as presented in Figure 2 offers four independent channels to drive IGBTs. It is based on Infineon's 1ED020I12-F CoreLess Transformer driver IC.

The board operates as single module driver or as main driver for up to three IGBT modules in parallel configuration. The evaluation board is developed to operate in combination with the MA3L080E07_EVAL evaluation adapter board mounted in conjunction with a 3-Level EconoPACK™ 4 module. The F3L020E07-F-P_EVAL driver board provides:

- Functional isolation between logic and power side utilizing CoreLess Transformer technology.
- Short circuit protection and Under Voltage Lock Out (UVLO)
- Active clamping protection for the two IGBTs directly connected to the DC-bus bar.
- Bipolar power supply of the driver's secondary side with +15V/-8V
- Isolated IGBT DCB temperature measurement
- Positive or negative input logic with 5 V CMOS level for PWM, RDY and /FLT signals.

2.1 Key Data

General key data and characteristic values are given in Table 1. These are typical values, measured at an ambient temperature of T_{amb} = 25 °C.

Table 1: Electrical Parameters

Parameter	Description	Value	Unit
V_{DD}	IGBT driver positive supply voltage each channel	15	V
V_{EE}	IGBT driver negative supply voltage each channel	-8	V
I_{DD}+	IGBT driver positive supply current each channel	5	mA
I_{EE}-	IGBT driver negative supply current each channel	4	mA
U_{LS}	Logic power supply voltage	+5	V
I_{LOGIC}	Logic power supply current	100	mA
I_{OUT}	Maximum peak output current; each channel	2	A
t_{PDELAY}	Propagation delay time	200	ns
V_{DESAT}	Desaturation reference level	9	V
T_{op}	Operating temperature	-40...+85	°C

The EconoPACK™ 4 3-Level IGBT module has four series connected IGBTs. As a reference, Figure 3 presents the positions of the IGBTs with their designation used throughout this document.

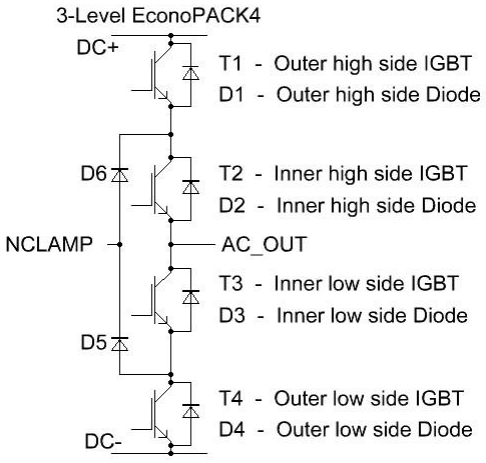

Figure 3: IGBT module with the designation of each IGBT

Figure 4 hints out the functional groups of the F3L020E07-F-P_EVAL evaluation board's top side.

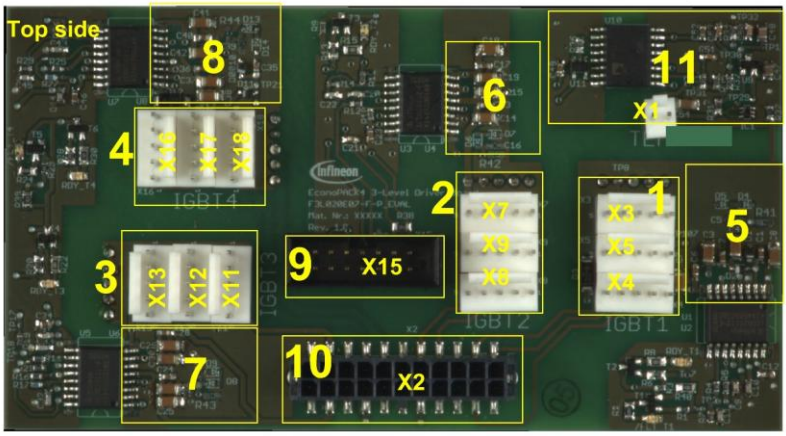

1: Connectors outer high side IGBT
2: Connectors inner high side IGBT
3: Connectors inner low side IGBT
4: Connectors outer low side IGBT
5: Power side outer high side IGBT
6: Power side inner high side IGBT
7: Power side inner low side IGBT
8: Power side outer low side IGBT
9: Logic connector
10: Power supply connector
11: Temperature measurements

Figure 4: Functional groups of the F3L020E07-F-P_EVAL evaluation board's top side

Figure 5 illustrates the functional groups of the F3L020E07-F-P_EVAL evaluation board's bottom side.

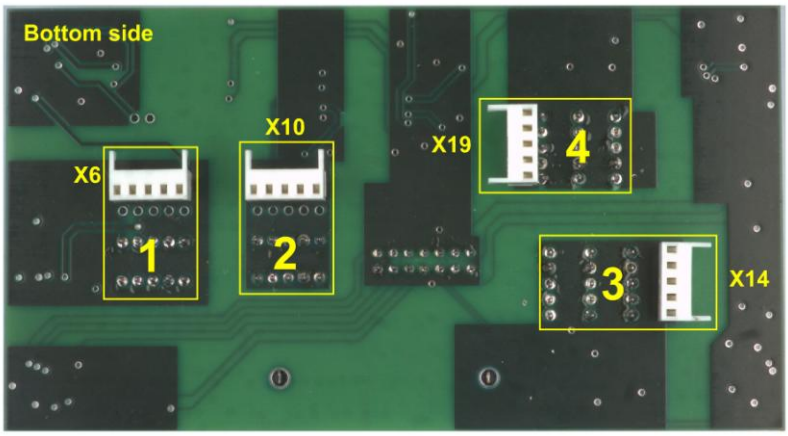

1: Connector outer high side IGBT
2: Connector inner high side IGBT
3: Connector inner low side IGBT
4: Connector outer low side IGBT

Figure 5: Functional groups of the F3L020E07-F-P_EVAL evaluation board's bottom side

3 Pin assignments

All PWM, logic signals and voltage supplies have to be applied as listed in Tables 2 to 5.

Table 2: Pin assignment of the connector X6 for the outer high side IGBT

Pin name	Pin function
X6-1	DESAT1
X6-2	OUT_T1
X6-3	-8V_T1
X6-4	GND_T1
X6-5	+15V_T1

For paralleling, connectors X3, X4 and X5 for the outer high side IGBT share a common pin assignment with the connector X6.

Table 3: Pin assignment of the connector X10 for the inner high side IGBT

Pin name	Pin function
X10-1	NC
X10-2	OUT_T2
X10-3	-8V_T2
X10-4	GND_T2
X10-5	+15V_T2

For paralleling, connectors X7, X8 and X9 for the inner high side IGBT share a common pin assignment with the connector X10.

Table 4: Pin assignment of the connector X14 for the inner low side IGBT

Pin name	Pin function
X14-1	NC
X14-2	OUT_T3
X14-3	-8V_T3
X14-4	GND_T3
X14-5	+15V_T3

For paralleling, connectors X11, X12 and X13 for the inner low side IGBT share a common pin assignment with the connector X14.

Table 5: Pin assignment of the connector X19 for the outer low side IGBT

Pin name	Pin function
X19-1	DESAT4
X19-2	OUT_T4
X19-3	-8V_T4
X19-4	GND_T4
X19-5	+15V_T4

For paralleling, connectors X16, X17 and X18 for the outer low side IGBT share a common pin assignment with the connector X19.

The connector pin assignment of X15 and X2 are listed in Table 6 and 7.

Table 6: Pin assignment of the logic connector X15

Pin name	Pin function
X15-1	+5V
X15-2	S_GND
X15-3	/RST
X15-4	/FLT_T1
X15-5	IN+_T1
X15-6	IN-_T1
X15-7	IN+_T2
X15-8	IN-_T2
X15-9	IN+_T3
X15-10	IN-_T3
X15-11	/FLT_T4
X15-12	IN+_T4
X15-13	IN-_T4
X15-14	TEMP

Table 7: Pin assignment of the power supply connector X2

Pin name	Pin function
X2-1	GND_T3
X2-2	NC
X2-3	-8V_T3
X2-4	+15V_T3
X2-5	NC
X2-6	NC
X2-7	GND_T4
X2-8	+15V_T4
X2-9	-8V_T4
X2-10	NC
X2-11	NC
X2-12	NC
X2-13	GND_T2
X2-14	+15V_T2
X2-15	-8V_T2
X2-16	NC
X2-17	NC
X2-18	NC
X2-19	+15V_T1
X2-20	-8V_T1
X2-21	GND_T1
X2-22	NC

3.1 Mechanical dimensions

The dimensions of the F3L020E07-F-P_EVAL Evaluation board are given in Figure 6.

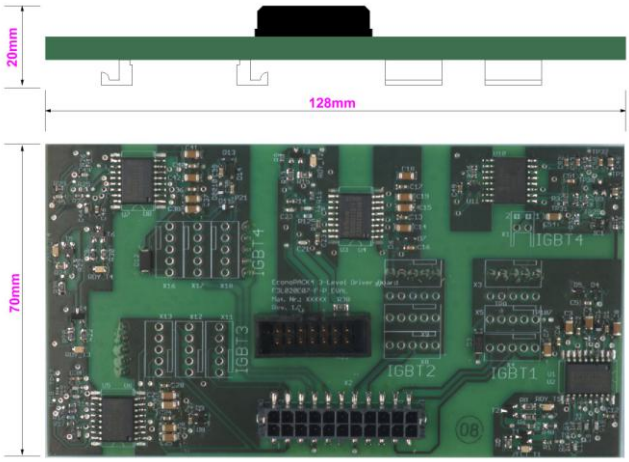

Figure 6: Mechanical dimensions of the F3L020E07-F-P_EVAL

4 Functionality of the board

The F3L020E07-F-P_EVAL driver board is a complementary part to the evaluation kit to drive one 3-Level IGBT Module as displayed in Figure 7. The adapter board should be pressed[2] to the EconoPACK™ 4.



Figure 7: Driver board, adapter board and IGBT module of the 3-level evaluation kit

4.1 Power supply

Four external power supplies for the IGBT driver ICs and external booster stages are needed. These -8V/+15V power supplies are applied to the F3L020E07-F-P_EVAL board using connector X2.

[2] Further assembly instructions of EconoPACK™ 4 can be found in AN2010-06

The logic side has to be powered with +5V via the connector X15, further pin assignments can be found in Table 6 and Table 7 on page 9.

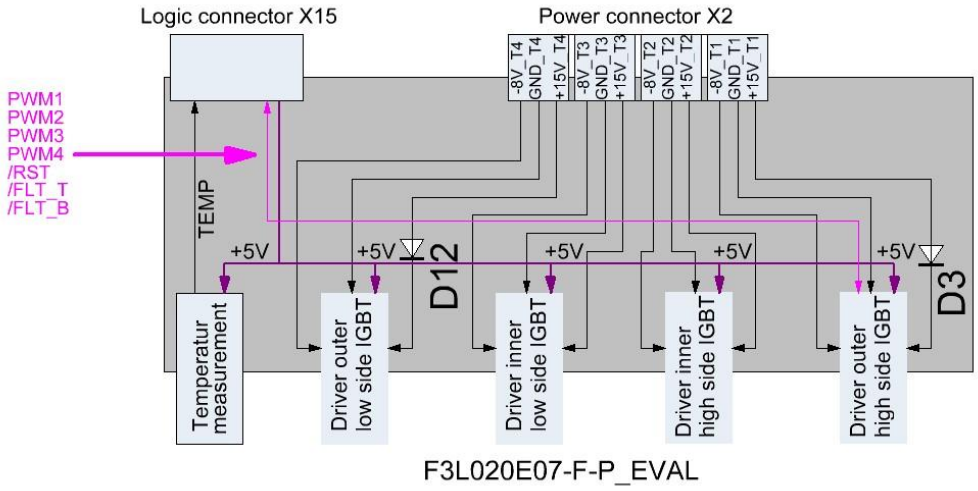

Figure 8: Principle diagram of the F3L020E07-F-P_ EVAL

The 1ED020I12-F[3] IGBT driver IC monitors the supply voltage and activates the UVLO as soon as the supply voltage drops below the UVLO reference value.

In order to assure a proper shutdown sequence of all IGBTs in case of an under-voltage of the driver ICs, it is important to turn off the outer high side and the outer low side IGBTs first. There are two high voltage blocking diodes D3 and D12 each in series with the according +15V power line of the outer high side and the outer low side IGBT drivers as can be seen in Figure 8. This generates an additional voltage drop so that the outer high side and the outer low side IGBT will be switched off first when their driver ICs detect an under-voltage.

4.2 Input stage

The Evaluation Driver Board is designed for one leg of a 3-Level IGBT configuration; therefore it is necessary to apply four separate PWM signals dedicated to each IGBT. Schematic details for a single IGBT driver are depicted in Figure 9.

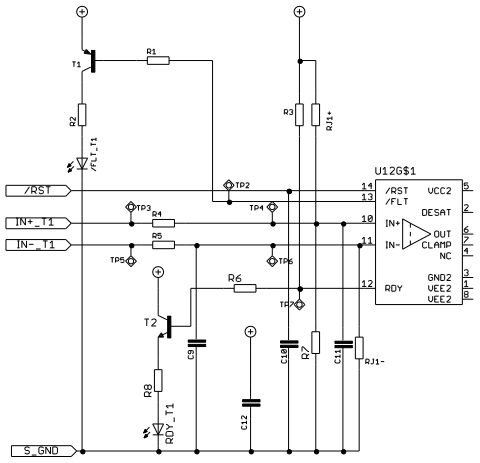

Figure 9: Schematic details of the input stage for a single IGBT driver.

[3] Infineon IGBT Gate Driver IC 1ED020I12-F

It is possible to choose positive or negative logic according to individual designs. For the use of IN+ as PWM input, the IN- pin needs to be connected to S_GND via RJ1- or it can be used as enable signal pin.

For the use of IN- pin as PWM input, the IN+ pin needs to be connected to +5V via RJ1+ or it can be used as enable signal pin.

If the power supply voltage of the logic side exceeds the power-up voltage V_{UVLOL1}[4] and the power supply voltage of the high side exceeds the power-up voltage V_{UVLOH2}[5], green RDY LEDs shown in Figure 10 for IGBT1 to IGBT4 are turned on.

4.3 Short circuit detection

Short circuit is monitored individually by the outer high side and outer low side driver channels. Each of the two channels provides an independent fault signal; they share a common reset input. Failure handling has to be part of the superordinated control.

When a short circuit occurs, the voltage increase across the IGBT is detected by the desaturation protection of the 1ED020I12-F and the IGBT is turned off. The fault is reported to the primary side of the driver as a low active signal. A red LED /FLT_T1 or /FLT_T4 as presented in Figure 10 is turned on to signalize the failure condition. The fault status remains active as long as there is no reset signal applied to the driver. The /FLT signal is active low.

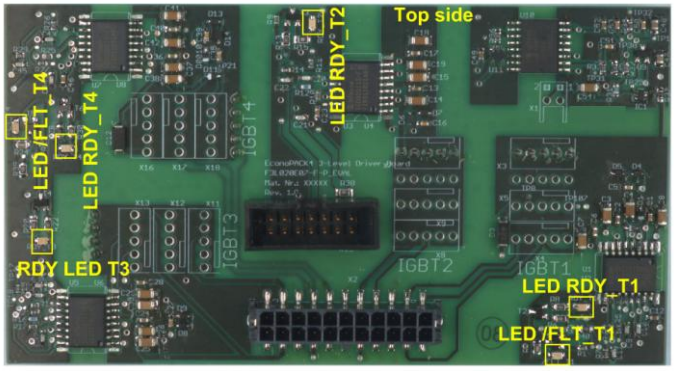

Figure 10: Positions of the status Leds on F3L020E07-F-P_EVAL

4.4 Output stage

The output stage of the F3L020E07-F-P_EVAL is prepared to be connected to the complementary MA3L080E07_EVAL evaluation module adapter directly plugged to the 3-level EconoPACK™ 4 module as shown in Figure 7 on page 10. The MA3L080E07_EVAL evaluation board consists of an active booster stage to provide the necessary switching power, demanded by the IGBT module.

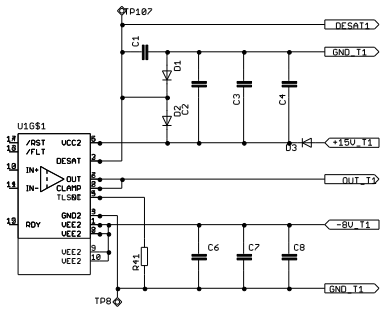

Figure 11: Schematic details of the output stage for a single IGBT driver

[4] Under Voltage Lockout Low side of 1ED020I12-F
[5] Under Voltage Lockout High side of 1ED020I12-F

5 Paralleling

The F3L020E07-F-P_EVAL was designed to work with the evaluation adapter board MA3L080E07_EVAL as single unit like depicted in Figure 7 on side 10 or to allow the parallel connection of up to three modules, each equipped with one MA3L080E07_EVAL adapter board as represented in Figure 12. In case of paralleling, the driver board doesn't need to be plugged into the complementary adapter board. The connection from the driver to the adapter boards is done utilizing the connectors on the top side of the driver board as shown in Figure 13.

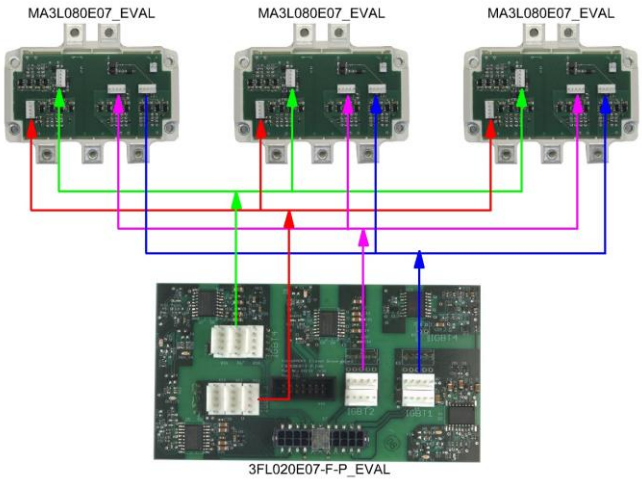

Figure 12: Principle of parallel connection of three EconoPACK™ 4 IGBT modules

Figure 13 displays a parallel connection of three 3-Level IGBT modules. In this case it is necessary to assure the same length of the gate cables between the driver and adapter boards to obtain the same run time of the gate signals for the three IGBTs. Star connection of the IGBTs reduces the cross flow in the Emitter lines after the switching sequence. The F3L020E07-F-P_EVAL driver board allows to switch up to three IGBTs in parallel.

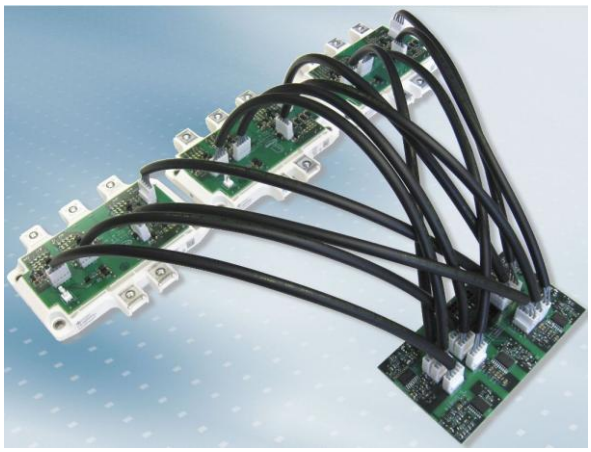

Figure 13: Three parallel connected EconoPACK™ 4 IGBT modules equipped with MA080E07_EVAL adapter boards driven by F3L020E07-F-P_EVAL driver board.

6 Temperature measurement

Based on the NTC built into the EconoPACK™ 4, the driver board offers IGBT base plate temperature measurement in the range of -40 °C…150 °C. The circuit of the temperature measurement on the evaluation driver boards works with a Sigma/Delta converter. Thus a digital signal is provided featuring the advantage that digital signal processing can be used without particular hardware efforts and that the subsequent error is low. However an analog signal can be produced with the circuit shown in Figure 14.

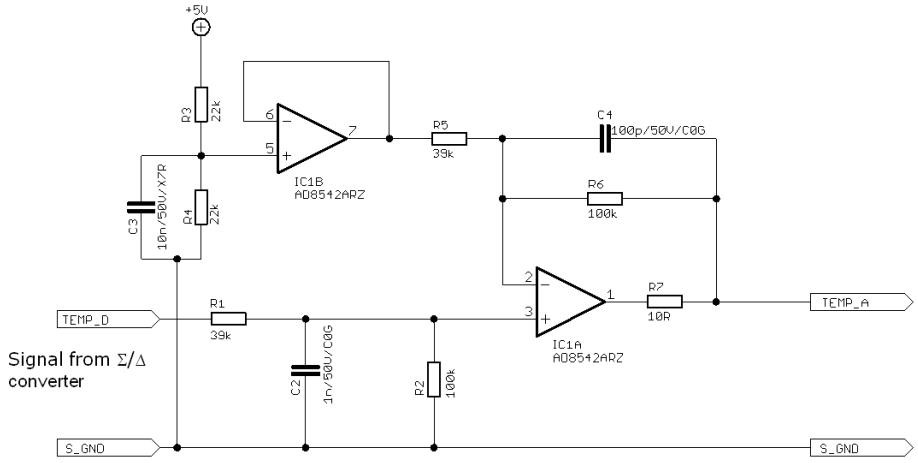

Figure 14: Schematic to convert the Σ/Δ data stream to analog voltage

Table 8: Bill of Material Σ/Δ to analog converter

Type	Qty	Value / Device	Package	Part Name	Recommended Manufacturer
Capacitor	1	100n/50V/X7R	C0603	C1	
Capacitor	1	1n/50V/C0G	C0603	C2	
Capacitor	1	10n/50V/X7R	C0603	C3	
Capacitor	1	100p/50V/C0G	C0603	C4	
Amplifier	1	AD8542ARZ	SOIC08	IC1	Analog Devices
Resistor	2	39k	R0603	R1, R5	
Resistor	2	100k	R0603	R2, R6	
Resistor	2	22k	R0603	R3, R4	
Resistor	1	10R	R0603	R7	

All electronic parts used in the design are lead-free and qualified for a 260 °C soldering profile. The tolerances for resistors should be less or equal to ±1 %, for capacitors of the type C0G less or equal to ±5 % and for capacitors of the type X7R less or equal to ±10 %.

Using the base plate temperature and a thermal model, the junction temperature can be estimated. The complexity of the thermal model needed for this purpose depends on application and heat sink conditions as well as on requirements regarding accuracy and dynamic response. In case of a broken wire the output shuts down to 0 V. The relation between output voltage and base plate temperature is shown in Figure 15.

Figure 15: Characteristics of the temperature measurement

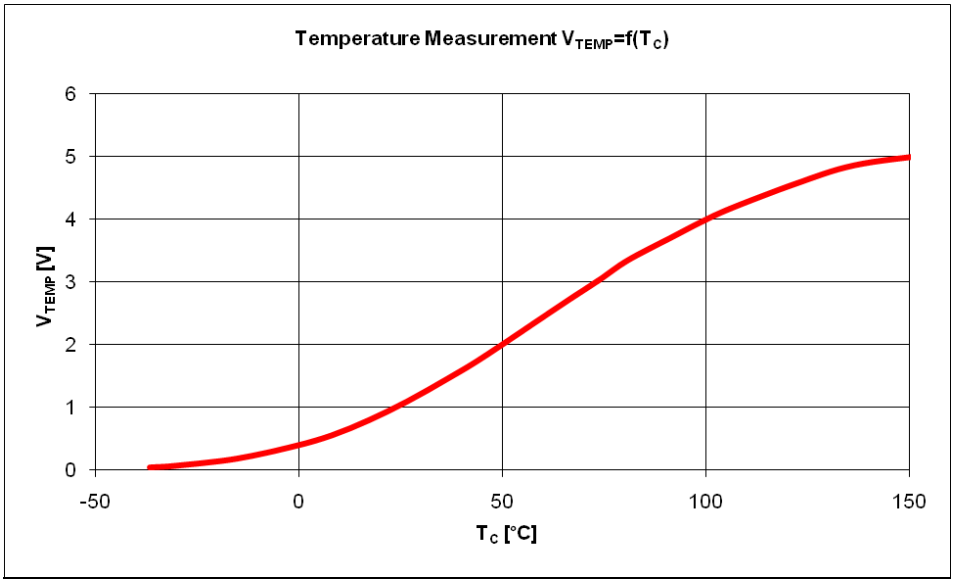

Note: This temperature measurement is not suitable for short circuit detection or short term overload, but may be used to protect the module from long term overload conditions or malfunction of the cooling system.

7 Schematics and Layouts

To meet the individual customer requirements and make the evaluation driver board for the EconoPACK™ 4 module simple for development or modification, all necessary technical data like schematic, layout and components are included in this chapter.

7.1 Schematics

Figure 16 depicts the driver circuit of the outer high side and the outer low side IGBT.

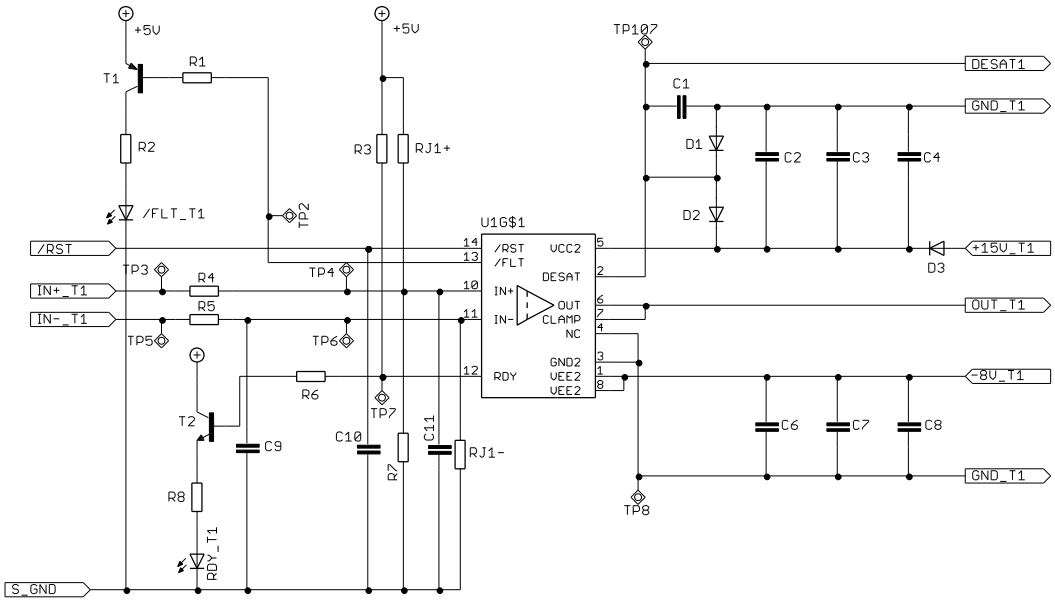

Figure 16: Driver schematic of the outer high side and the outer low side IGBT

Figure 17 illustrates the driver circuit of the inner high side and the inner low side IGBT.

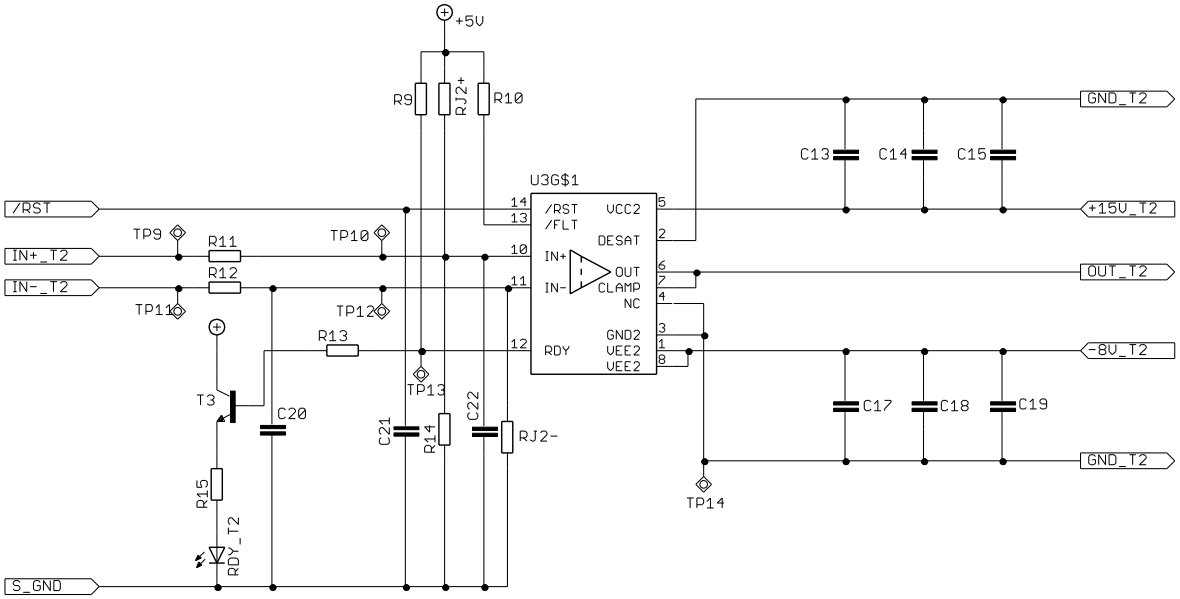

Figure 17: Driver schematic of the inner high side and the inner low side IGBT

Figure 18 shows the temperature measurement schematic with the Σ/Δ modulator.

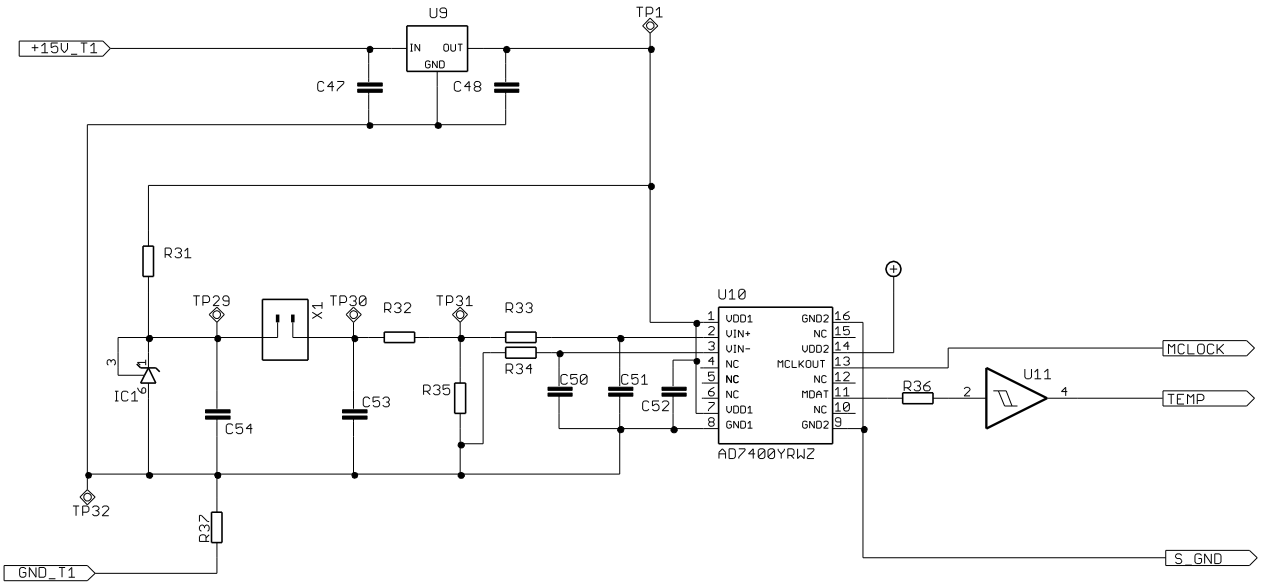

Figure 18: Temperature measurement

Figure 19 depicts the pin assignment of the power connector X2 and logic connector X15.

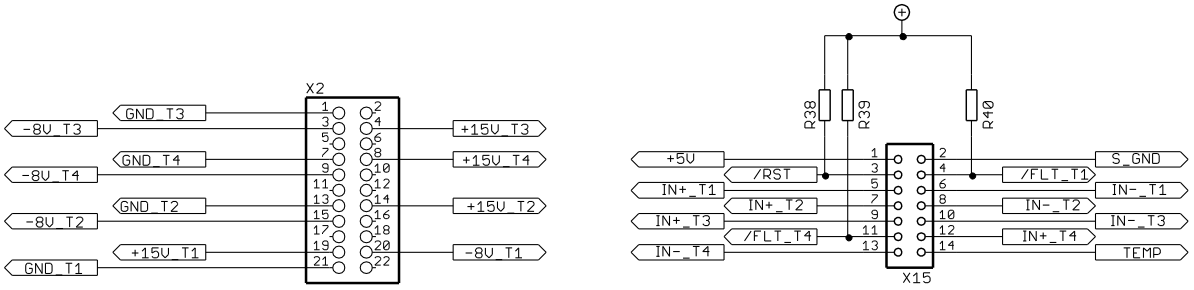

Figure 19: Power connector X2 and Logic connector X15

Figure 20 details the pin assignment of the IGBT gate connectors.

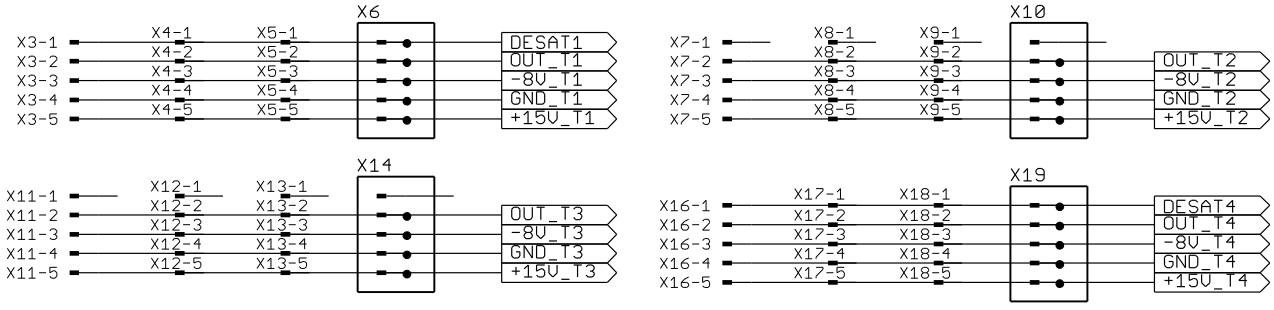

Figure 20: Gate signal connectors

7.2 Layouts

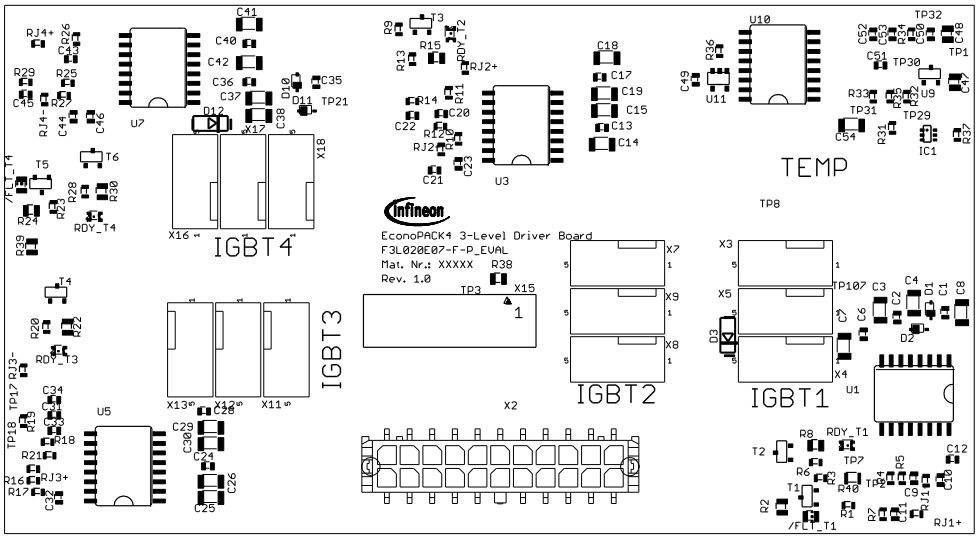

Figure 21: Components placed on the top side of the F3L020E07-F-P_EVAL

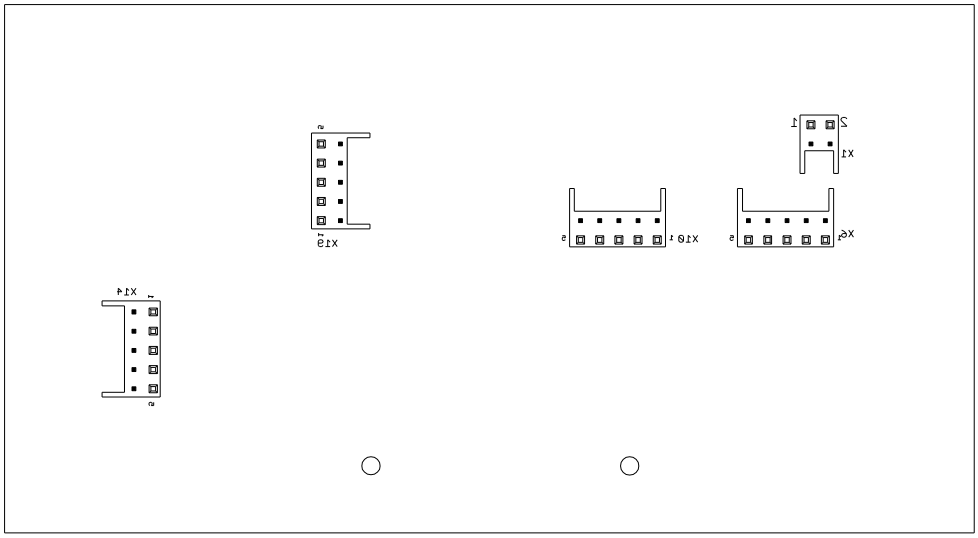

Figure 22: Components placed on the bottom side of the F3L020E07-F-P_EVAL

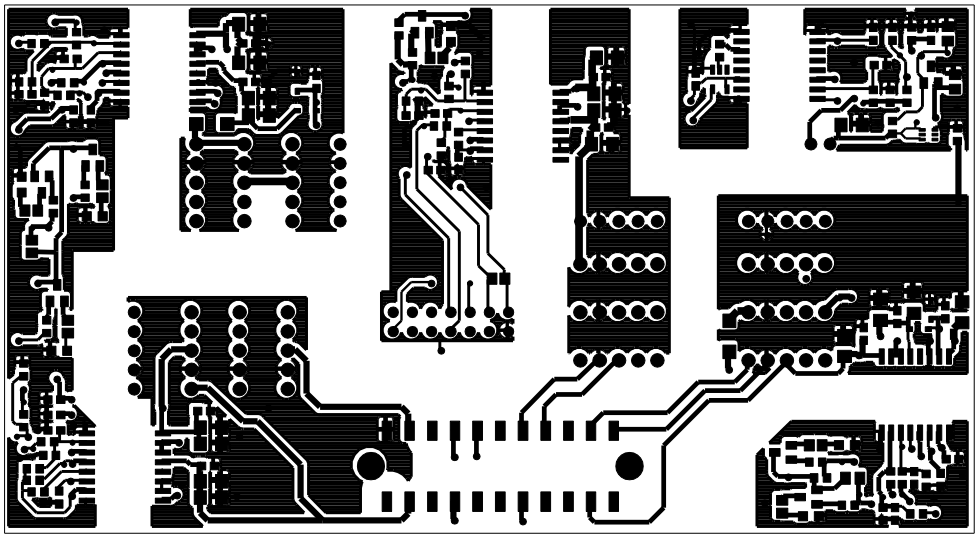

Figure 23: F3L020E07-F-P_EVAL Top Layer

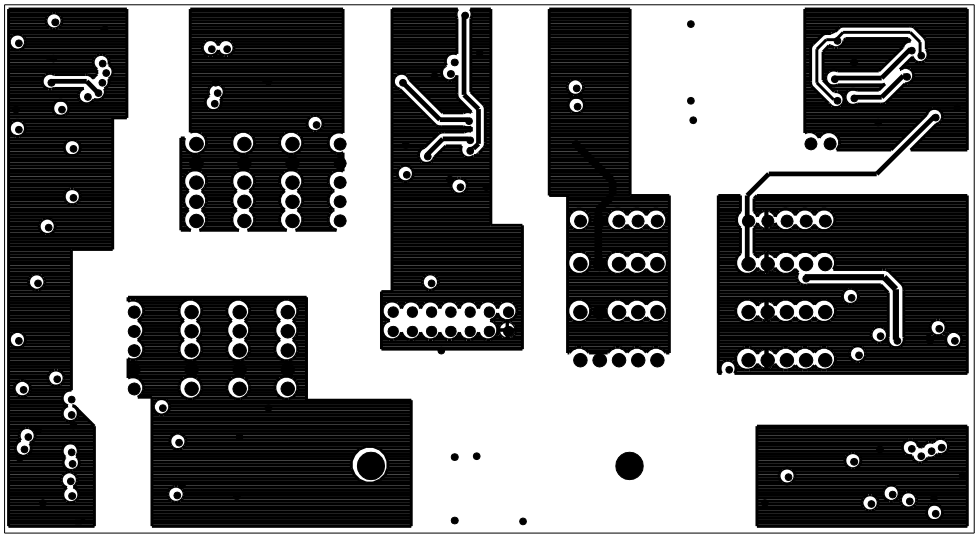

Figure 24: F3L020E07-F-P_EVAL Bottom Layer

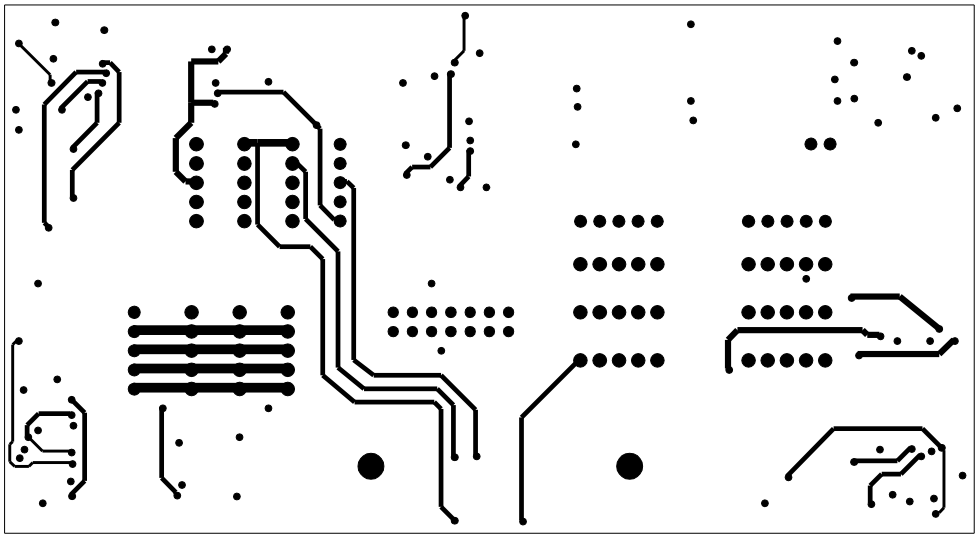

Figure 25: F3L020E07-F-P_EVAL Layer 2

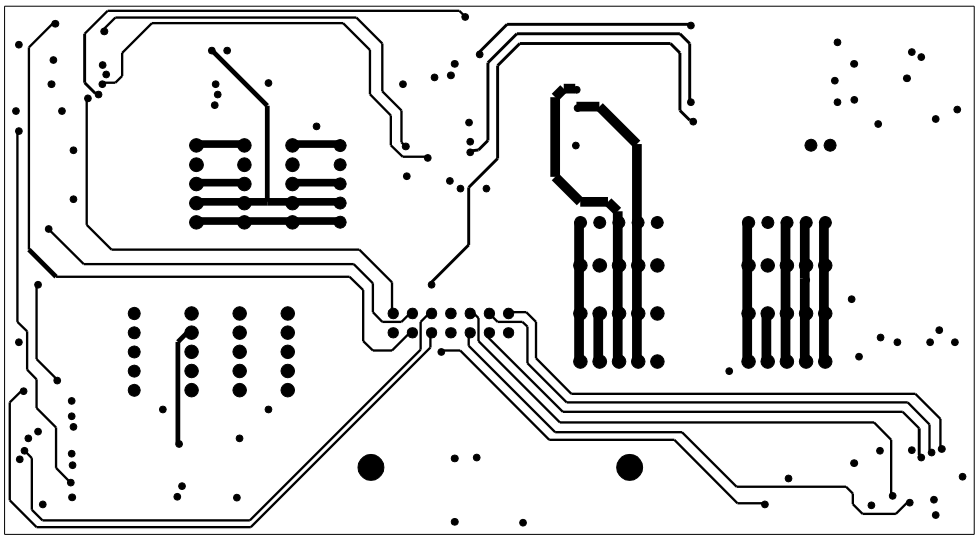

Figure 26: F3L020E07-F-P_EVAL Layer 3

8 Bill of Material of F3L020E07-F-P_EVAL

The bill of material includes a part list as well as assembly notes.

The tolerances for resistors should be less or equal to ±1 %, for capacitors of the type C0G less or equal to ±5 % and for capacitors of the type X7R less or equal to ±10 %.

Type	Value	Package	QTY	Name Part	Recommended Manufacturer
Resistor	0R0	R0603	9	R37, RJ1+, RJ1- RJ2+, RJ2-, RJ3+, RJ3-, RJ4+, RJ4-	-
Resistor	39R	R0805	2	R2, R24	-
Resistor	100R	R0603	8	R4, R5, R11, R12, R18, R19, R26, R27	-
Resistor	270R	R0603	1	R35	-
Resistor	820R	R0603	1	R32	-
Resistor	1k	R0805	4	R8, R15, R22, R30	-
Resistor	1k2	R0603	1	R31	-
Resistor	2k2	R0603	2	R33, R34	-
Resistor	4k7	R0603	6	R3, R9, R10, R16, R17, R25	-
Resistor	4k7	R0805	3	R38, R39, R40	-
Resistor	10k	R0603	10	R1, R6, R7, R13, R14, R20, R21, R23, R28, R29	-
Resistor	39k	R0603	1	R36	-
Capacitor	4µ7/25V/X7R	C1206	17	C3, C4, C7, C8, C14, C15, C18, C19, C25, C26, C29, C30 , C37, C38, C41, C42, C54	Murata
Capacitor	1µ/25V/X7R	C0805	2	C47, C48	Murata
Capacitor	100n/50V/X7R	C0603	14	C2, C6, C12, C13, C17, C23, C24, C28, C34, C36, C40, C46, C49, C52	Murata
Capacitor	10n/50V/X7R	C0603	3	C50, C51, C53	Murata
Capacitor	100p/50V/C0G	C0603	4	C11, C22, C33, C45	Murata
Capacitor	220p/50V/C0G	C0603	2	C1, C35	Murata
Capacitor	470p/50V/X7R	C0603	4	C10, C21, C32, C44	Murata
Semiconductor	BAT165	SOD323R	4	D1, D2, D10, D11	Infineon
Semiconductor	ES1D	DO214AC	2	D3, D12	Vishay
Semiconductor	BC846	SOT23	4	T2, T3, T4, T6	-
Semiconductor	BC856	SOT23	4	T1, T5	-
Semiconductor	1ED020I12-F	P-DSO-16	4	U1, U3, U5, U7	Infineon

Type	Value / Type	Package	QTY	Name Part	Recommended Manufacturer
Semiconductor	ZMR500FTA	SOT23	1	U9	Diodes
Semiconductor	AD7400YRWZ	P-DSO-16	1	U10	-
Semiconductor	SN74LVC1G17DB	SOT23-5	1	U11	-
Semiconductor	TLV431BIDCKT	SC70-6L	1	IC1	-
Semiconductor	LEDCHIPLED_GREEN	0805	4	RDY_T1, RDY_T2, RDY_T3, RDY_T4,	-
Semiconductor	LEDCHIPLED_RED	0805	2	/FLT_T1, /FLT_T4	-
Connector	TYCO / AMP 1-1634688-4		1	X15	TYCO / AMP
Connector	MOLEX 22022025	4455-2	1	X1	Molex
Connector	MOLEX 43045-2216	MICROFIT	1	X2	Molex
Connector	MOLEX 22022055	4455-5	4	X6, X10, X14, X19	Molex
Connector	MOLEX 22232051	PITCH KK	12	X3, X4, X5, X7, X8, X9, X11, 12, X13, X16, X17, X18	Molex

9 How to order the Evaluation Driver Board

Every evaluation driver board has its own IFX order number and can be ordered via your Infineon sales partner.

Information can also be found at the Infineon Web Page: www.infineon.com

CAD-data for the board described here are available on request. The use of this data is subjected to the disclaimer given in this AN. Please contact: WAR-IGBT-Application@infineon.com

IFX order number for F3L020E07-F-P_EVAL: 36294

IFX order number for MA3L080E07_EVAL: 36293

10 Literature

[1] Zhang Xi, Uwe Jansen, Holger Rüthing: 'IGBT power modules utilizing new 650V IGBT3 and Emitter Controlled Diode3 chips for 3-Level converter' ISBN: 978-3-8007-3158-9 Proceedings PCIM Europe 2009 Conference

[2] Infineon Technologies, AN2009-10, 'Using the NTC inside a power electronic module', www.infineon.com

[3] Infineon Technologies, AN2011-04, 'Evaluation Module Adapter Board for 3-Level EconoPACK™ 4', www.infineon.com