AN2007-03

7ED020E12-FI-W2

Evaluation Board for EasyPIM®2B Modules with 2ED020I12-FI gate driver ICs

Power Management and Drives

eupec
An Infineon brand

Infineon
Never stop thinking

Edition 2008-02-26

Published by
Infineon Technologies AG
81726 München, Germany

© Infineon Technologies AG 2008.
All Rights Reserved.

Attention please!

THE INFORMATION GIVEN IN THIS APPLICATION NOTE IS GIVEN AS A HINT FOR THE IMPLEMENTATION OF THE INFINEON TECHNOLOGIES COMPONENT ONLY AND SHALL NOT BE REGARDED AS ANY DESCRIPTION OR WARRANTY OF A CERTAIN FUNCTIONALITY, CONDITION OR QUALITY OF THE INFINEON TECHNOLOGIES COMPONENT. THE RECIPIENT OF THIS APPLICATION NOTE MUST VERIFY ANY FUNCTION DESCRIBED HEREIN IN THE REAL APPLICATION. INFINEON TECHNOLOGIES HEREBY DISCLAIMS ANY AND ALL WARRANTIES AND LIABILITIES OF ANY KIND (INCLUDING WITHOUT LIMITATION WARRANTIES OF NON-INFRINGEMENT OF INTELLECTUAL PROPERTY RIGHTS OF ANY THIRD PARTY) WITH RESPECT TO ANY AND ALL INFORMATION GIVEN IN THIS APPLICATION NOTE.

Information

For further information on technology, delivery terms and conditions and prices please contact your nearest Infineon Technologies Office (**www.infineon.com**).

Warnings

Due to technical requirements components may contain dangerous substances. For information on the types in question please contact your nearest Infineon Technologies Office.

Infineon Technologies Components may only be used in life-support devices or systems with the express written approval of Infineon Technologies, if a failure of such components can reasonably be expected to cause the failure of that life-support device or system, or to affect the safety or effectiveness of that device or system. Life support devices or systems are intended to be implanted in the human body, or to support and/or maintain and sustain and/or protect human life. If they fail, it is reasonable to assume that the health of the user or other persons may be endangered.

AP99007		
Revision History:	2007-09	V1.0
Previous Version:	none	

Page	Subjects (major changes since last revision)
all	First release

Author : Zhang Xi (IFAG AIM PMD ID AE)

We Listen to Your Comments

Any information within this document that you feel is wrong, unclear or missing at all?
Your feedback will help us to continuously improve the quality of this document.
Please send your proposal (including a reference to this document) to:

[IGBT.Application@infineon.com]



Table of contents

1	**Introduction**	**5**
2	**Design features**	**6**
2.1	Main features	6
2.2	Pin assignment	6
2.3	Mechanical dimension	7
3	**Application note**	**8**
3.1	Switching behavior	9
3.2	Over and short circuit current protection	10
3.3	Brake chopper	11
3.4	Over temperature protection	11
3.5	/Fault output	11
3.6	RMS current and DC link voltage limits	12
3.7	Indication of the surge current at turning on of the board	12
3.8	Cooling condition	12
4	**Schematic, Layout and Bill of Material**	**12**
4.1	Schematic	12
4.2	Layout	15
4.3	Bill of material	16
5	**How to order the evaluation board**	**17**

Part number explanation

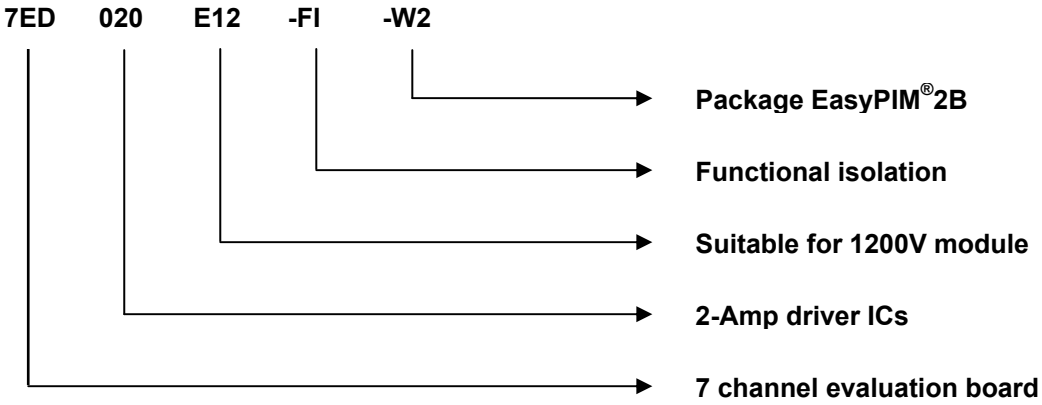

Warnings



The described board is an evaluation board dedicated for laboratory environment only. It operates at high voltages. There is no galvanic isolation between the high voltage side and any part of the board. This board must be operated by qualified, skilled personal conversant with all applicable safety standards.

1 Introduction

The Evaluation Driver Board 7ED020E12-FI-W2 for EasyPIM®2B modules as can be seen in Figure 1 was developed to support customers during their first steps designing applications with these modules. The basic version of the board is available from Infineon in small quantities. The properties of these parts are described in the datasheet chapter of this document whereas the remaining paragraphs provide information intended to enable the customer to copy, modify and qualify the design for production, according to his specific requirements.

The design of the 7ED020E12-FI-W2 was performed with respect to the environmental conditions described as design target in the datasheet part. The requirements of RoHS compliance have been considered when components were selected. The design was tested as described in this documentation but not qualified regarding manufacturing and operation in the whole operating ambient temperature range or lifetime.

The boards provided by Infineon are subjected to functional testing only.

Due to their purpose Evaluation Boards are not subjected to the same procedures regarding Returned Material Analysis (RMA), Process Change Notification (PCN) and Product Withdraw (PWD) as regular products.

See Legal Disclaimer and Warnings for further restrictions on Infineons warranty and liability.



Figure 1 The Evaluation Board 7ED020E12-FI-W2 with EasyPIM®2B mounted on the back side

2 Design features

The following sections provide an overview of the boards including main features, key data, pin assignments and mechanical dimensions.

2.1 Main features

The Evaluation Board 7ED020E12-FI-W2 contains four coreless transformer ICs 2ED020I12-FI from Infineon and one Infineon EasyPIM®2B module, which contains a B6 diode rectifier, a brake chopper and an six IGBTs for the inverter. Figure 2 shows the functional groups of the evaluation board.

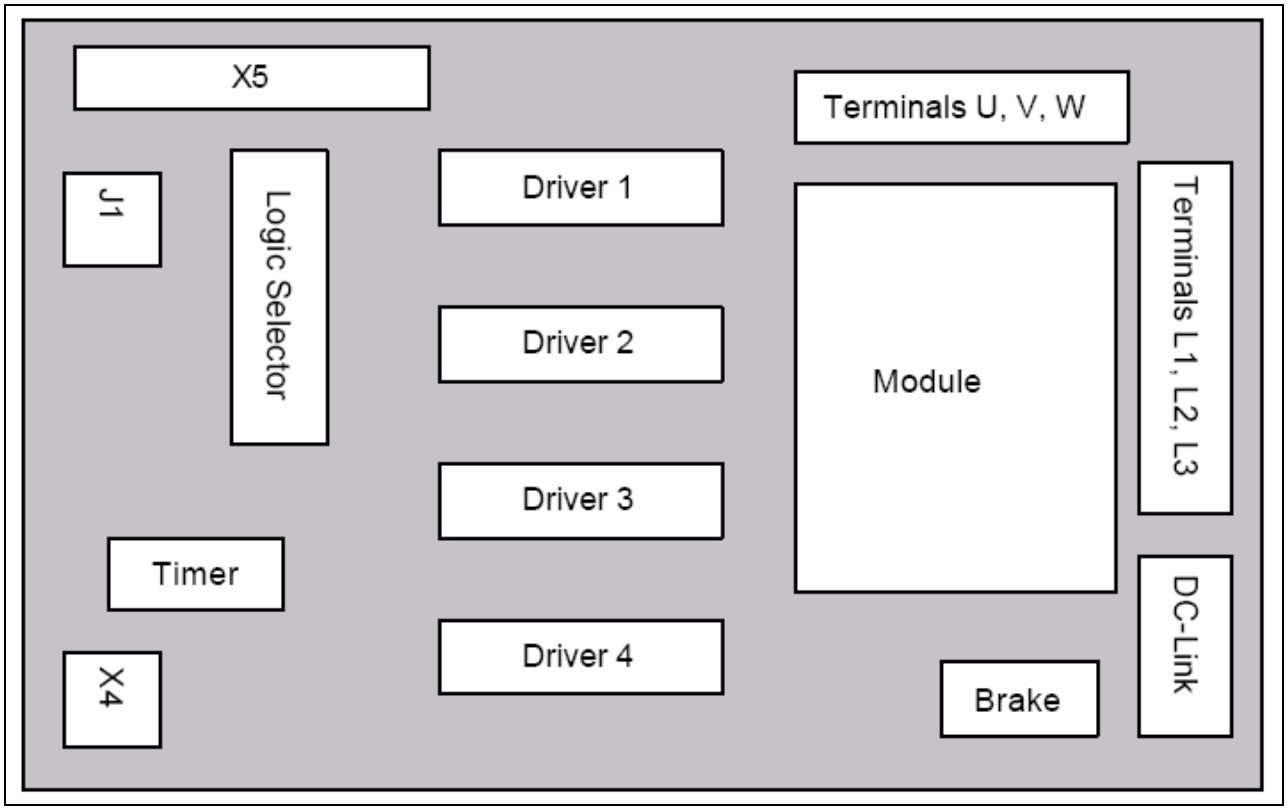

Figure 2 Functional groups of the evaluation board 7ED020E12-FI-W2

The Evaluation board provides following main features:

- Rectifier, brake chopper and inverter integrated in one EasyPIM®2B module.
- Functional isolation between high side and low side with coreless transformer technology.
- Short circuit and over current protection.
- Over temperature protection.
- Over voltage protection.

2.2 Pin assignment

All the PWM signals and voltage supplies should be applied to the connectors X4 and X5. In the following table the pin assignment is given:

Table 1 Pin assignment of the connectors X4 and X5

Pin name	Pin function
X5-1	PWM_TOP_U
X5-2	PWM_BOT_U
X5-3	PWM_TOP_V
X5-4	PWM_BOT_V
X5-5	PWM_TOP_W
X5-6	PWM_BOT_W
X5-7	Enable
X5-8	/Fault output
X5-9	GND
X4-1	Power supply 15V
X4-2	GND

2.3 Mechanical dimension

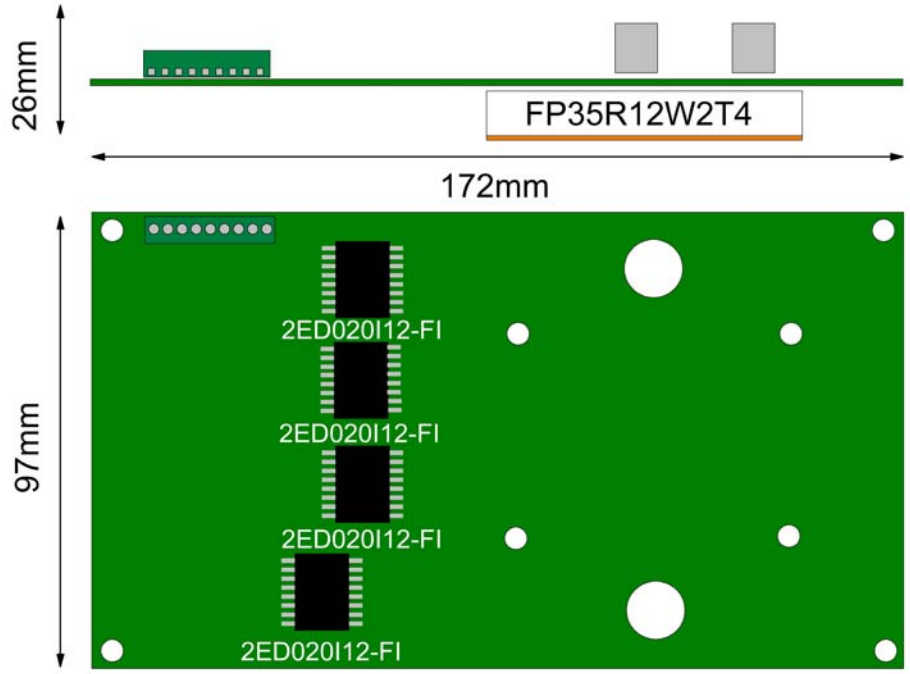

Figure 3 Mechanical dimension of 7ED020E12-FI-W2

3 Application note

The evaluation board is powered by an external single power supply of +15 V at connector X4. A linear voltage regulator (IC7) provides from this source a second supply voltage of 5 V for the logic selector (IC5, IC6), timer (IC8), and comparators of IC1 to IC4. By default boot-strap circuits provide power to the high-side IGBT drivers. The connectors X1, X2 and X3 offer the option of using three external power supplies for the high-side drivers instead of the boot-strap circuits.
The EasyPIM®2B terminals EU, EV, EW and NB are shorted and connected through a shunt resistor R8 to the negative DC link voltage. Also GND for the drivers and peripheral electronic is connected to the negative DC link voltage. There is no galvanic isolation of common GND and negative DC link voltage.
The logic selector (IC5, IC6) consists of two 74AC86 and sets the Active HIGH/LOW logic of the PWM inputs and the Enable signal for the drivers according to Table 1. The selection for either active HIGH or Active LOW logic is done by jumper J1. An external Enable signal at connector X5-7 is needed to turn on the drivers. In case the driver stages are not enabled, the timer output (IC8, Pin 3) has always HIGH state, which forces all drivers to shutdown through Q2 by a LOW signal at input /SD.
The following table shows the truth table for the active high/low configuration:

Table 2 Activ Low/High settings

µController	J1	X5-7 (Enable)	OutL, OutH
X5-1…X5-6=0	Jumper on pin 1-2 (Active LOW)	0	1
X5-1…X5-6=0	Jumper on pin 1-2 (Active LOW)	1	0
X5-1…X5-6=0	Jumper on pin 2-3 (Active HIGH)	0	0
X5-1…X5-6=0	Jumper on pin 2-3 (Active HIGH)	1	0
X5-1…X5-6=1	Jumper on pin 1-2 (Active LOW)	0	0
X5-1…X5-6=1	Jumper on pin 1-2 (Active LOW)	1	0
X5-1…X5-6=1	Jumper on pin 2-3 (Active HIGH)	0	0
X5-1…X5-6=1	Jumper on pin 2-3 (Active HIGH)	1	1

Furthermore the electronic is constantly monitoring for short circuits, over currents and over temperature. In the event of a fault the timer input will be triggered (IC8, Pin 2) by a HIGH to LOW transition and sets the timer output (IC8, Pin 3) to HIGH. This HIGH signal will switch on Q1 and Q2. Q1 will signal the fault to Pin X5-8 (open-collector output) and Q2 will shutdown all drivers through the /SD input. The timer output will be reset to LOW defined by a delay time t = R20 • C23. In case the LOW signal at the trigger input remains the timer will wait until the trigger input receives a HIGH signal.

3.1 Switching behavior

The switching characterization with module FP35R12W2T4 was done using double pulse test. The following figures show the switching behavior at nominal current of 35A. The test was done at 25°C, 125°C and 150°C, 600V DC link voltage and 12Ω gate resistor conditions.

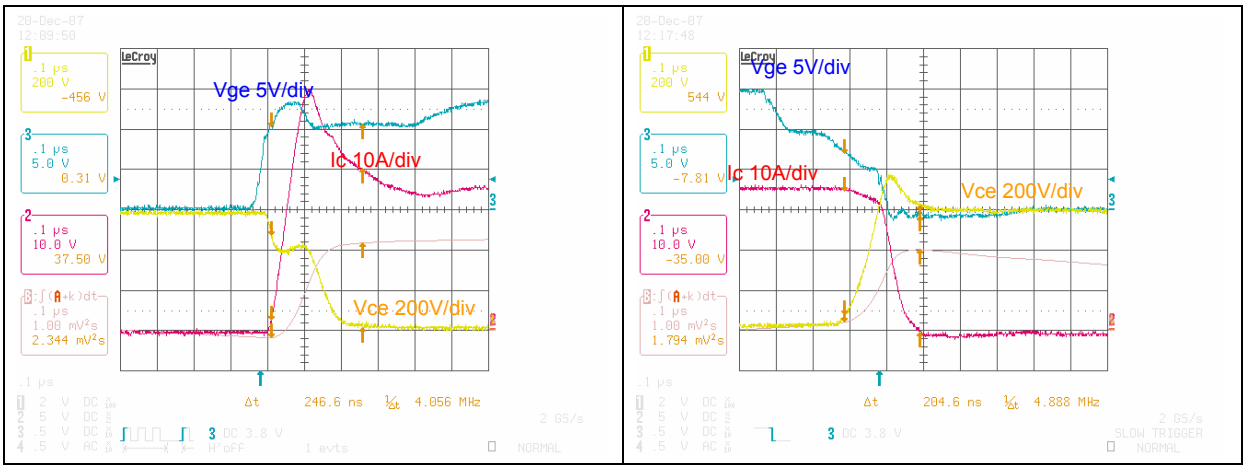

Figure 4 Turn on (left) and turn off (right) with FP35R12W2T4 behavior @25°C

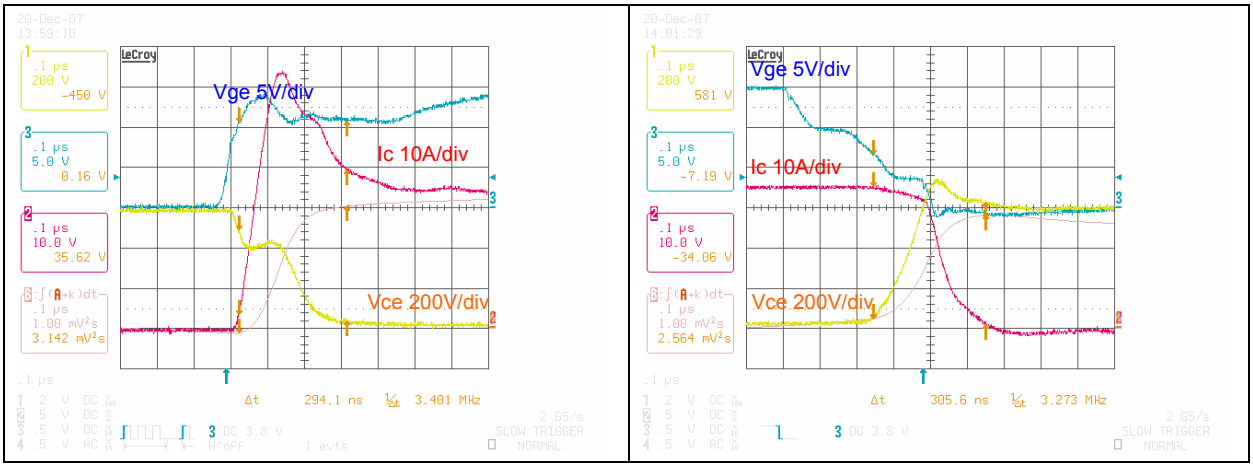

Figure 5 Turn on (left) and turn off (right) with FP35R12W2T4 behavior @125°C

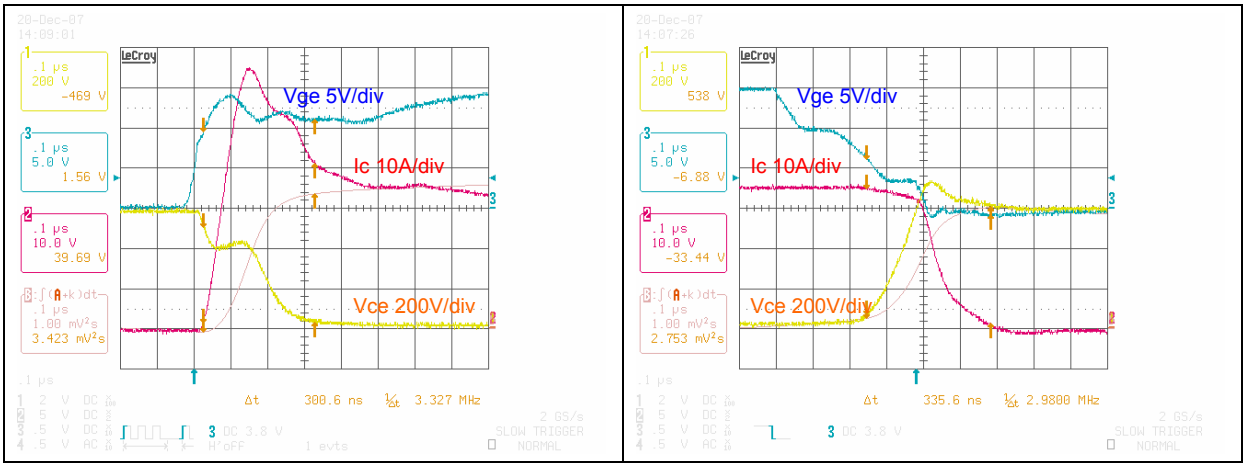

Figure 6 Turn on (left) and turn off (right) with FP35R12W2T4 behavior @150°C

With the diagram the switching losses Eon and Eoff at 25°C, 125°C and 150°C can now be calculated.

Table 3 Switching energy with FP35R12W2T4

Temperature	Eon	Eoff
@25°C	2.3mJ	1.8mJ
@125°C	3.1mJ	2.6mJ
@150°C	3.4mJ	2.8mJ

The switching losses are comparable with the values in listed in the datasheet.

Furthermore there is no parasitic switching on to be observed in the turn on transient.

3.2 Over and short circuit current protection

The shunt resistor voltage is filtered by an RC circuit (R19, C21) and forwarded to OP3[1] and OP4. OP3 is configured as non-inverting amplifier; OP4 is configured as inverting amplifier. Diode D12 and D13 are used to detect the maximum of both amplifier outputs. Therefore over current-protection is provided as well for positive DC-link current and for negative DC-link current. CP3 compares the voltage from amplifier OP3 to a reference voltage for over-current measurement, whereas CP4 detects short circuit-currents. The basic difference between CP3 and CP4 is the different reference voltage and time constant of the input RC-filters. In case the measured over- or short-circuit-current passes the threshold the associated comparator output turns LOW and triggers the timer input (IC8, Pin 2).
A typical short circuit test was done:

[1] The OP3 means the operation amplifier integrated in IC3. The same designation is used for the other CPs and OPs.

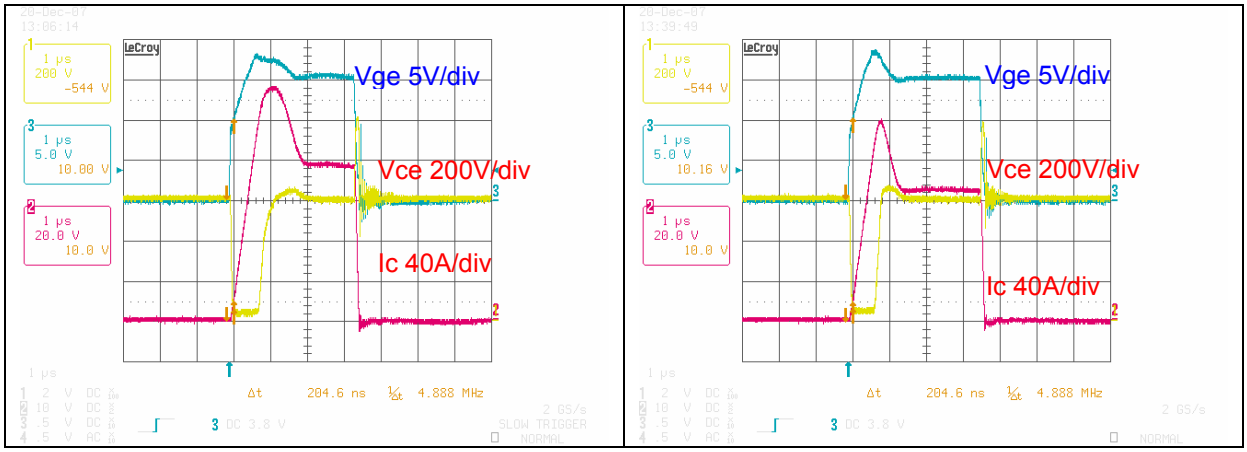

Figure 7 Short circuit test @25°C (left) and @125°C (right)

To change the threshold of the over-current detection the reference voltage of CP3 has to be modified, i.e. increasing (decreasing) of R27 will increase (decrease) the threshold. To change the threshold time the RC circuit of R25 and C33 has to be modified, e.g. increasing (decreasing) of R25 will increase (decrease) the time.
To change the threshold of the short-circuit-current detection the reference voltage of CP4 has to be modified, i.e. increasing (decreasing) of R29 will increase (decrease) the threshold. To change the threshold time the RC circuit of R26 and C34 has to be modified, e.g. increasing (decreasing) of R26 will increase (decrease) the time.

3.3 Brake chopper

The DC link voltage is scaled down to a low voltage by resistors R36 to R44. The resulting voltage is compared by CP2 with a reference voltage. In case the DC link voltage is above the threshold, the output drives the low-side driver of IC4, which turns on the gate of the brake chopper. CP2 has a hysteresis defined by R47. To change the threshold for the brake chopper DC link voltage detection the reference voltage of CP2 has to be modified, i.e. increasing (decreasing) of R46 will increase (decrease) the threshold. The upper and lower threshold is defined by R47.

3.4 Over temperature protection

Based on the built-in NTC in the module the bottom copper plane temperature will be monitored and in case of over temperature the driver will be shut down.

The NTC together with R31 build a voltage divider, the voltage will be fed to the CP1 and compared with a reference voltage defined by the voltage divider consisting of R32 and R33. In case of over temperature the output of CP1 will be switched to low and triggers the timer input to switch down the drivers.

Notice: This temperature measurement is not suitable for short circuit detection or short term overload and may be used to protect the module from long term overload conditions or malfunction of the cooling system.

3.5 /Fault output

In case of short circuit, over current or over temperature the /Fault Pin (X5-8) will be switched to low to report an error to the microcontroller. After a definable delay time t=R20*C23 the driver will be switched on again if the fault condition does not exist anymore. So in case of fault condition, it is very important that the microcontroller is informed about the error and has been programmed to perform suitable actions.

3.6 RMS current and DC link voltage limits

The RMS current of the board is limited to be 10A.

The maximum DC link voltage is limited to be 800V. With a brake resistor connected, the brake chopper will limit the DC link voltage according to the set point as described in section 3.3.

3.7 Indication of the surge current at turning on of the board

The board has built-in thermistors to prevent the rectifier diodes from the surge current at plugging in. Once the board is plugged into the power supply with the thermistors being still cold, the input current will be limited. After a while, the thermistors will get hot and the resistance decrease to provide a low impedance power supply for the board.

Notice: **After a while of operation, the thermistors are getting hot and have a low resistance value. If the board is disconnected from the power supply and is connected again immediately, it is possible to damage the rectifier diodes with large surge current.**

3.8 Cooling condition

The board is provided without heat sink. However, a heat sink is necessary for the proper operation of the board. For dimension of heat sink, it is recommended to refer to the software IPOSIM from Infineon.

4 Schematic, Layout and Bill of Material

In the following sections the schematic, layout and bill of material of 7ED020E12-FI-W2 will be provided.

4.1 Schematic

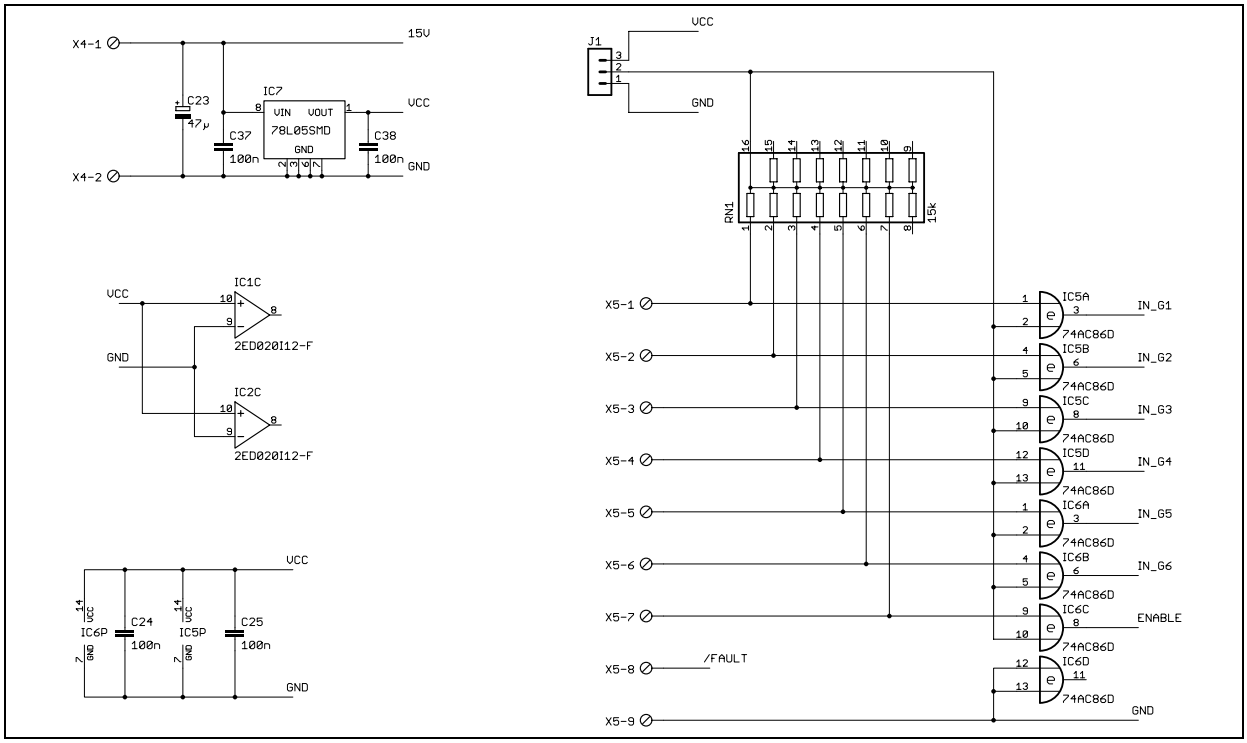

Figure 8 Input stage

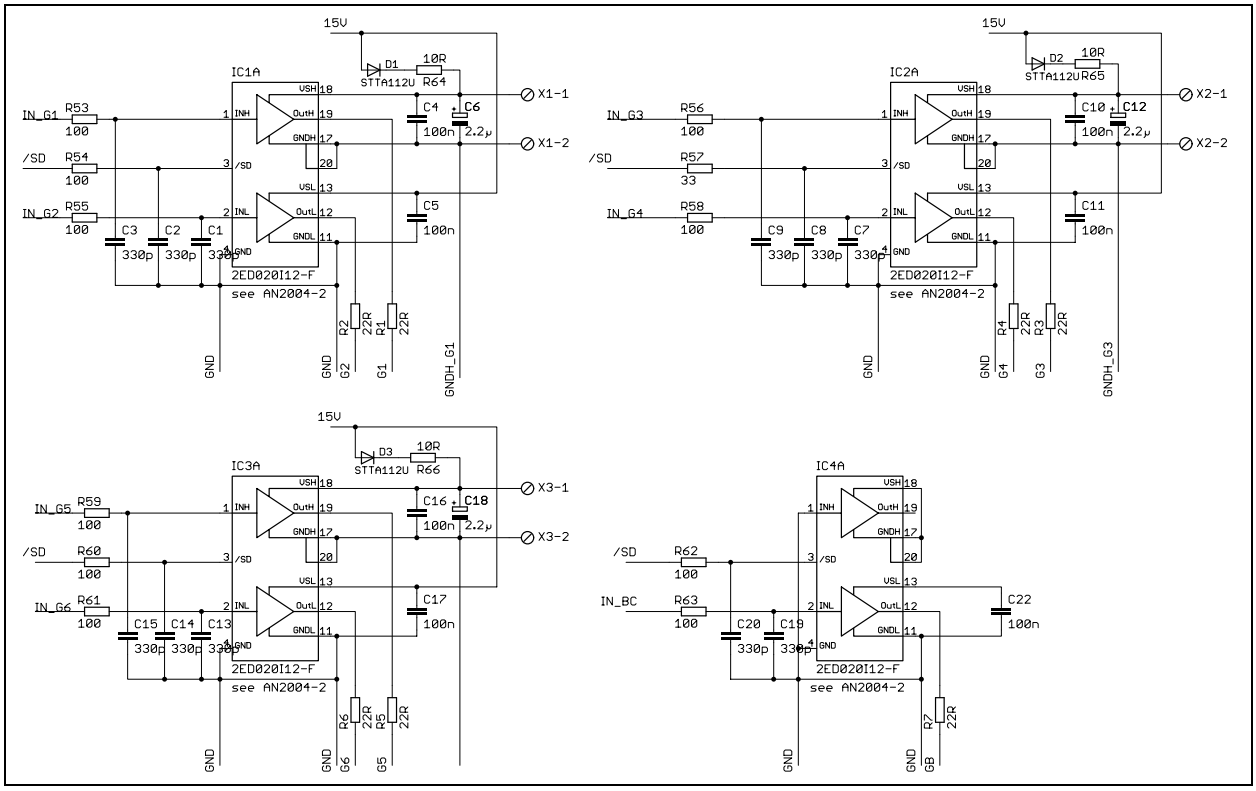

Figure 9 Driver stage

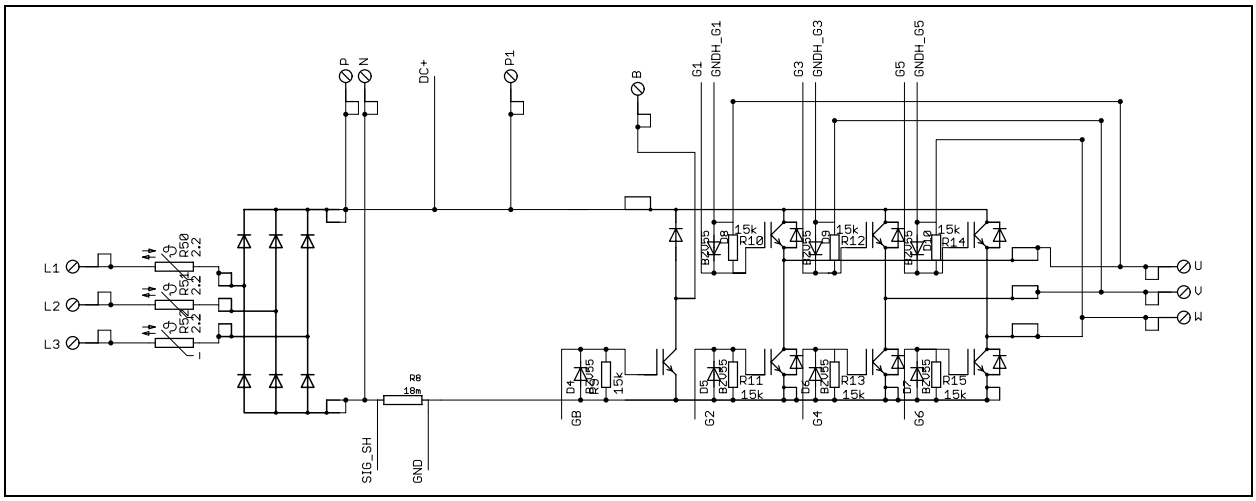

Figure 10 Power stage

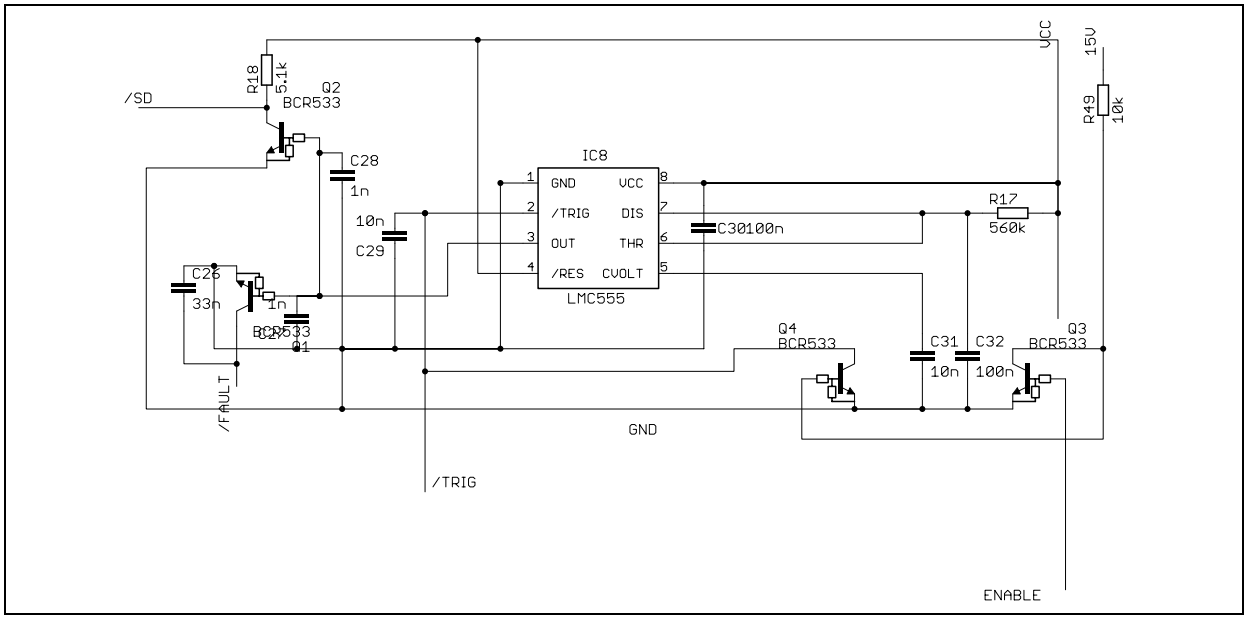

Figure 11 Fault timer

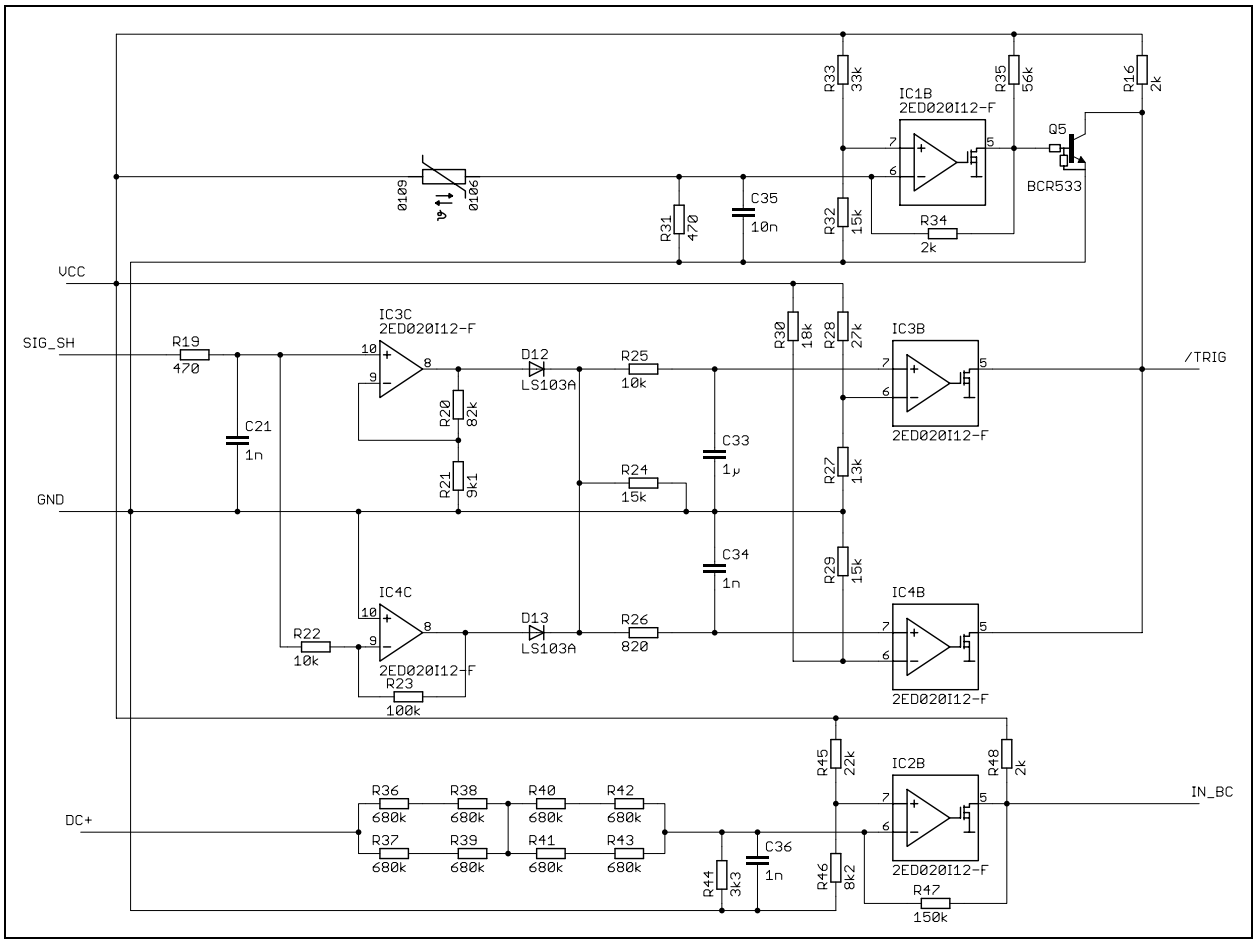

Figure 12 OV OC SC and OT protection circuit

4.2 Layout

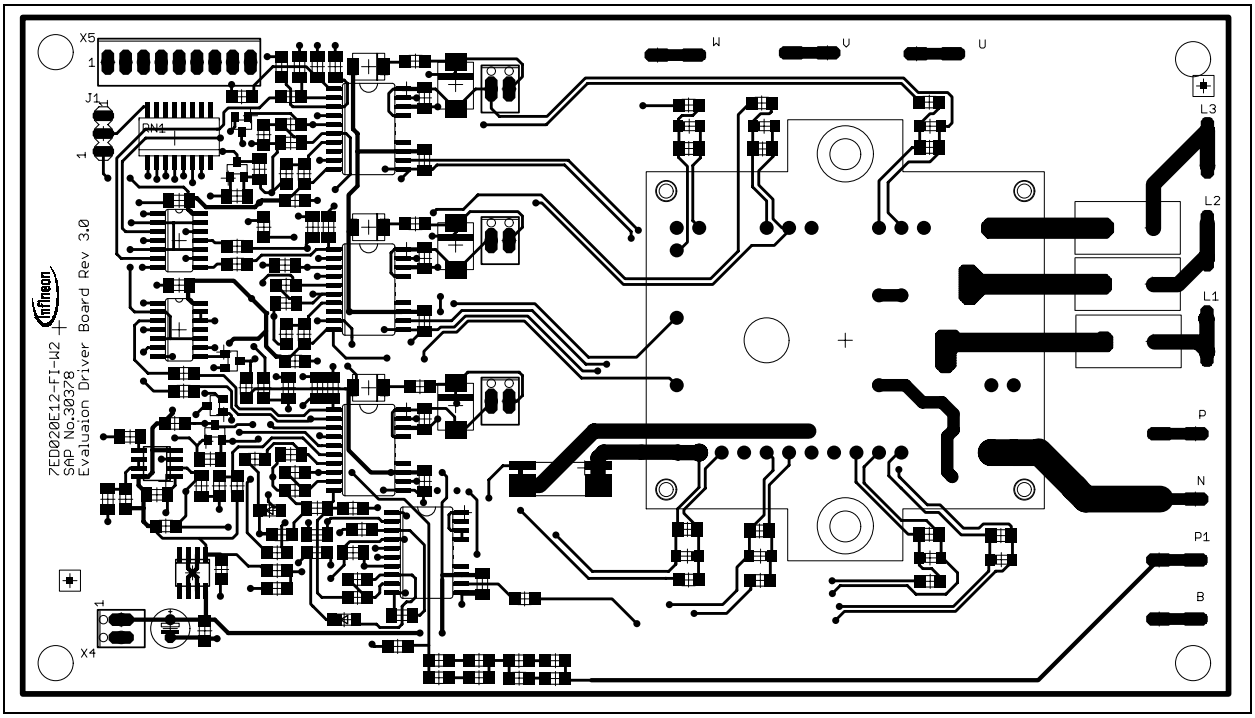

Figure 13 Layout of Top layer

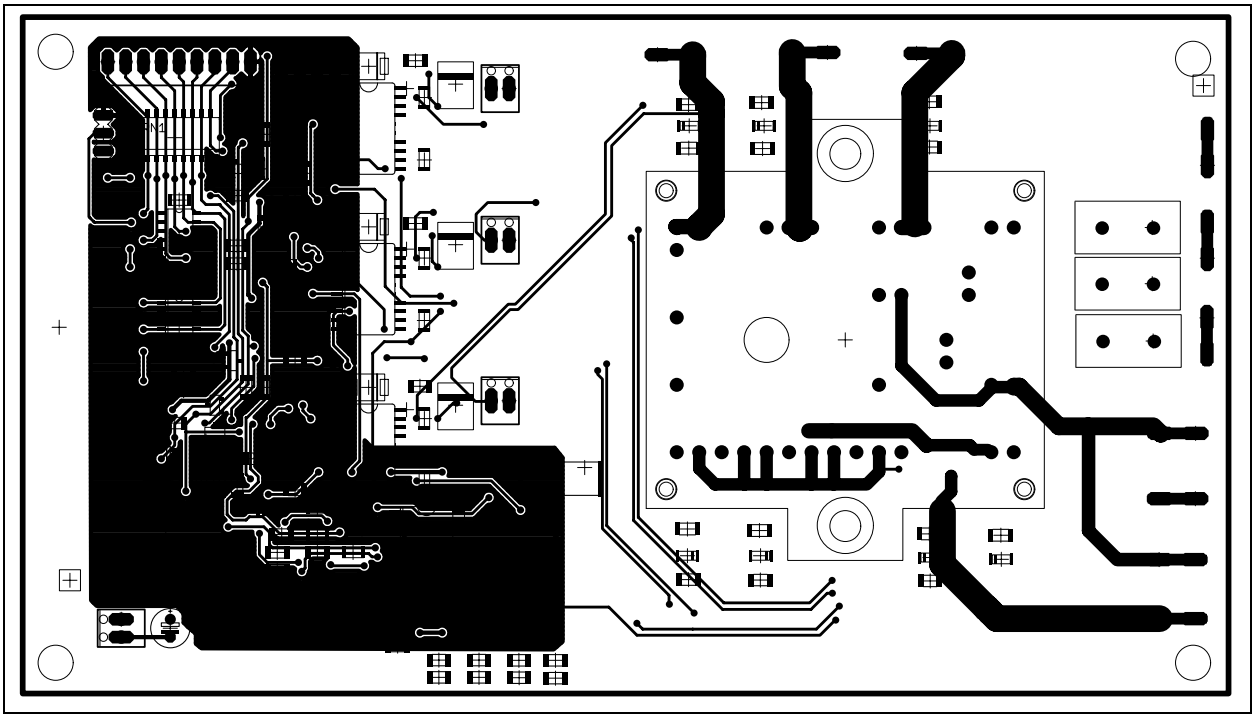

Figure 14 Layout of bottom layer

4.3 Bill of material

Type	amount	value/type	package size	name part
Jumper	1			J1
Capacitor	1	1µ	1206	C33
Capacitor	5	1n	1206	C21, C27, C28, C34, C36
Capacitor	3	2.2µ	Tantalum, size D	C6, C12, C18
Capacitor	1	9POL2.54	9POL2.54	X5
Capacitor	3	10n	1206	C29, C31, C35
Capacitor	1	33n	1206	C26
Capacitor	1	47µ	CPOL-EUE2,5-6E	C23
Capacitor	9	100n	C-EUC1206K	C4, C10, C16, C24, C25, C30, C32, C37, C38
Capacitor	4	4u7	C-EUC1206K	C5, C11, C17, C22
Capacitor	11	330p	C-EUC1206K	C1, C2, C3, C7, C8, C9, C13, C14, C15, C19, C20
Connector	4	2POL2.54	2POL2.54	X1, X2, X3, X4
Connector	10		Tab terminals, type Vogt 3866G.68 (F061.080)	B, L1, L2, L3, N, P, P1, U, V, W
Resistor	3	10R	R1206 from TT Electronics, serie: PWC.	R64, R65, R66
Resistor	3	2R2	NTC_EPCOS	R50, R51, R52
Resistor	3	2k	1206	R16, R34, R48
Resistor	1	3.3k	1206	R44
Resistor	1	5.1k	1206	R18
Resistor	1	8.2k	1206	R46
Resistor	1	9.1k	1206	R21
Resistor	3	10k	1206	R22, R25, R49
Resistor	1	13k	1206	R27
Resistor	1	15k	SOMC1601	RN1
Resistor	7	15k	1206	R9, R10, R11, R12, R13, R14, R15
Resistor	3	15k	1206	R24, R29, R32
Resistor	1	18k	1206	R30
Resistor	1	18m	5020	R8
Resistor	1	22k	1206	R45
Resistor	1	27k	1206	R28
Resistor	1	33R	1206	R57
Resistor	1	33k	1206	R33
Resistor	1	56k	1206	R35
Resistor	1	82k	1206	R20
Resistor	10	100R	1206	R53, R54, R55, R56, R58, R59, R60, R61, R62, R63
Resistor	1	100k	1206	R23

Resistor	1	150k	1206	R47
Resistor	2	470R	1206	R19, R31
Resistor	1	560k	1206	R17
Resistor	8	680k	1206	R36, R37, R38, R39, R40, R41, R42, R43
Resistor	1	820R	1206	R26
Semiconductor	4	2ED020I12-F	PG-DSO-18-2	IC1, IC2, IC3, IC4
Semiconductor	2	74AC86D	14-SOIC	IC5, IC6
Semiconductor	1	78L05	SO-8	IC7
Semiconductor	5	BCR533	SOT23	Q1, Q2, Q3, Q4, Q5
Semiconductor	7	BZV55C16	D-SOD-80	D4, D5, D6, D7, D8, D9, D10
Semiconductor	1	LMC555	SO-8	IC8
Semiconductor	2	LS103A	D-SOD-80	D12, D13
Semiconductor	3	STTA112U	SMB	D1, D2, D3
Box	1			

Gate resistor list

Part type	Recommended gate resistor	Package	Name part
FP25R12W2T4	20R	1206	R1, R2, R3, R4, R5, R6, R7
FP35R12W2T4	12R	1206	R1, R2, R3, R4, R5, R6, R7
FP50R06W2E3	8R2	1206	R1, R2, R3, R4, R5, R6, R7

5 How to order the evaluation board

Every Evaluation Driver Board has its own SAP number and can be ordered via your Infineon Sales Partner. Information can also be found at the Infineons Web Page: www.infineon.com

http://www.infineon.com

Published by Infineon Technologies AG