AN-Number: AN2003-06

Mounting instructions for EasyPIM™750 and EasyPACK750 Modules with screw clamps

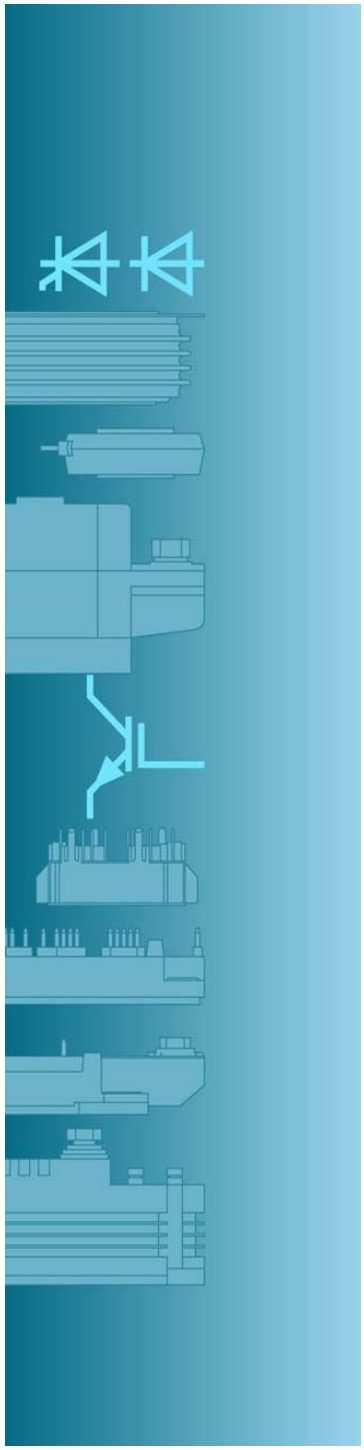

1. General information

The mounting instructions outlined below are recommended for the safe and reliable operation of the above mentioned modules in typical applications. The recommendations given are based on the experiences gained during laboratory and field tests.

The EasyPIM™750 and EasyPACK750 Modules are designed to be attached to a printed circuit board (PCB), 1.6 mm ± 0.2 mm thick.

Each module is fixed to the heat sink using one screw clamp. The recommended distance from the center of the module to the screw fixing hole is 22.5 mm (Picture 1).

The clamp (Picture 2) can be ordered from eupec separately.

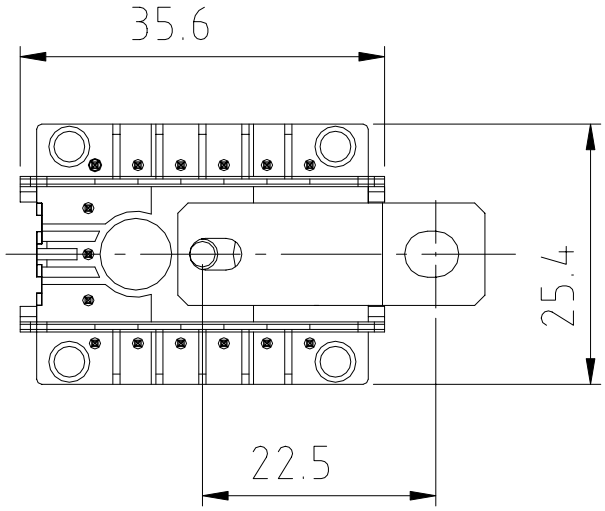

Picture 1: EasyPIM™750 Module with mounted screw clamp

eupec GmbH
Max-Planck-Straße 5
D-59581 Warstein
Author:Ralf Keggenhoff
Tel. +49(0)2902 764-2231
Fax +49(0)2902 764-1150
Email: Ralf.Keggenhoff@eupec.com

www.eupec.com

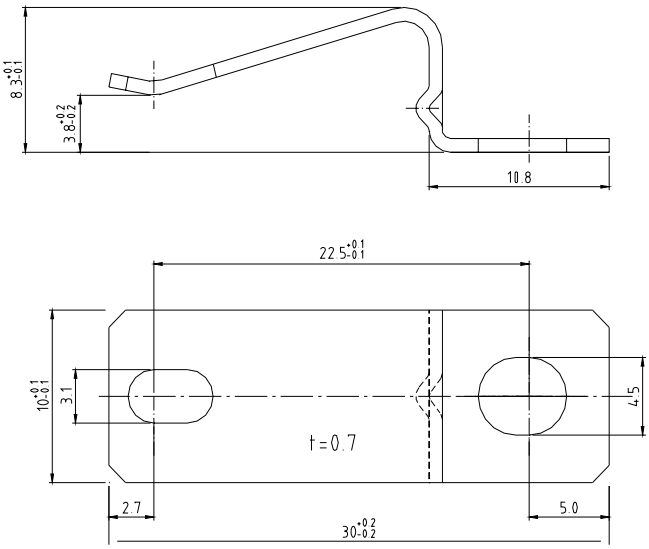

Picture 2: Side view and top view of the screw clamp

2. Fixing of the screw clamp to the module

First the screw clamp has to be fixed to the module. It has to be thread over the hook (Picture 3 b) in the centre of the module and pressed into the first lock position (Picture 3 c). This first lock position makes sure that during all further processing, the clamp will safely fixed to the module.

For this mounting step, a minimum force F1 of approx. 10 N should be applied.

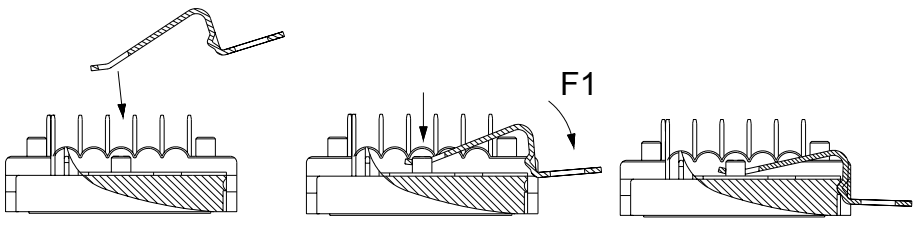

Picture 3: Fixing of the screw clamp to the module

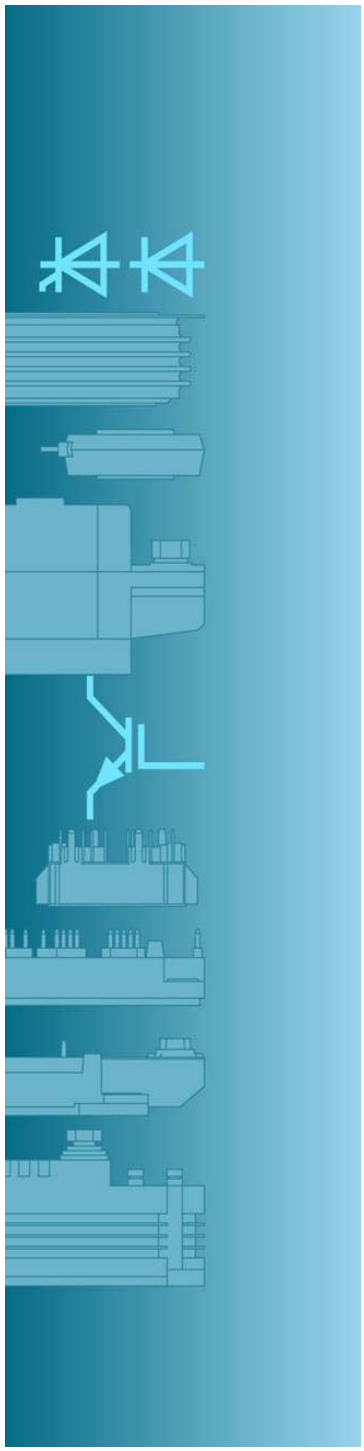

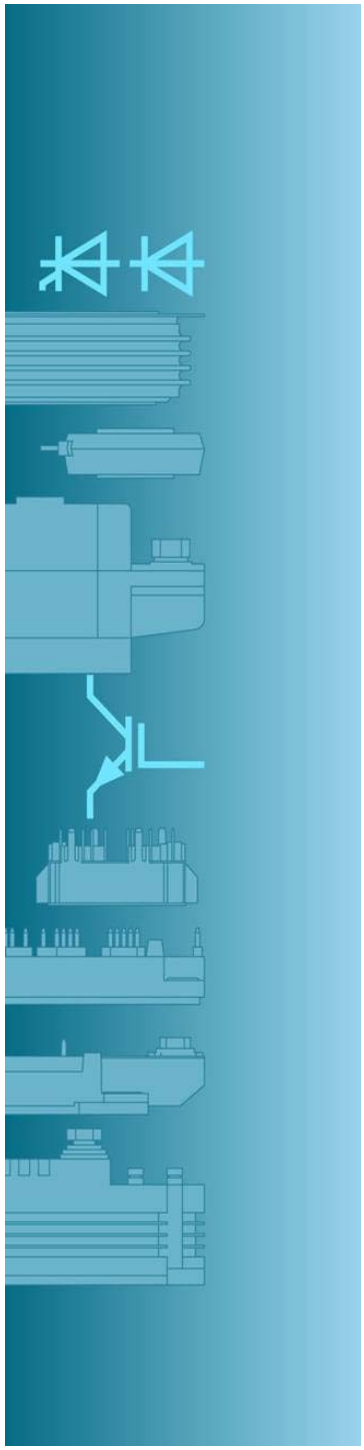

3. Soldering the module into the Printed Circuit Board (PCB)

The previously prepared module (with fixed screw clamp) can now be soldered into the PCB.

The mounting of the module on the heat sink can be done either before or after soldering the module into the PCB.

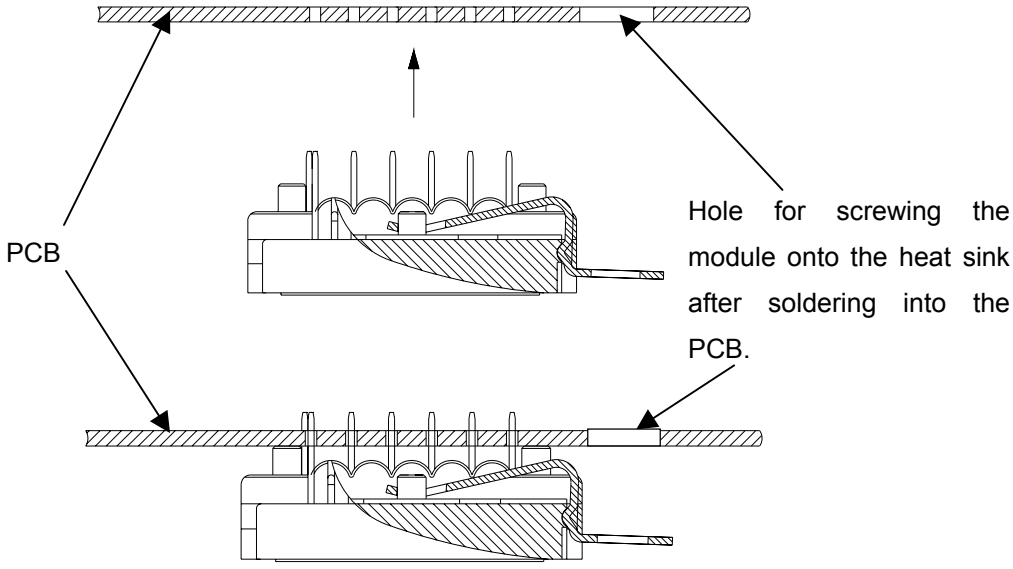

Picture 4: Insertion of the module into the PCB

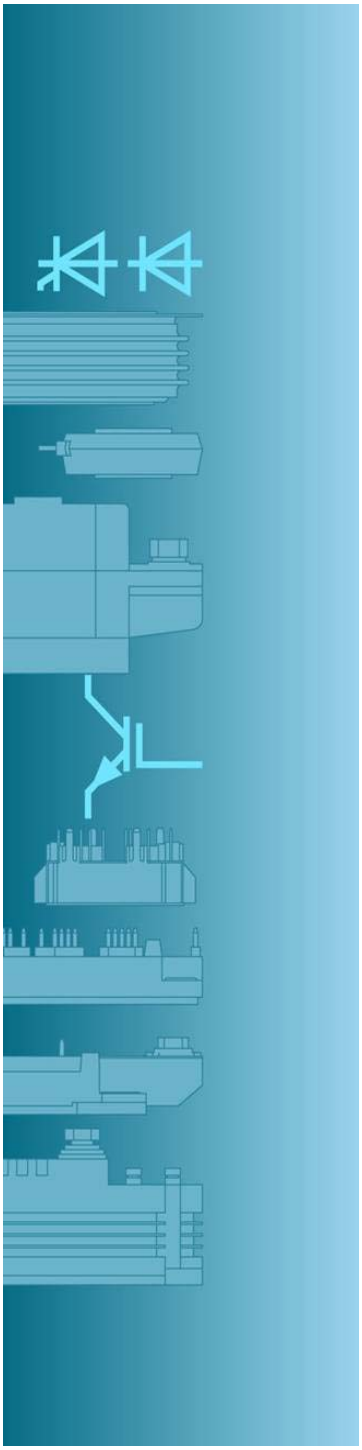

4. Applying the thermal paste

First, the contact areas of module and heat sink must be free of any particles, contamination and damage to prevent not allowed mechanical stress to the module base plate as well as an increased thermal resistance.

Before the module is mounted onto the heat sink an even layer of paste, 100 µm thick, should be applied to the module base plate. This paste can be applied using either a spatula, a roller or by a screen process. The quantity of thermal paste is sufficient if, after assembly to the heat sink, a small amount of paste is visible around the module.

Heat sink requirements based on an applied thermal paste thickness of 100 µm:

- Roughness: ≤ 10 µm
- Flatness based on a length of 100 mm: ≤ 50 µm

Note: 1. The flatness of the heat sink should not exceed the values listed above. This area includes the entire module mounting area as well as that of the clamp.

2. If the layer of thermal paste is applied too thick, the thermal resistance R_{th} between module and heat sink will increase.

5. Assembly of the module on the heat sink

The modules are mounted onto the heat sink using screw clamps and M4 screws. It is also possible to add a washer. For this purpose, the heat sink has to be provided with a threaded hole as shown in picture 5.

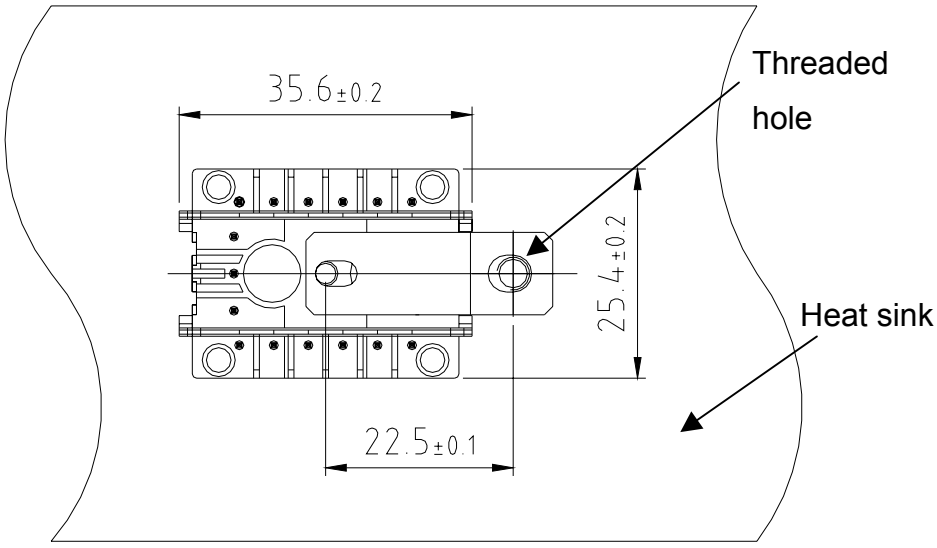

Picture 5: Distance of the threaded hole to the module centre

Note: If the module is first soldered into the PCB or if a later disassembly of the module is desired, the PCB must contain a suitable hole (hole size depends on the screwdriver size or the screw's head diameter / the washer).

The module should be positioned onto the heat sink in such a way that the hole of the screw clamp is exactly above the threaded hole of the heat sink. The mounting surface must be clean and free of contamination.

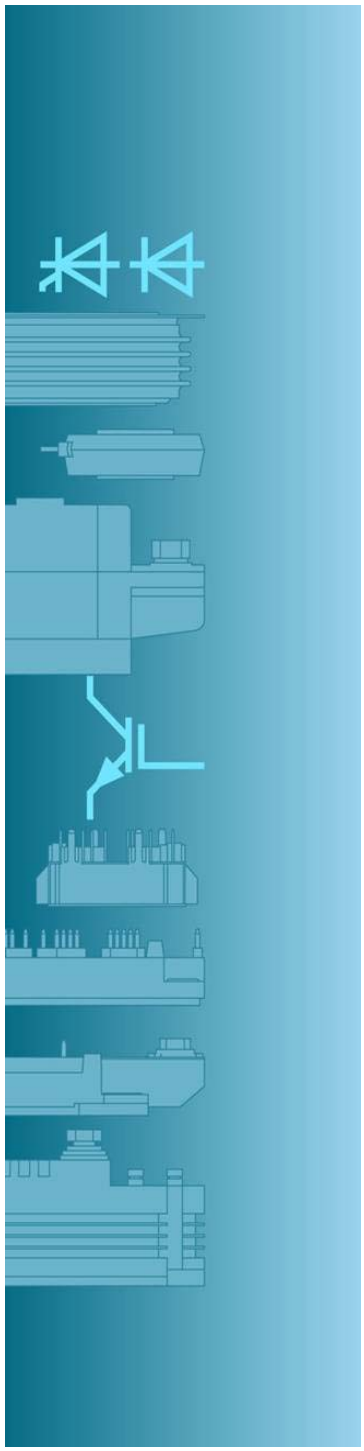

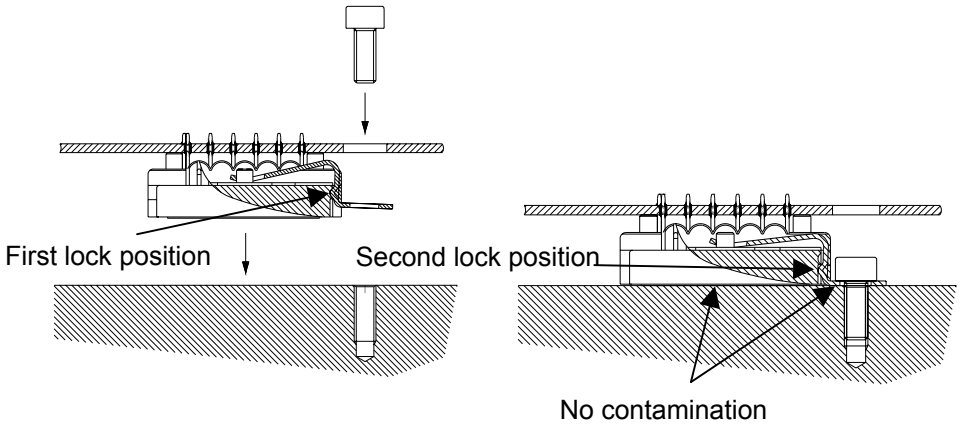

Picture 6: Mounting of the module onto the heat sink

After the module is properly positioned, the screw is inserted through the screw flange of the clamp and tightened. In order to prevent the module from lifting or tilting, it is necessary to press it down by a force of approx. 10 N while fixing the screw. This pressure is necessary to bring the screw clamp from its first lock position into the second lock position.

Mounting screw	M4
Recommended mounting torque	M_a = 2.0 – 2.3 Nm*
Recommended thread reach for screws of property class 4.8 to 6.8 for different materials	
Aluminium cast alloy Aluminium alloy hardened Aluminium alloy not hardened	2.2 x d = 8.8 mm* 1.2 x d = 4.8 mm* 1.6 x d = 6.4 mm*
Washer acc. to DIN 125 **	D = 9 mm

* as per technical literature ** if used

Table 1: Technical data of the mounting screw

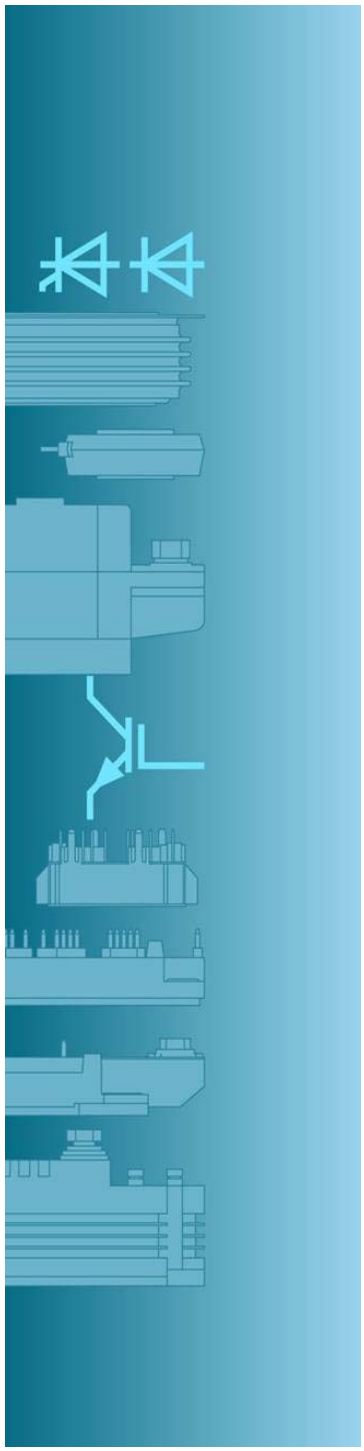

6. System consideration

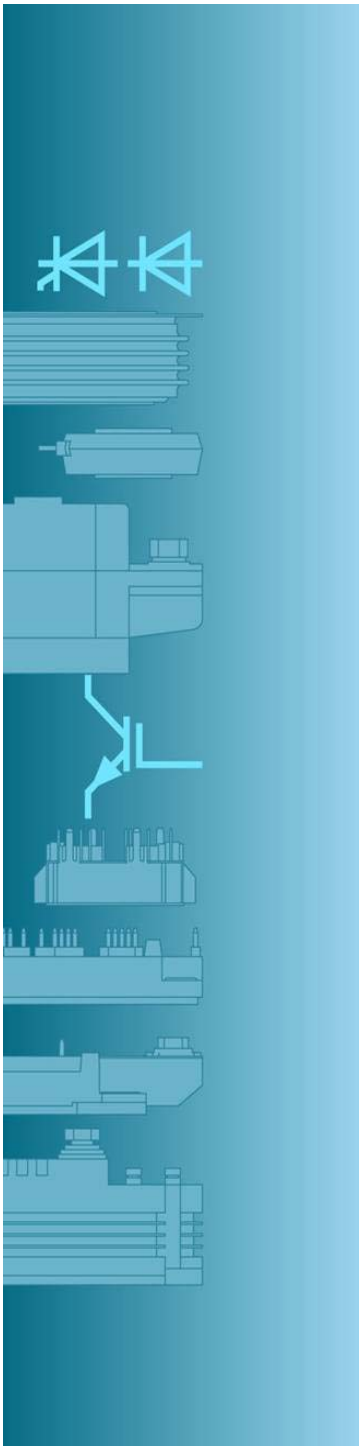

If the module is correctly mounted on the heat sink and into the printed circuit board, the screw clamp will apply the necessary pressure of the module to the heat sink. This pressure together with the correct amount of thermal paste will ensure an optimal thermal resistance between the module and the heat sink.

Since the PCB is connected to the module by soldered connection pins only, suitable measures have to be taken that make sure that vibrations be kept to a minimum. Any possible movement between the soldered terminals and the module case has to be avoided. Therefore, the circuit board should additionally be fixed to the heat sink close to the module. Two options are possible:

a) The module is soldered into the PCB before mounting it onto the heat sink:

To minimise the forces F that are applied to the connection pins of a module, it is recommended to keep a distance of at least 5 cm from the module's outer edges (Picture 7). In this case, the height tolerance of the spacer should not be greater than the height tolerance of the module (± 0.3 mm).

b) The module will be soldered into the PCB after mounting it onto the heat sink:

In this case no mechanical stress will occure. Therefore it is allowed to place the distance holder close to the module.

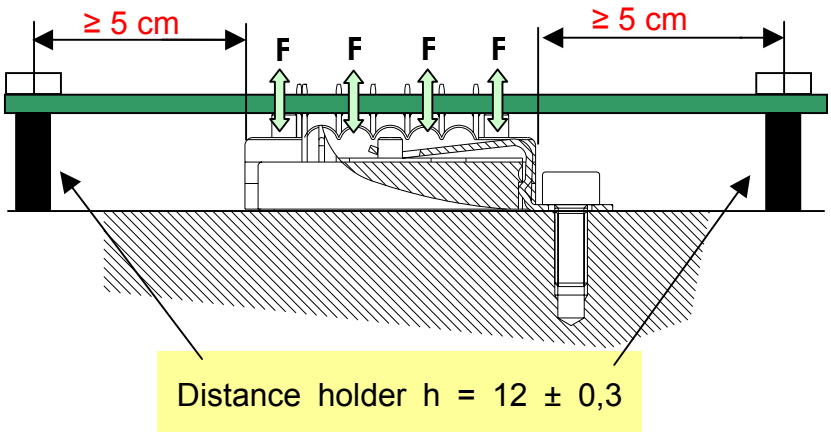

Picture 7: Fixing of the PCB

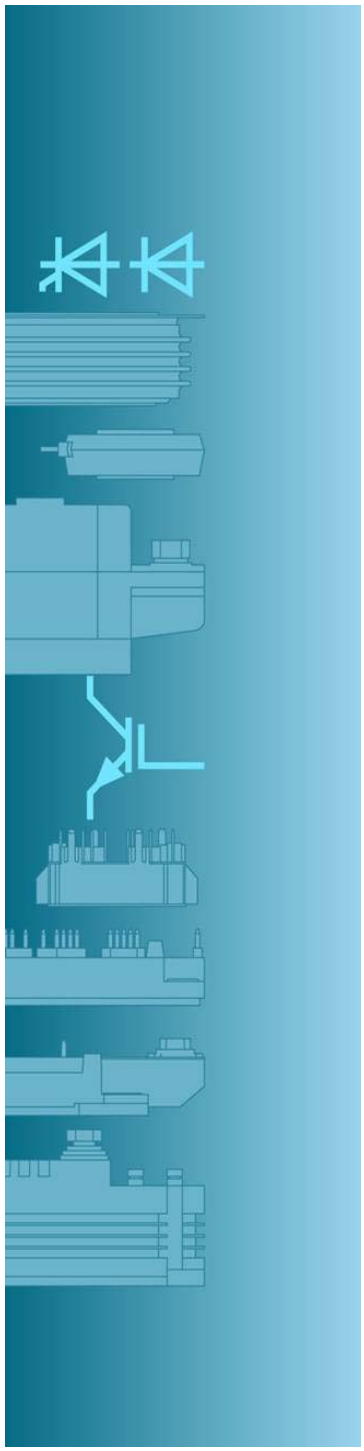

7. Clearance and creepage distances

When defining the layout of the PCB, application specific standards, mainly regarding clearance and creepage distances, have to be considered. This is particularly important for the area of the screw clamp which is located under the printed circuit board. In order to meet the respective requirements regarding clearance and creepage distances, current carrying devices or though-holes in this area should to be avoided or additional isolation measures (e.g. lacquering) must be taken.

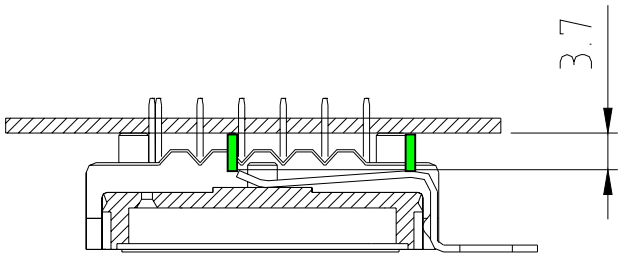

Picture 8: Clearance distance between screw clamp and PCB

The minimum clearance distance between the screw clamp and the PCB is 3.7 mm.

Clearance distance > 3.2 mm

Creepage distance > 5 mm

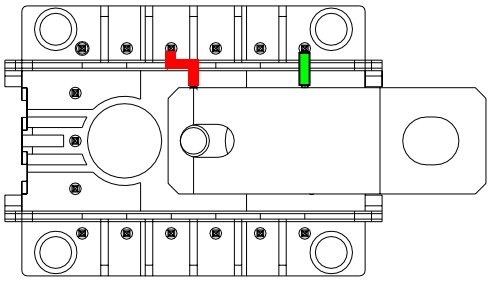

Picture 9: Clearance and creepage distances between screw clamp and module pins

The clearance and creepage distances specified in the datasheet are minimum values irrespective of other devices that would be mounted close to the module.

In any case, the application specific clearance and creepage distances have to be checked and compared to relevant standards and guaranteed by suitable constructive means, if required.

