Quick start guide: EMC and output filter considerations for MA2304xNS

MERUS™ class D audio amplifiers

About this document

Scope and purpose

This document evaluates the EMC/EMI behavior and output filter design recommendations for the MERUS™ MA2304xNS amplifier family. The main objective of this document is to serve as a quick start guide for product designers.

Intended audience

This application note is intended for audio amplifier design engineers.

Table of contents

1 Filter design quick start guide for MA2304xNS 2
1.1 Quick recommendation table – filter type vs. product application type 2
1.2 Quick filter selection and design procedure 4
Revision history 6

1 Filter design quick start guide for MA2304xNS

1.1 Quick recommendation table – filter type vs. product application type

Table 1 shows the recommended output filter configurations according to the application type and speaker cable length. The aim of this table is to serve as a quick reference for engineers and product designers who do not have time to read the entire application note. However, it is strongly recommended to read the full application note. It should be considered that each product design is different from all others, and final results might change according to a broad range of root causes, such as measurement methodology, PCB and layout design, component manufacturers and tolerances, etc. Component names should reference Table 1.

Paying special attention to power supply design is recommended, as conducted emissions test results are significantly affected by design, topology and internal filtering. The columns that indicate a suitable output power for each different filter type are an approximate indication, with the objective of avoiding non-desired results in conducted emissions with generic or “off the shelf” DC power supplies. Emissions are typically affected by the continuous or average output power. The peak power values consider music or pink noise playback with 8 dB crest factor. Passing conducted emissions in mains-powered applications at higher power levels is possible, but it requires careful power supply selection and/or design. For some examples of recommended power supplies see section 5.3 in the complete application note “EMC and output filter considerations for MA2304xNS”.

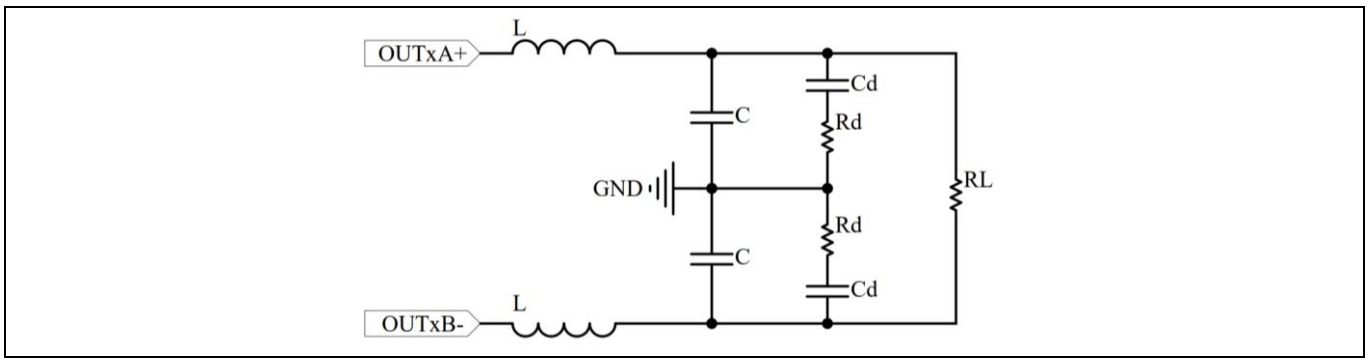

Figure 1 Bridge tied load (BTL) output filter configuration.

Table 1 **Recommended output filter configurations for MA2304xNS depending on cable length and application. Emissions are typically affected by the continuous output power. The peak power values consider music or pink noise playback with 8 dB crest factor.**

Config. no.	Cable length (x cm)	Filter type	L	C	Rd+Cd	~Total output power at 2 Ω		~Total output power at 4 Ω		~Total output power at 8 Ω		Comment (see table below)
						Cont.	Peak	Cont.	Peak	Cont.	Peak	
1	x ≤ 15 cm	Ferrite	NFZ2MSD150SN10L	220 pF	–	≤ 5 W	≤ 16 W	≤ 10 W	≤ 32 W	≤ 20 W	≤ 40 W	–
2	x ≤ 15 cm	Ferrite	NFZ2MSD301SZ10L	150 pF	–							
3	15 cm < x ≤ 20 cm	Ferrite	NFZ2MSD150SN10L	470 pF	–							
4	20 cm < x ≤ 40 cm	Ferrite	NFZ2MSD150SN10L	1 nF	–							
5	40 cm < x ≤ 60 cm	LC	3.3 µH	470 pF	1 nF + 220 R							1
6	x > 60 cm	LC	4.7 µH	1 nF	10 nF + 100 R							2
7	x > 60 cm	LC	6.8 µH	10 nF	100 nF + 22 R	> 5 W	> 16 W	> 10 W	> 32 W	> 20 W	≤ 40 W	
8	x > 60 cm	LC	6.8 µH/10 µH	100 nF/220 nF	1 µF + 10 R							3

Table 2 Key considerations for recommended output filter configurations in Figure 1

	Comments
1	Lower-cost LC option.
2	Optimal LC option for idle power consumption and noise. See section 4.3 of the complete application note.
3	Optimal LC options for idle power consumption and noise. See section 4.3 of the complete application note. The 6.8 µH/10 µH + 100 nF/220 nF configuration is recommended when the emissions from the power supply and its internal filters are unknown and suppression is also needed above 150 kHz. 6.8 µH + 100 nF may require use of PMP6.

1.2 Quick filter selection and design procedure

1. Select a filter from Table 1 according to the loudspeaker cable length and continuous output power.
2. If the power supply's emissions and filtering are unknown, a safe choice is typically configuration 8 from the same table, which provides the lowest cut-off frequency and highest suppression above 150 kHz at the expense of a higher cost and PCB area and lower efficiency.
3. If it is desired to optimize or modify the selected filter or design a different one, proceed to a simple SPICE simulation.
4. Simulate the filter with an inductive load equivalent to the loudspeaker load. If the value is unknown, 22 µH is a good minimum value.
5. Select L and C values according to the amount of suppression desired in the frequency region of interest. Consider and use G_{max} (Figure 2 and Table 3) and the capacitance limits (Table 4) as design parameters. L and C must not be chosen arbitrarily. It is also strongly recommended to use an Rd+Cd damping network (Figure 1), where Cd should be between 2 and 10 times the value of C.

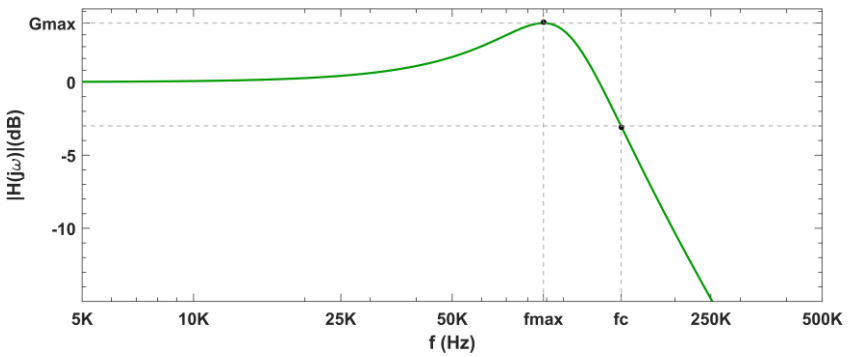

Figure 2 Example of the magnitude response of the second-order filter with G_{max} and f_{max} parameters. G_{max} is the magnitude of maximum peaking.

Table 3 Recommended G_{max} of the output filter with a 4 Ω + 22 µH to 16 Ω + 22 µH load (differential mode)

f_{max}	G_{max}
> 10 MHz	Not critical
3 MHz < f < 10 MHz	< 10 dB
1 MHz < f < 3 MHz	< 6 dB
f < 1 MHz	< 4 dB

Table 4 Capacitance limits vs. inductance

Filter L	Capacitance limit	PMP
Ferrite	1 nF	LPC or HAP
3.3 µH	470 pF	LPC or HAP
4.7 µH	1 nF	LPC or HAP
6.8 µH	10 nF	LPC or HAP
6.8 µH	100 nF	HAP (may require PMP6 depending on loudspeaker load)
10 µH	220 nF	HAP only

In cases where higher capacitance values are required (for instance if even more suppression is required) the inductance value should be increased above 10 µH. If it is desired to maintain the same inductance value and increase the capacitor value then the switching frequency when playing above 1 W/ch of output power (at a 4 Ω nominal load) should be increased by changing the power mode profile to number 6, although this will have an impact on efficiency. This can be done by writing to the register address the value in Table 5.

Table 5 Register address to change power mode profile to PMP6

Register address	Bits	Value
0x0000	2:0	0x110

Revision history

Document version	Date of release	Description of changes
V 1.0	2023-08-07	Initial release
V 1.1	2023-09-15	Update output power limits at 8 Ω load

Trademarks
All referenced product or service names and trademarks are the property of their respective owners.

Edition 2023-09-15
Published by
Infineon Technologies AG
81726 Munich, Germany

© 2023 Infineon Technologies AG. All Rights Reserved.

Do you have a question about this document?

Email: erratum@infineon.com

Document reference
AN_2307_PL88_2307_145556

IMPORTANT NOTICE

The information contained in this application note is given as a hint for the implementation of the product only and shall in no event be regarded as a description or warranty of a certain functionality, condition or quality of the product. Before implementation of the product, the recipient of this application note must verify any function and other technical information given herein in the real application. Infineon Technologies hereby disclaims any and all warranties and liabilities of any kind (including without limitation warranties of non-infringement of intellectual property rights of any third party) with respect to any and all information given in this application note.

The data contained in this document is exclusively intended for technically trained staff. It is the responsibility of customer's technical departments to evaluate the suitability of the product for the intended application and the completeness of the product information given in this document with respect to such application.

For further information on the product, technology, delivery terms and conditions and prices please contact your nearest Infineon Technologies office (**www.infineon.com**).

WARNINGS

Due to technical requirements products may contain dangerous substances. For information on the types in question please contact your nearest Infineon Technologies office.

Except as otherwise explicitly approved by Infineon Technologies in a written document signed by authorized representatives of Infineon Technologies, Infineon Technologies' products may not be used in any applications where a failure of the product or any consequences of the use thereof can reasonably be expected to result in personal injury.