Assembly Instructions for EasyPACK™ S Modules

About this document

Scope and purpose

This application note provides guidelines on how to use and implement the EasyPACK™ S modules. The values and recommendations provided in this document should not be considered as datasheet values.

Intended audience

The intended audiences for this document are design engineers, technicians, and developers of electronic systems.

Key points

- Requirements for printed circuit boards
- Manual and fully automated handling of EasyPACK™ S
- Press-in process: Procedure, tools, and parameters
- Assembling the EasyPACK™ S on a heat sink
- Clearance and creepage distances

About this product family

Product family

EasyPACK™ S – smart, small, sizeable. This latest innovation in power electronics offers the highest degree of automation in customer production lines. With a compact 36 x 33 x 6 mm design, EasyPACK™ S modules enable system miniaturization. With features such as robust thermal management, high reliability, and low EMI, the EasyPACK™ S is a highly efficient solution for demanding applications and next-gen power electronics.

Target applications

- On-board charging
- Data center and AI data center solutions
- Commercial HVAC systems
- Residential heat pumps
- Commercial heat pumps
- Uninterruptible power supply (UPS)
- Power transmission and distribution

Table of contents

Table of contents

About this document **1**
About this product family **1**
Table of contents **2**
1 Introducing the EasyPACK™ S **3**
2 Requirements for printed circuit boards (PCB) **5**
2.1 PCB requirements for PressFIT technology 5
2.2 PCB requirements for soldering the PressFIT modules 7
3 Packaging and assembly process of the EasyPACK™ S modules **9**
3.1 Packaging 9
3.2 Manual handling of the EasyPACK™ S modules 10
3.3 Fully automated handling of the EasyPACK™ S modules 11
3.4 Automated threading into the PCB 13
3.5 Applying the thermal grease 13
3.6 Adhesive force of the DCB in housing 14
4 Press-in process **15**
4.1 Introduction 15
4.2 General press-in procedure 15
4.2.1 Fully automatic press-in process for one module on the PCB 15
4.2.2 Typical semi-automatic press-in process for the EasyPACK™ S: One by one 17
4.2.3 Typical semi-automatic press-in process for the EasyPACK™ S: Simultaneously 18
4.3 Press-in tools 19
4.4 Press-in process parameters 20
4.4.1 Press-in behavior 20
4.4.2 Press-in force and speed 21
5 Press-out process **23**
6 Quality of the PressFIT contacts **24**
7 Heat sink requirements for module assembly **26**
8 Assembling the EasyPACK™ S on a heat sink **27**
9 System considerations for mechanical robustness **29**
9.1 Assembling single module on the PCB 29
9.2 Assembling multiple modules on the PCB 29
10 Clearance and creepage distances **31**
10.1 Package-implemented creepage and clearance distances 31
References **33**
Revision history **34**
Disclaimer **35**

1 Introducing the EasyPACK™ S

The EasyPACK™ S has been a cornerstone of power electronics, providing reliable and efficient solutions for a wide range of applications. Building on the success of the EasyB and EasyC series, we are excited to introduce the latest addition to the family – the EasyPACK™ S. Its smart, small, and sizeable design makes this package an ideal choice for demanding applications and high-volume production.

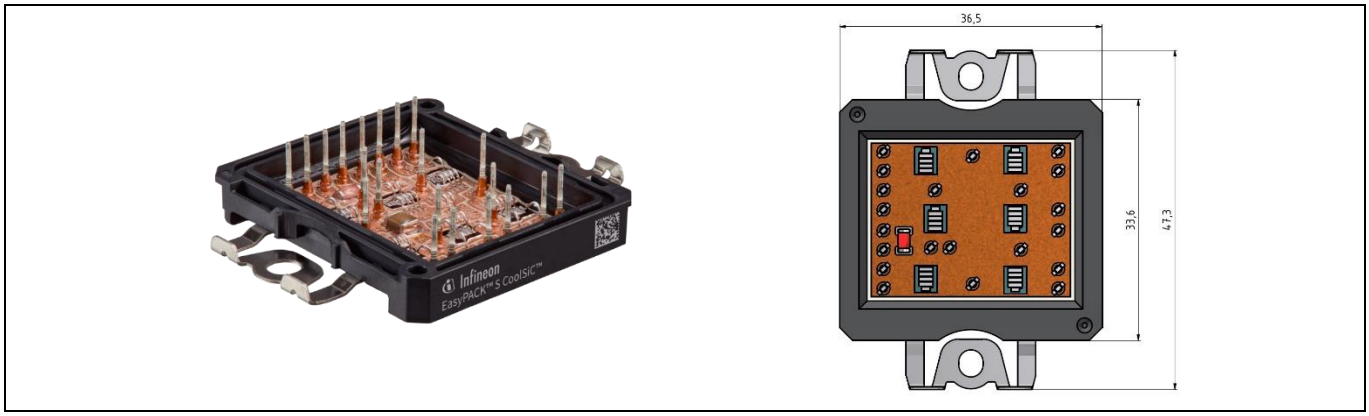

Figure 1 **Typical appearance of the EasyPACK™ S**

Key innovations and benefits of the EasyPACK™ S are:

- **Future-ready design**: The EasyPACK™ S is prepared for integration with new chip technologies and can meet demanding lifetime requirements
- **High-volume production**: The EasyPACK™ S is designed to support high-volume production with a high degree of automated handling to improve efficiency
- **Competitive Pricing**: More customer-focused and value-oriented pricing compared to other market solutions, including for top-side cooled devices and molded packages, while maintaining all the advantages of a power module solution

The EasyPACK™ S is a compact, baseplate-less package design with pin connections to the printed circuit board (PCB). It is the perfect fit for industrial and automotive applications, including on-board chargers, HV-LV DC-DC converters, AI servers, heat pumps, drives, and more.

The EasyPACK™ S also provides benefits that make it an ideal choice for high-volume applications:

- Its low-tolerance design enables efficient, automated mounting to streamline the production process.
- The isolated ceramic allows for seamless connection to a heat sink, and the PressFIT technology provides a highly reliable PCB connection

The PressFIT contact is a kind of cold welding, which complies with the requirements for high durability, high-temperature tolerance, RoHS conformity, and simple handling. The high-current PressFIT pins used in the EasyPACK™ S are equipped with an eye-of-the-needle (EoN) PressFIT zone. The material of the pins provides higher electrical and thermal conductivity compared to standard PressFIT pins. Due to this, the high-current PressFIT pins offer higher current capability and better heat dissipation.

Introducing the EasyPACK™ S

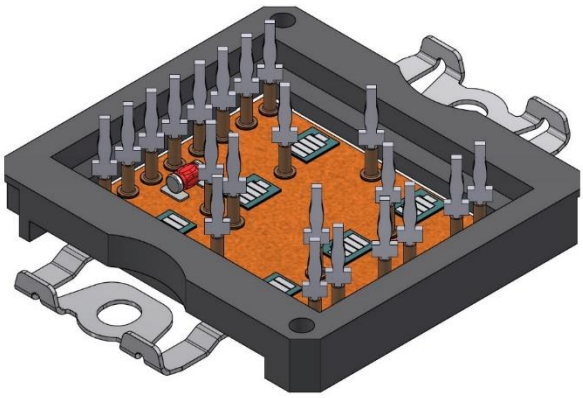

Figure 2 **Typical appearance EasyPACK™ S with PressFIT contacts**

The EasyPACK™ S is designed to operate at extreme temperatures of up to 175°C. During the operation, the module-frame temperature must not exceed 175 °C.

Thanks to its small footprint, the PCB costs can be reduced significantly. Its compact height of 5.6 mm, made possible by removing the lid, simplifies mechanical integration. The design and qualification processes of EasyPACK™ S ensure that removal of the lid does not compromise the module's performance or reliability.

The module's design features small distances between the pins, which effectively prevents accidental contact with the bond wires during handling. The rigorous qualification process, which includes testing to meet the HV-H3TRB standard, guarantees that the module can withstand the stress of handling and mounting without damaging the wires. The results of qualification testing demonstrate that modules without a lid can achieve the same level of reliability as those with a lid. Condensation on the gel surface, which can occur on modules with or without a lid, does not affect the reliability of the module. Our qualification processes ensure that the module can operate reliably even in outdoor environments where condensation may occur.

In terms of performance, the EasyPACK™ S:

- Achieves superior thermal performance through low thermal resistance via integrated isolated substrates
- Offers flexible and customizable solutions to support various topologies and chip technologies, including CoolSiC™, CoolGaN™, and TRENCHSTOP™ IGBT7
- Has fast-switching capability enabled by ultra-low stray inductance and the possibility of integrating snubber capacitors
- Meets the highest isolation standards, featuring a V_{isol} of 4 kV for 60 seconds

More information on the EasyPACK™ S can be found at Infineon.com [2].

2 Requirements for printed circuit boards (PCB)

2.1 PCB requirements for PressFIT technology

The PressFIT technology used in the Easy modules has been inspected and qualified according to the IEC 60352-5 and IEC 60747-15 standards by Infineon Technologies for standard FR4 PCBs with “chemical tin” and hot-air-leveling (HAL) surfaces. Infineon recommends using chemical tin metallization. The qualification tests were done on standard FR4 material, which is complaint with the requirements of IEC 61249-2-7.

If other handling technologies are to be used in the production of the PCBs, they have to be checked, tested, and qualified.

Table 1 **Requirements for a PCB**

	Minimum	Typical	Maximum
Diameter of the drilled hole	1.12 mm	1.15 mm	
Thickness of copper in the hole	> 25 µm		< 50 µm
Metallization in the hole			< 15 µm
Final diameter of the hole	0.99 mm		1.09 mm
Thickness of copper in conductive layers	35 µm	70 µm 105 µm	400 µm
Metallization of the circuit board	Tin (chemical) recommended		
Metallization of the pins	Tin (galvanic)		
Typical thickness of the PCB	1.6 mm		

To ensure that the PressFIT contact sits securely in the PCB, adhere to the hole specifications given in Table 1. Not doing so would result in non-standard results that could be rejected for quality reasons. For example, if the specification of the PressFIT holes is limited only to the finished dimension (i.e., the metallized hole), different drill sizes could be used depending on the PCB manufacturer and production philosophy. Different metallization thicknesses could also be provided. The final diameter of the hole is a function of the drill hole, the thickness of the copper layer and the metallization in the hole. If the final diameter is too small, the press-in force required would be too high. The FR4 material can also have an influence on the press-in force.

It is recommended that the holes in the PCB be drilled (not milled) during manufacturing with a 1.15 mm drill. The 1.12 mm to 1.15 mm diameter for the drilled hole is arrived at considering the runout tolerances of the spindles after drilling because the FR4 material can shrink.

With a 30 to 50 µm thick copper in the hole, and a tin layer of about 1 µm for tin applied chemically, the final diameter of the hole is obtained as the base dimension. Due to the thinness of the tin layer, this diameter is always higher than 1 mm, as stated in the IEC 60352-5 standard. The final diameter of the hole is typically between 1.02 to 1.09 mm considering the drilling diameter, the thickness of the copper and the chemical tin layer.

Requirements for printed circuit boards (PCB)

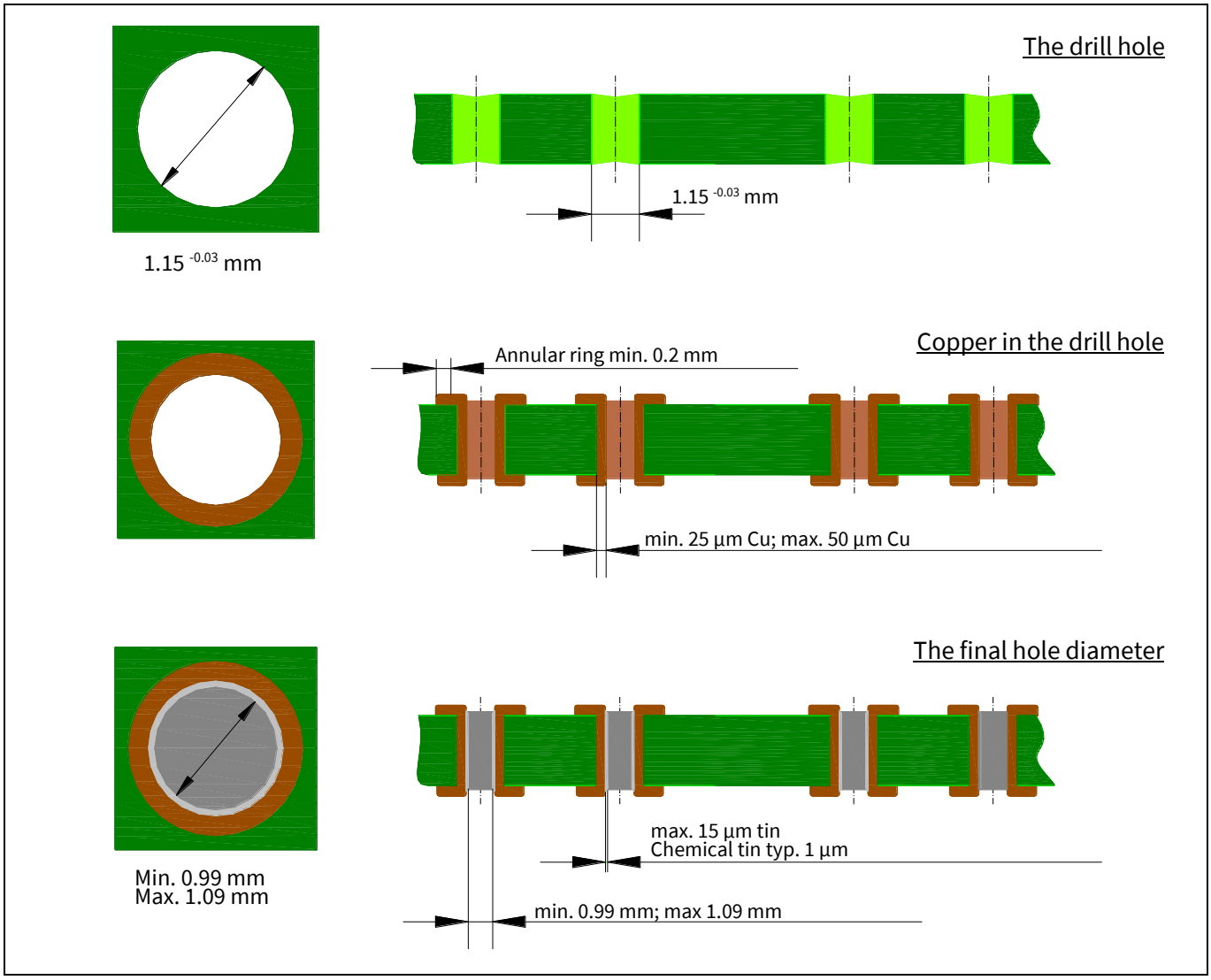

Figure 3 **Structure of a PCB**

The PressFIT technology has been qualified for the FR4 PCB material.

After the reflow soldering process is carried out on a PCB, the module can be pressed into the board without difficulty. The retention forces of the press-fitted pins are not diminished.

Depending on the applied press tools, a certain distance must be maintained from the middle of the pins to other components. The lowest allowed distance is 3 mm, but a distance of 4 mm is recommended.

A PressFIT module can be replaced up to two times. This means that a PCB can be used for a total of three times. Correct handling of the components is essential.

Once a module has been pressed in and the contact pressed out, it can no longer be pressed back in. The module can then only be attached to a new PCB via soldering. The plastic deformation of the PressFIT area does not permit a further PressFIT process.

To facilitate the current capability of a high-current PressFIT pin (HCP) at the system level, ensure that directly at the pin connection the PCB cross-section is significantly larger than the cross-section of the pin, or the combined cross-section of parallel pins. This can be achieved by applying the following guiding principles:

Requirements for printed circuit boards (PCB)

- Use a thick copper layer. Copper thickness of up to 105 µm/3 oz is commonly available. It allows layouts that can accommodate typical power electronic components as drivers
- Parallel multiple layers.
    - All layers can be paralleled for connections without low inductance, e.g., AC output lines
    - For DC-link connections and other lines that contribute to commutation inductance, one signal should be routed to the top layers and the return to the bottom layers. Both groups should be separated by a thick core to provide isolation and minimize capacitance
- Use an additional copper area. Even if not contributing much to current carrying, it will support heat dissipation. Nevertheless, avoid capacitive coupling with sensitive circuits.
- Avoid structures that lead to current crowding, e.g., structures with 90° angles

2.2 PCB requirements for soldering the PressFIT modules

The EasyPACK™ S modules with PressFIT pins can be soldered onto PCBs that have a thickness that can secure pin protrusion (refer to the IPC-A-610 standard).

The final minimum diameter of the through-holes depends on several factors such as the PCB type, thickness, plating, production tolerances, solder process, or the solder alloy used. Therefore, to ensure good soldering results and a reliable long-term connection, it must be determined by the customers. Please refer to the IEC 61188-6-3 or the IPC 2222 standards.

A simplified example of determination guided by IEC 61188-6-3:

- Diameter of square component terminal L = 1.28mm
- PCB has 1.5 mm final thickness
- Selective soldering: used gap ratio (GRs) is 35 % according to the standard

Hence the finish hole size (FHS) = L + GRs Value = 1.28mm + (1.5mm x 35%) = 1.805mm ≈ 1.81mm

Similarly, the FHS for a rectangular component terminal such as the PressFIT pin can be determined.

Figure 4 shows the cross-section of the EasyPACK™ S modules' PressFIT pin, customers can determine the finish hole size (FHS) with the L values by following the standard.

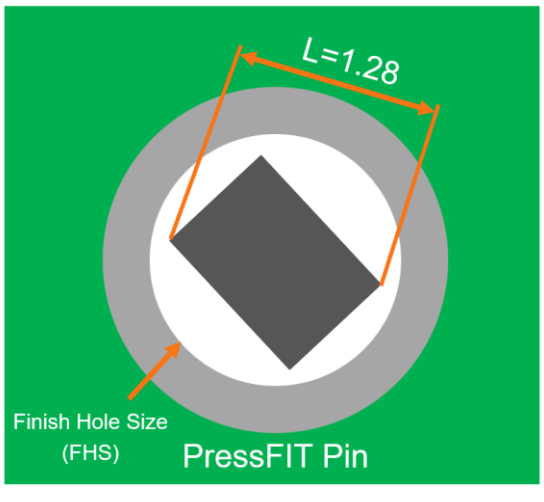

Figure 4 **Hole diameter for soldering high-current PressFIT pins**

Requirements for printed circuit boards (PCB)

The final hole size must be defined carefully. If the diameter is too large, ensuring a solid electrical and mechanical connection between the pin and the board can be challenging. Creepage and clearance are critical factors to be considered when determining the final hole size.

When assembling several modules on a single PCB, the height tolerance of the modules must also be considered during the mounting procedures. This will prevent mechanical deformation of the PCB or use of unwanted force on the modules.

The PCB layout also helps in achieving better thermal performance in the system. For example, a thicker or a larger layer of copper minimizes losses and contributes to the heat transfer through the pins.

Note: During the entire soldering process, ensure that the process parameters, the solder temperature, or the time duration for which the modules are in touch with the contacts do not lead to deformation or damage of the plastic housing. A maximum soldering temperature of T = 260°C ± 3°C is permissible for a maximum duration of t_{max} < 10 s ± 1 s according to the IEC 60068-2-20 standards. Customers can test different process parameters at their own risk. These can also be evaluated in cooperation with Infineon. It is expected that the components are free from defects and are treated properly. For more information about the soldering processes, please refer to AN2005-06.

3 Packaging and assembly process of the EasyPACK™ S modules

3.1 Packaging

The EasyPACK™ S modules are securely packaged in trays. These trays are specifically designed to protect the modules from any kind of mechanical damage, ensuring their safety until they arrive at the destination.

Figure 5 shows the packaging for the EasyPACK™ S modules, which consists of a stack of trays and one lid on the top. This is called one-way packaging. One tray contains 20 EasyPACK™ S modules, placed upside down (see Figure 5). In the tray, the modules are supported by the contact between the housing and the tray cavity. The pins do not touch the tray surface. The packaging is ESD protected according to IEC 61340-5-1:2024 with an electrostatic resistance of 10^2 - 10^{10} ohm.

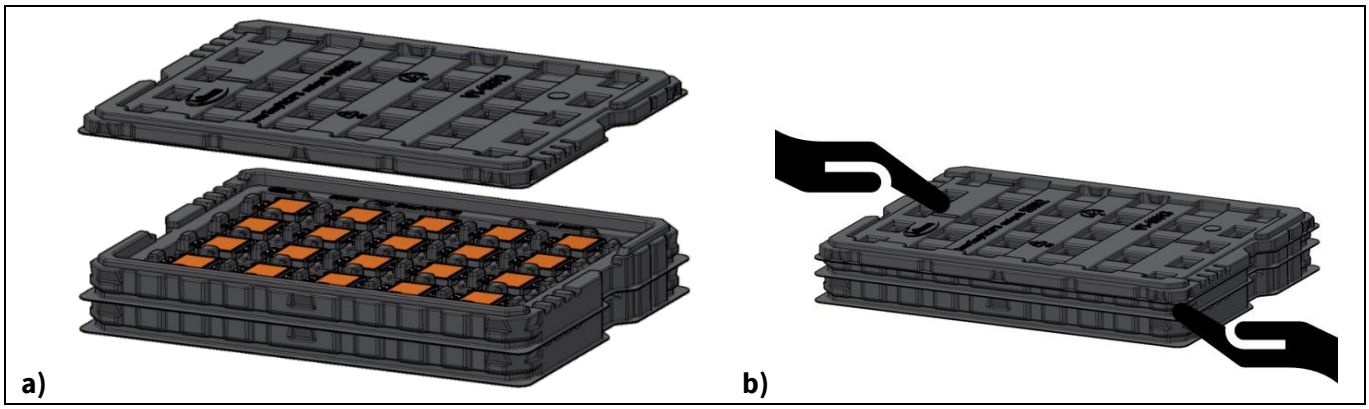

Figure 5 **(a) Tray stack with lid for EasyPACK™ S**
(b) Suggested method to remove the lid and the trays

The stack of trays and the lid are joined together with a snap-fit connection positioned at the four corners of the packing. Use both hands to remove the lid or separate the trays. Gently lift the corner of the packing with one hand to release the snap fit, while using the other hand to hold the stack down. After releasing the snap fits, the packing can be removed. Table 2 lists the main dimensions and features of the packaging tray.

Table 2 **Packaging tray measurements**

	Dimensions			Material	Weight [grams]
	Length [mm]	Width [mm]	Height [mm]		
Tray	356^{+1}_{-2}	276^{+1}_{-2}	$29.5^{+0,3}_{-0,3}$	PET-ESD	160
Lid	356^{+1}_{-2}	276^{+1}_{-2}	$15.3^{+0,3}_{-0,3}$	PET-ESD	130
Set (tray + lid)	356^{+1}_{-2}	276^{+1}_{-2}	$29.6^{+0,7}_{-0,7}$		

Packaging and assembly process of the EasyPACK™ S modules

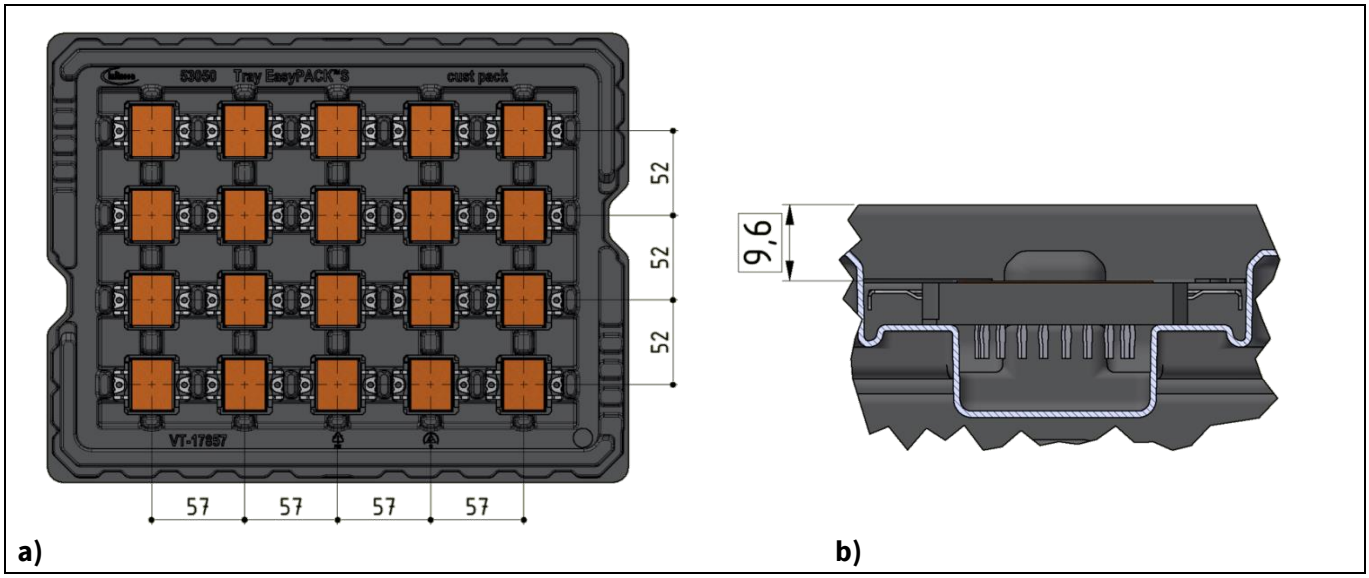

Figure 6 **(a) x/y position of the EasyPACK™ S modules in the tray**
(b) Z position of the EasyPACK™ S modules in the tray

Figure 6 illustrates the alignment of the EasyPACK™ S modules in the tray.

(a) Displays the orientation and positions of the 20 EasyPACK™ S modules inside the tray

(b) Indicates the z position of the EasyPACK™ S modules in the tray

Note: The orientation of the EasyPACK™ S modules is not discernable due to their upside-down position in the tray. It can be identified using the module data matrix code (DMC) after the modules are taken out of the tray. The orientation of the DMC must be checked for each new stack, while the orientation of the individual pin-out to the position of the DMC code is given in the product datasheet.

3.2 Manual handling of the EasyPACK™ S modules

To minimize the risk of damage and to ensure efficient processing, there should be minimum manual handling of the modules. Manual handling is permissible when supported by auxiliary devices or material slides. While manually handling the modules:

- The environment should be ESD controlled
- The technicians/engineers should wear gloves to prevent damage or contamination
- The housing should be gripped from the sides and pins should not be touched to prevent damage or contamination
- A reproducible procedure for threading the pins into a PCB should be in place to ensure that all pins are threaded evenly and smoothly

For pre-aligning the module to the corresponding PCB hole pattern, two approaches can be used:

- The first approach involves using alignment pins within the holes of spring clamps as shown in Figure 7 (a)
- The second approach involves using spring-loaded pins centering the two holes in the housing as shown in Figure 7 (b)

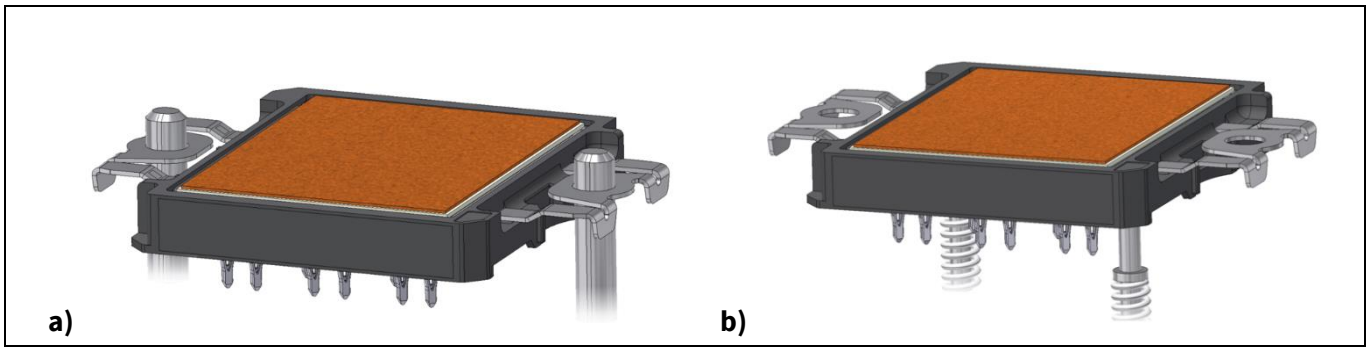

Figure 7 **(a) Pre-aligning with spring clamp holes**
(b) Pre-aligning with holes in the housing

To use either of the approaches for module centering, the PCB must contain corresponding cutouts for the pins considering the system tolerances required. For further information on the PCB design and requirements, please refer to chapter 2.

Note: The centering hole of the EasyPACK™ S should not be used for fixing the PCB with screws. The PCB must be fixed using distance keepers. For more information, refer to chapter 9.

3.3 Fully automated handling of the EasyPACK™ S modules

The EasyPACK™ S modules are designed to facilitate highly automated processes. For information on module positioning and orientation within the packing tray and the z-height, please refer to section 3.1.

For handling the modules in an automation process, a dedicated gripping tool (gripper) is needed. It must be designed to ensure secure and fast transportation in the manufacturing cell without damaging the module.

The package provides dedicated gripping areas in the housing. These must be used by the gripping tool to take the modules out of the tray safely. Figure 8 illustrates the options for automated gripping and highlights the permitted area for the gripping tool:

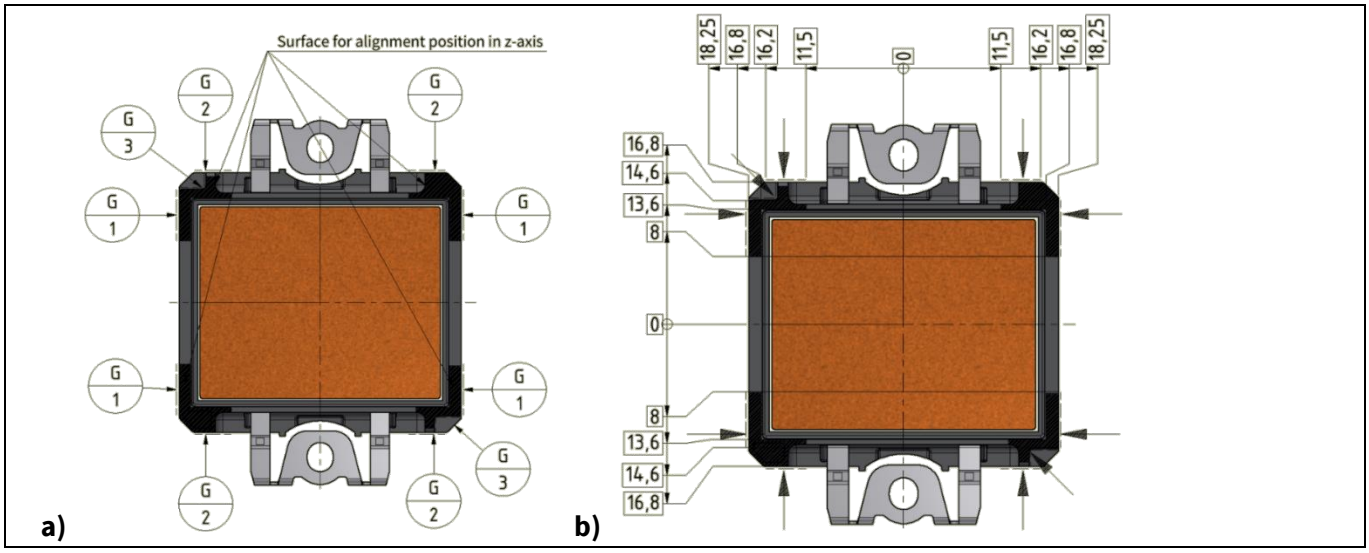

Figure 8 **(a) Allowed gripping areas**
(b) Dimensions of the gripping areas

Packaging and assembly process of the EasyPACK™ S modules

The maximum allowed gripping force in the different areas is given in Table 3. The maximum value of the lateral gripping force must not be exceeded.

Table 3 **Maximum lateral gripping force**

Position	Maximum force
G1	50 N
G2	50 N
G3	30 N

The EasyPACK™ S modules are embedded in the packaging tray with a certain tolerance in the x, y, and z directions. Therefore, the tool must either provide a compensating mechanical design, or an automated optical inspection (AOI) must be used. The trays have a cavity design that allows access to the gripping surfaces with a gripping tool.

If the tactile location of the z-position is necessary, only the top surface of the housing in the corresponding gripping areas must be used (see Figure 8). The fingers of the gripper must not collide with the ceramic substrate when closing as shown in Figure 9 (a). The grip must be co-planar and parallel. Both sides of the gripper must close simultaneously to ensure a centered handling. An example of EasyPACK™ S module in a gripper is shown in Figure 9 (b).

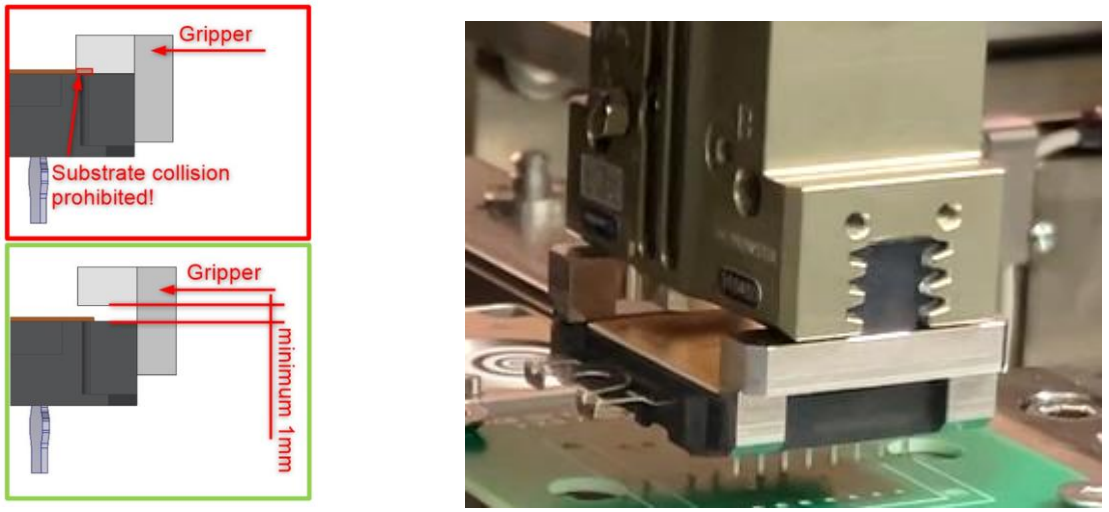

Figure 9 **(a) There should be at least 1 mm distance between the gripper and the DCB**
(b) Example of an EasyPACK™ S module in a gripper using gripping area G1

To scan the DMC code of the module after picking it out of the tray, the gripping area G2 must be used. The pin tips of the EasyPACK™ S modules are aligned to the housing surface with a high accuracy. For the threading process, the reference system of the module is as per the center position of the gripping fingers.

It must be ensured that the gripper centers with respect to the hole pattern to achieve an accurate press-fit positioning. Step-by-step instructions for the fully automatic press-in process of one module on the PCB are given in chapter 4.2.1.

If an intermediate drop-off is required during the automation process, the module alignment options shown in Figure 7 can be used.

3.4 Automated threading into the PCB

The module is designed in a way that its pin tips can be threaded into the PCB automatically. The pins are assembled in a highly accurate manner with the mechanical reference to the gripping surfaces as described in section 3.3.

Nevertheless, the design of the process equipment itself also has an influence on the threading capability. Therefore, the use of an automated optical inspection (AOI) is strongly recommended to detect the position of the PCB hole pattern and the module in the gripping system (see section 4.2.1).

The following requirements are fulfilled:

- Accuracy of the hole pattern on the PCB must be within a position tolerance of Ø0.1 mm common zone (CZ), including alignment holes/reference holes for alignment in the assembly jig
- The system speed for threading the pin tips into the PCB must not exceed 25 mm/min
- The module must be oriented correctly
- The modules must be threaded into the PCB with a certain resistance to maintain its position on the PCB until the press-in process is complete. The recommended length of pre-insertion is between 0.8 mm and 1.5 mm

3.5 Applying the thermal grease

Due to the differences in individual surfaces (e.g., roughness and flatness) of the heat sink and the module, their contact may not be even throughout the contact area. As a result, air gaps between them are unavoidable.

To eliminate the air gaps and achieve an optimum flow of heat into the heat sink, a thermal compound must be applied on their contact surface.

A well-applied layer of a thermal compound will fill all cavities and allow a metallic contact between the module's base and heat sink's surface. To ensure continuously favorable heat transfer, a compound with permanently elastic features should be chosen.

Before mounting the module onto the heat sink, apply an even layer of thermal grease on the module's base or on the heat sink. The grease can be applied with a thermal paste stencil. The quantity of thermal grease is considered sufficient if a small amount of grease is visible around the module after it is assembled on the heat sink.

For Al_2O_3 substrate modules, the typical thickness of the thermal grease is 50 µm. For other substrate materials, the average thickness can vary.

The recommended method to apply thermal grease is through the screen print process. Apart from an optimized and module-specific distribution, a homogenous and reproducible layer thickness can be achieved with this procedure. The size of the module and the viscosity of the thermal grease are important factors in this case. [1]

Figure 10 shows the interface surface of an EasyPACK™ S module for applying thermal grease and an example of the stencil used.

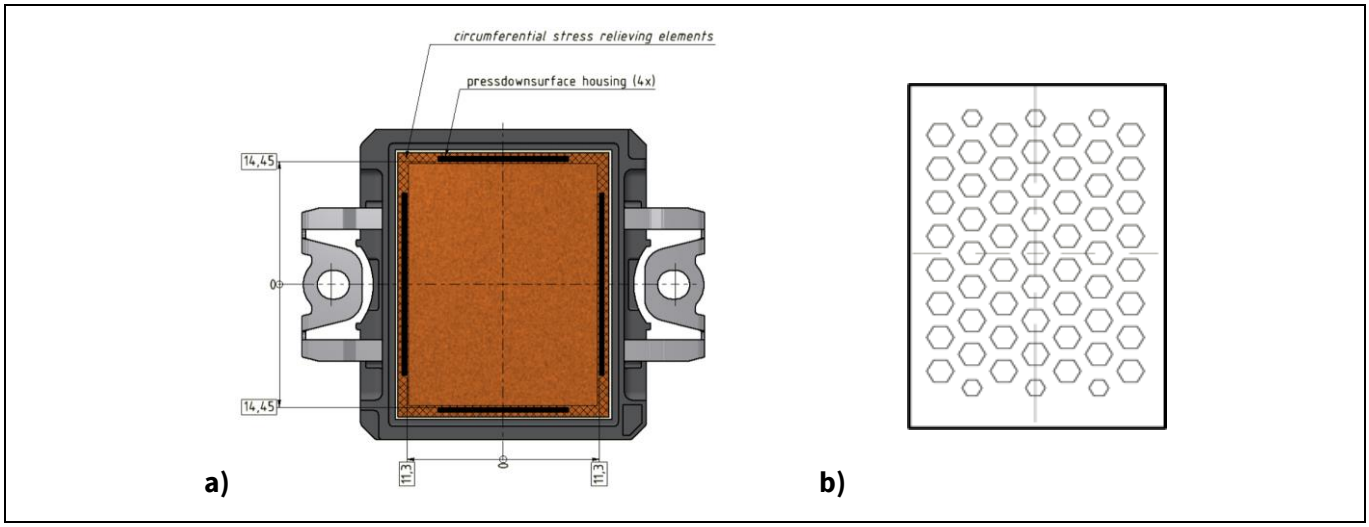

Figure 10 **(a) Interface surface of an EasyPACK™ S module**
(b) Example of a stencil to apply thermal grease

The layout of the stencil should be adjusted depending on the viscosity of the thermal grease. In addition, the thickness of the stencil's metal sheet must be more than 100 µm.

For thermal paste materials with a higher viscosity, a stencil layout with thermal paste should be applied directly below the press-down areas of the module (see Figure 10 (a)). Depending on the assembly's process flow, a honeycomb layout for the stencil can be considered to allow the press-in of the module afterwards. A corresponding design of the press-in tool is necessary as described in section 4.2.2.

3.6 Adhesive force of the DCB in housing

The module is not designed to withstand force on the housing. Applying force on the module housing (Fp) during handling or assembly can push the direct cooper bonding (DCB) out of the housing, as shown in Figure 11.

Note: Therefore, forces (Fp) applied on the module housing must be avoided during handling and assembly. Please note that this case is different from the normal press-in process, where the DCB is fully supported in the press tool, and the press-in forces affect the DCB, but not the housing.

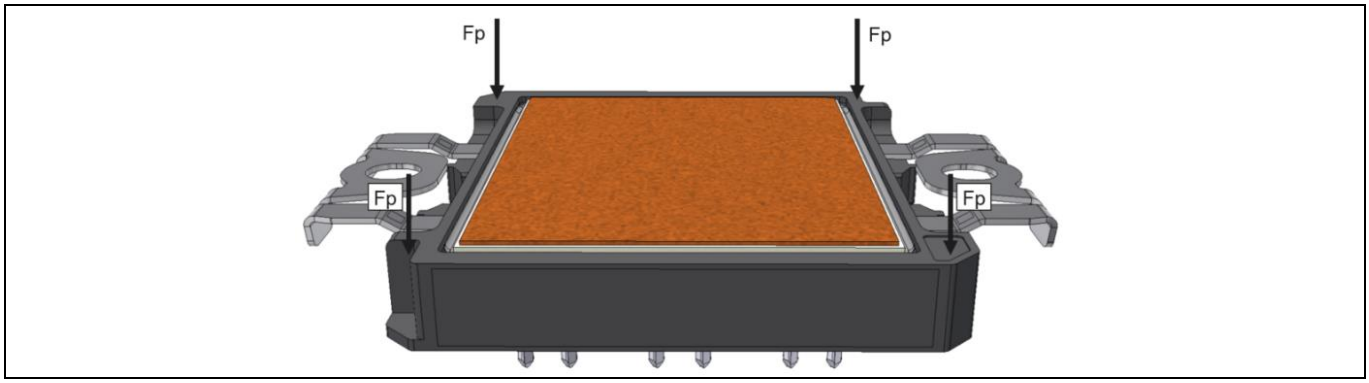

Figure 11 **To avoid pushing out the DCB, avoid applying any force on the housing while handling the module**

4 Press-in process

This chapter discussed the press-in process including the necessary tools and parameters for inserting the EasyPACK™ S into the printed circuit board.

4.1 Introduction

The EasyPACK™ S modules are inserted into a printed circuit board by using the press-in technology. The press fitting can be performed using a toggle lever press or a machine. A press-in tool that can record the applied force and the insertion distance is strongly recommended to monitor the press-in process. This way, consistent quality and reproducibility are assured.

The press-in force is related to the retention force and the quality of the press-fit connection (electrical resistance and reliability). The press-fit speed for standard tests is between 25 to 50 mm/min according to IEC 60352-5. A press-fit speed of under 25 mm/min can increase the press-in forces and deform the pins, or create a connection that is not gas tight. Infineon recommends a press-in speed of about 100 mm/min. The typical press-in speed for automated assembly lines is up to 450 mm/min.

Note: During the press-in process, the PCB and the pressing area of the pressure plate must be parallel to each other. The pressure plate should be mechanically fixed in position without any tolerance. The module is then pressed into the PCB in a regular motion.

The module pins should penetrate the PCB during the press-in till the upper tool with the integrated distance keepers touches the board. These defined distance keepers ensure a consistent and compensated height between the different modules, facilitating a reliable connection, while also controlling the maximum force applied during the press-in process.

4.2 General press-in procedure

The press-in procedure can be performed using various methods, such as manual, semi, or fully automatic. The manual press-in process relies on human operations using press toggles to insert the modules into the PCBs. This approach requires a high attention to detail and generally has lower reproducibility due to errors. The semi-automatic press-in process represents a significant improvement in terms of efficiency and accuracy. A human operator is still required to place the components onto the PCB manually, but the actual press-in operation is performed by a machine. This approach allows for a consistent and controlled amount of force. The fully automatic process represents the most advanced approach for inserting the components. Here robotic systems and machines are used to automate the assembly process completely, from component placement to press-in, without any human intervention.

The modules can be pressed-in one after the other or simultaneously.

4.2.1 Fully automatic press-in process for one module on the PCB

As the demand for high-volume production assemblies continues to grow, fully automated press-in processes have become an increasingly popular choice for manufacturers. It relies on the use of advanced robotics to place the components onto the PCBs accurately and efficiently. The EasyPACK™ S is specifically designed to meet the requirements of an automated press-in assembly.

To support the robotic assembly process, the components should be equipped with special solutions and improvements to ensure the safe and efficient handling of packages through the pick and place operation.

Press-in process

The actual press-in process, however, takes place in a separate step with the help of a press-in machine. If it's preferred to position and press the products directly using the robot gripper, the robot grippers must provide homogenous support of the DCB during the final press-in process into the PCB.

In general, modules can be placed onto the PCB through various methods, including automated optical inspection (AOI) offset correction and other camera-based image-processing system approaches. Figure 12 shows the camera-based image-processing system approach with the steps required to place the package properly onto the PCB.

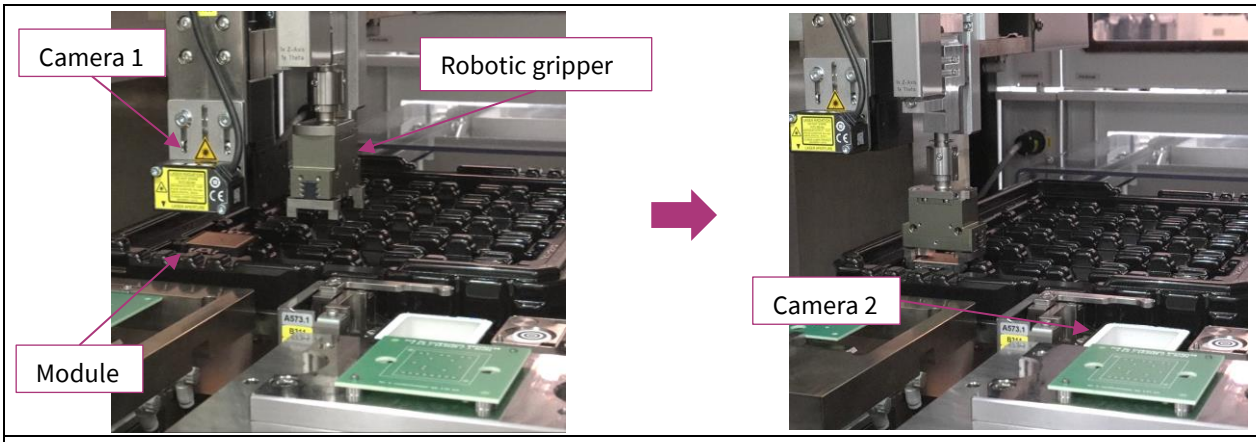

Step 1	Step 2
Before the module can be removed from the original package by the robotic gripper, the position of the gripping surface (G3, see Figure 8) within the fame must be detected by camera 1.	The module is gripped at the G3 surfaces and pans to camera 2 to determine the center of gravity of the module via the diagonal alignment hole in the housing.

Figure 12 **Fully automated placement process for the EasyPACK™ S modules – Part 1**

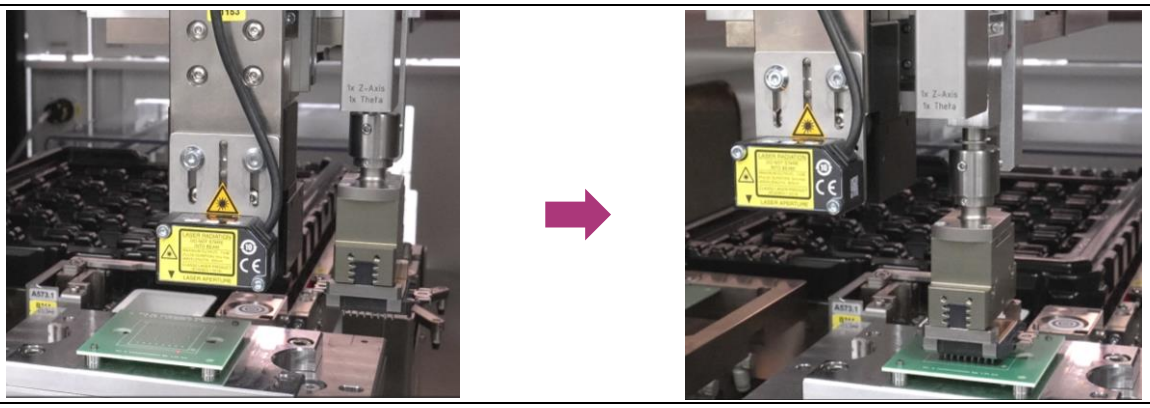

Step 3a	Step 3b
Then the PCB fiducial points, such as the diagonal through holes, are detected by camera 1.	Finally, the module can be placed in the proper position on the PCB.

Figure 13 **Fully automated placement process of EasyPACK™ S modules – Part 2**

To prevent misalignment and incorrect threading of the modules onto the PCB, the force, displacement and/or speed should be defined and controlled. Please ensure that the force is not greater than 30 N and the path is no longer than defined in section 3.4. After threading, the module can be pressed into the PCB with the additionally required press-in machine.

4.2.2 Typical semi-automatic press-in process for the EasyPACK™ S: One by one

In the semi-automatic press-in process, an operator threads the modules into the PCB before starting the actual press-in procedure with the required machines. To ensure a reliable connection, it is essential to control the distance between the modules and the PCB. This is typically achieved using a distance keeper or similar mechanism. Significant differences in height within the components can lead to mechanical stress and negatively impact the thermal performance. Figure 14 shows the upper tool, already equipped with columns, that provides a defined distance of 6 mm +/- 0.05 mm. Regardless of the number of modules, pressing the modules till they touch the PCB surface is not allowed.

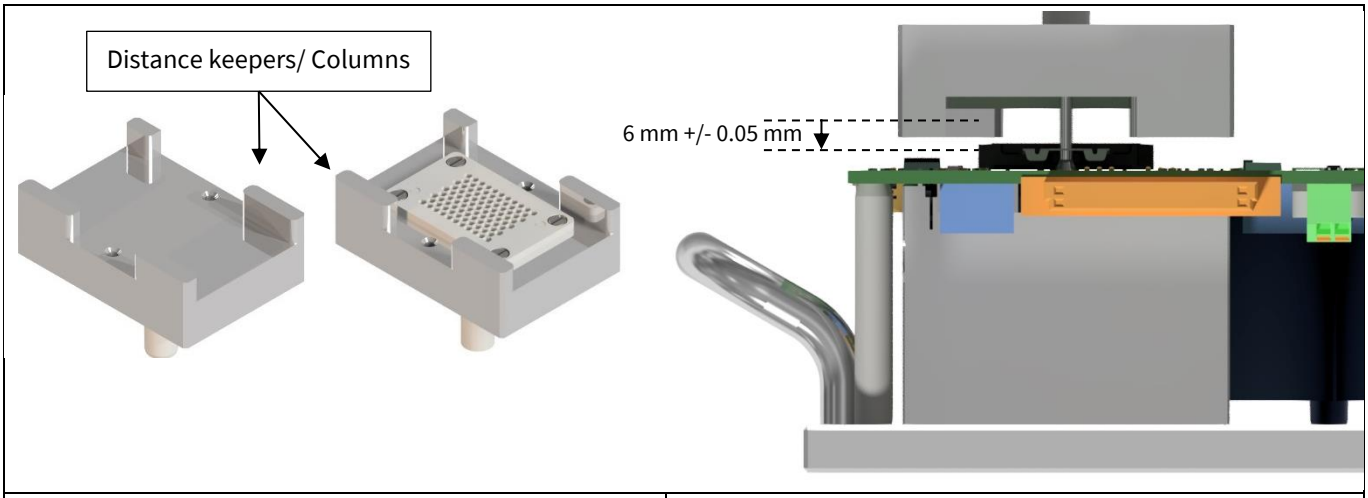

a) Pre-applied TIM and a standard press in tool	**b)** Height of the distance keeper

Figure 14 **Upper press-in tool for EasyPACK™ S with the defined distance**

During the press-in process, the distance keeper touches the top side of the PCB, and a certain amount of force is transferred to the PCB. This is therefore crucial to support the PCB using a bottom tool to prevent the PCB from bending significantly.

Figure 15, Figure 16 and Figure 17 show the typical semi-automatic press-in procedure for an EasyPACK™ S package.

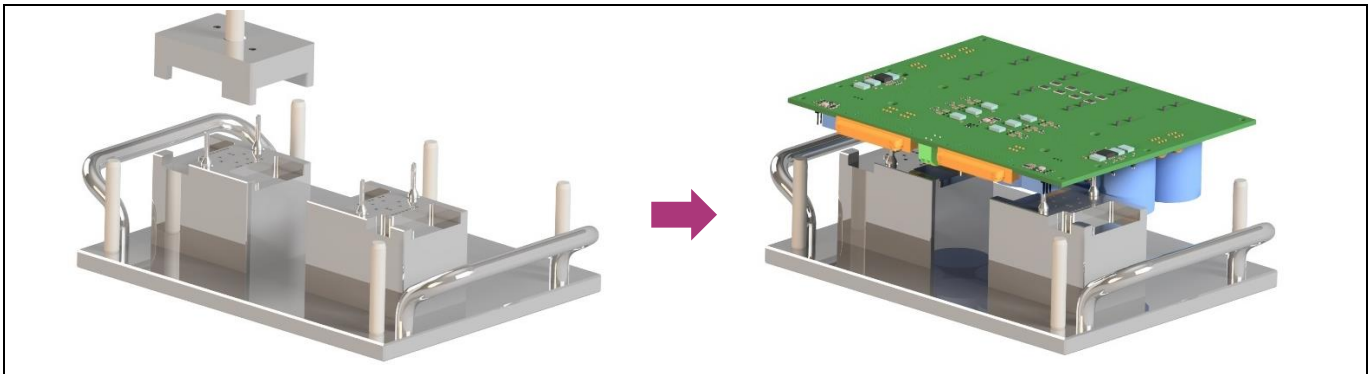

Step 1	**Step 2**
Before starting the press-in process, ensure that the tools are clean and free of dust/dirt. Then set the proper settings in the press-in machine.	Place the PCB onto the bottom tool aligning with the corresponding cylindrical pins of the bottom tool.

Figure 15 **Typical semi-automatic press-in process for the EasyPACK™ S modules – Part 1**

Press-in process

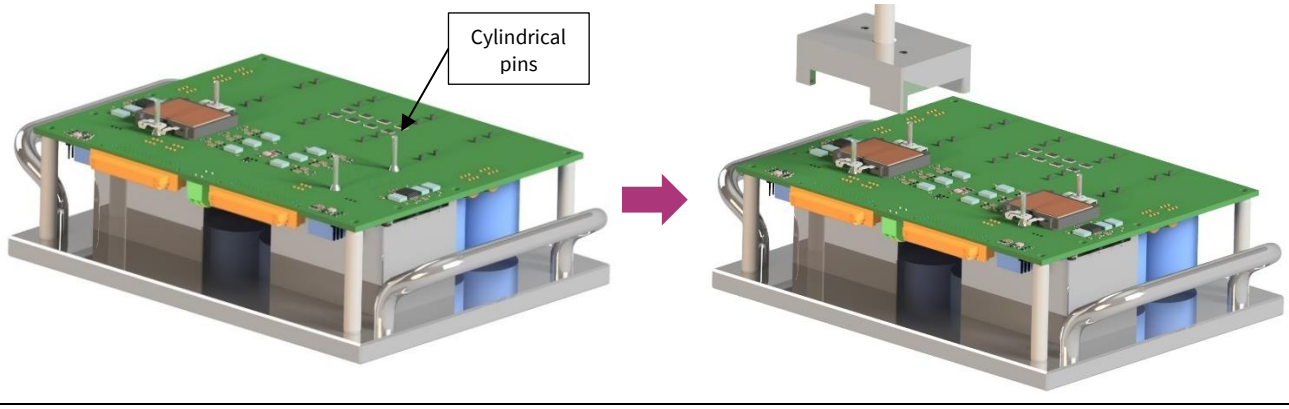

Step 3	Step 4
Place the module onto the PCB via these cylindrical pins. The module's pressFIT pins should be inserted into the plated through-holes of the PCB before starting the press-in process.	Align the bottom tool with the upper tool or with the separate U-distance keeper. Use the cylindrical pins of the bottom-tool as orientation for proper alignment.

Figure 16 **Typical semi-automatic press-in process of EasyPACK™ S modules – Part 2**

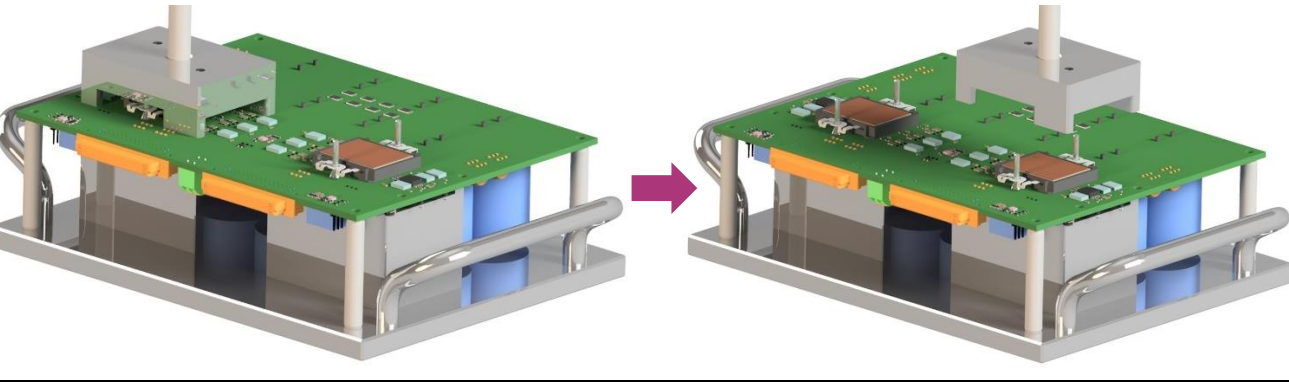

Step 5	Step 6
Press the modules into the PCB one after the other by applying downward pressure on the upper tool.	After pressing in the last module, remove the upper-tool/distance keeper and the PCBA from the bottom tool.

Figure 17 **Typical semi-automatic press-in process for the EasyPACK™ S modules – Part 3**

When pressing in the modules with a pre-applied thermal interface material (TIM), it is essential to use an upper tool. This tool is designed to protect the TIM, preventing its destruction and ensuring optimal thermal performance. The semi-automatic process needs to be investigated and validated in the production line.

4.2.3 Typical semi-automatic press-in process for the EasyPACK™ S: Simultaneously

To press-in several modules at the same time, a stable and reproducible process is required to achieve good coplanarity between the modules and the PCB. Ensure that the force is exerted over a relatively large surface area of the upper tool, or provide sufficient stiffness within the tools to prevent bending during the process. The bottom tool must also support the areas where the force is transferred by the upper tool. Figure 18 shows the tooling and approach for pressing in multiple modules at the same time.

Press-in process

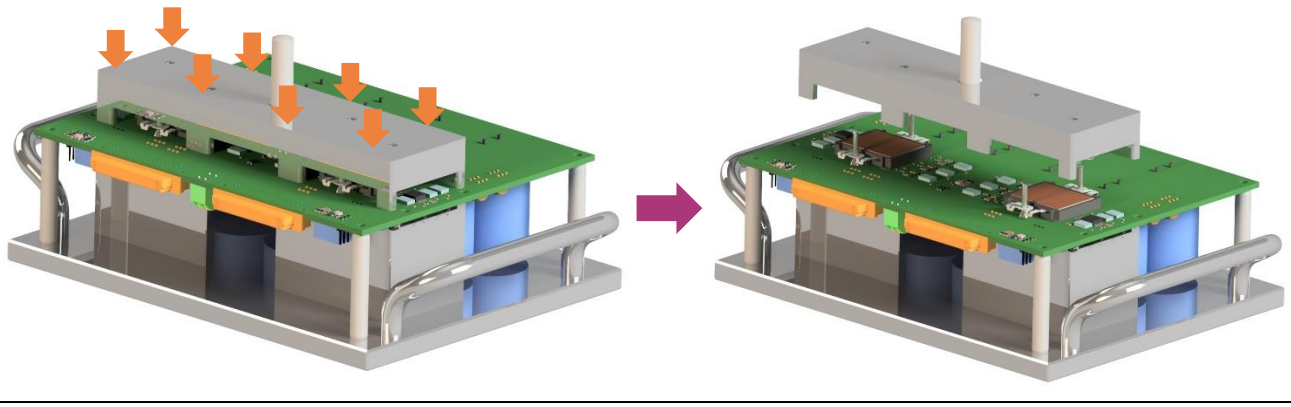

Step 5	Step 6
Press the modules into the PCB at the same time by applying downward pressure on the upper tool.	After the press-in process, remove the upper-tool/distance keeper and the PCBA from the bottom tool.

Figure 18 **Typical semi-automatic press-in process for several EasyPACK™ S modules at the same time – Part 3**

4.3 Press-in tools

The following press-in tools are recommended for pressing the EasyPACK™ S into the PCB.

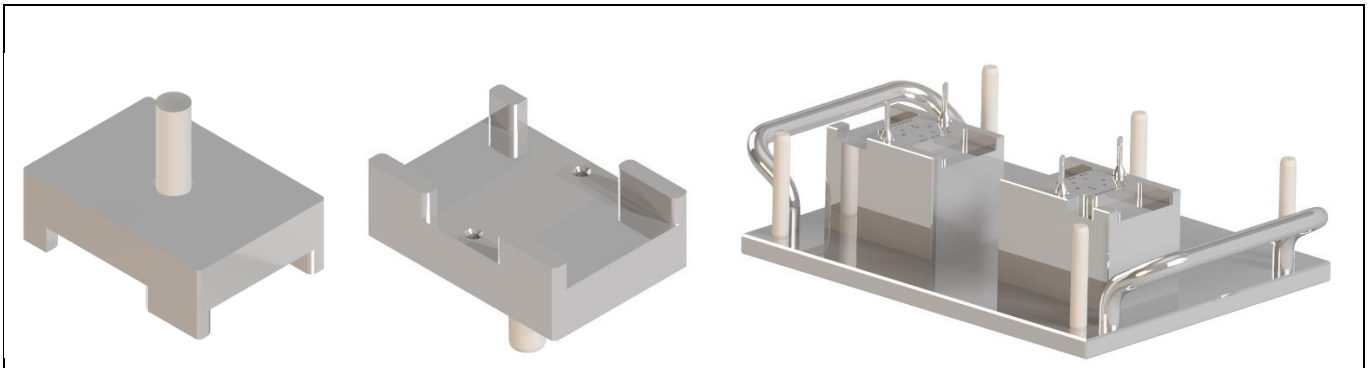

a) Top and bottom view of the upper tool	**b)** Example of a bottom tool

Figure 19 **Press-in tool for the EasyPACK™ S modules**

The press-in tools are made of two parts. The first part presses against the bottom of the module, and the second part supports the PCB during the press-in process. When pressing several modules into a single PCB, the tools must be designed such that the modules are at the same level after pressing. This way, the modules can be mounted on the heat sink with a good thermal connection. The tools can also be manufactured from a single metal piece to reduce the tolerances as much as possible.

To prevent damage during the press-in process, the tools must be designed and manufactured with corresponding recesses to avoid a collision with other electrical components on the PCB, such as the SMD components. In this case, keeping a distance of 4 mm from the pin center to the outer edge of the other components is recommended. This will enable proper support and a less complicated manufacturing process of the tooling. If the distance is less than 4 mm, the entire press-in process should be reviewed and reevaluated. The most important point is to support the plated through-holes, and areas where the force is transferred from the upper tool to the PCB as comprehensively as possible.

The files of the press-in tools can be shared upon request but need to be adjusted according to different requirements (e.g., module pinning and top-side assembly of other parts). The tools can be produced by a manufacturer of choice.

4.4 Press-in process parameters

This section discussed the press-in process parameters that are useful for obtaining a highly reliable and mechanically stable Press-fit connection between the EasyPACK™ S modules and the printed circuit boards.

4.4.1 Press-in behavior

Monitoring the press-in process is very important. A press-in machine with a controlled force-distance method is recommended for serial production to ensure consistent quality and reproducibility of the press-in process.

A module can be pressed into a PCB either via a defined path-controlled displacement or by using appropriate distance keepers. Optionally, the four stand-off holes of the module can also be used for pressing in a single module into the PCB as a stop criterion. After a significant slope change in the press-in force at the end of the curve, the process is complete in principle because the effective part of the press-in process is done.

Further pressing increases the force on the housing. It is therefore beneficial to track the changing point in the slope, and to stop the press-in process as soon as the point is detected.

There is no significant difference between using distance keepers or module stand-offs as a stop criterion. A slight change might still be seen in the rising trail at the end in the slope of the curve due to different material rigidities.

There is a difference in the curve progression between the press-in process using distance keepers and in the path-controlled procedure where a gap is set between the module and the PCB at the end of the process. In the path-controlled procedure, there is no rising trail at the end of the curve due to the lack of contact with the PCB surface.

Depending on factors such as the hole diameter, metallization, and stiffness of the PCB, the press-in curve of the high-current PressFIT pins can pose some differences in the progression and in the total press-in force.

Figure 20 displays a typical press-in curve of an EasyPACK™ S module, which is equipped with 21 high-current PressFIT pins.

Press-in process

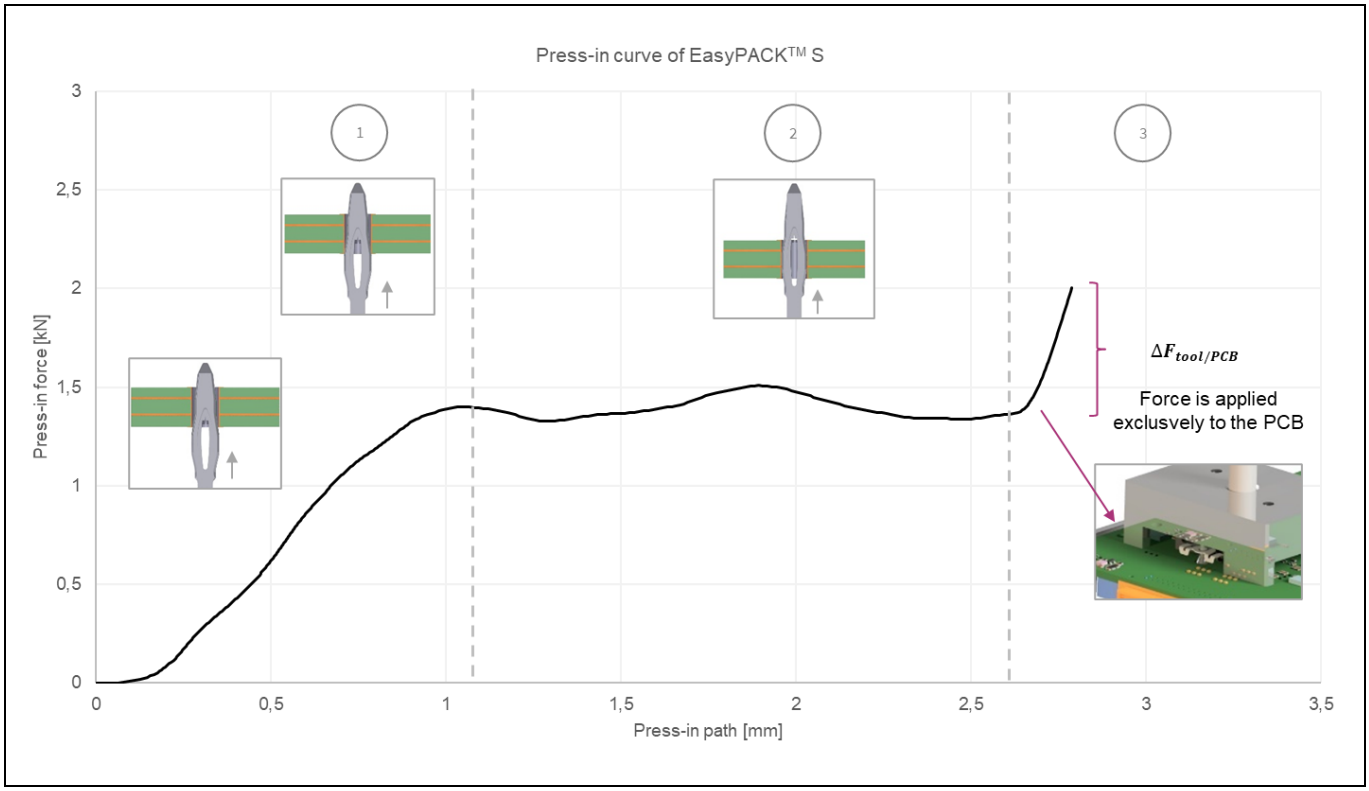

Figure 20 **A typical press-in curve of an EasyPACK™ S module with 21 high-current PressFIT pins**

In general, the press-in curve is related to different phases of the press-in path. It can be divided into three main phases. The first phase (1) indicates the beginning of the PressFIT zone within the plated through-holes of the PCB. The PressFIT zone first contacts the plated through-hole of the PCB and deforms to a certain extent when the module continues to be pressed down. At this moment, the press-in force increases evenly. The first curve peak is caused by the geometry of the PressFIT zone. Depending on the metallization, stiffness, and especially the final diameter of the PCB hole, this peak is more or less pronounced in the curve. The smaller the holes, the more visible this peak will be, i.e., a hole with a small diameter will lead to a steep rise in the press-in force.

In the second phase (2), the press-in force decreases until the second peak is reached. At this point, the PressFIT pins are pressed to the final position with the widest circumference of the PressFIT pin and subjected to the maximum permissible deformation. The press-in contact zone is then completely within the plated through-hole of the PCB.

The subsequent third phase (3) is generated by the contact of the distance keeper or module housing with the PCB. In this example, the effective press-in process is successfully completed at the slope change, at about z = 2.6 mm. However, this value does not apply to all press-in processes and is for reference only. It may vary depending on the level of zero. In this case, the module has been subjected to a total force of 1.5 kN.

4.4.2 Press-in force and speed

The total press-in force is generated by the number of pins and can vary depending on several factors such as the type of PCB, the hole diameter, or the metallization used in the PCB. For inserting an EasyPACK™ S module into a PCB using high-current PressFIT pins, approximately 50 N to 80 N of force would be applied per pin in the module. Table 4 lists the maximum PressFIT force per pin.

Press-in process

Table 4 **The PressFIT speed and force per pin**

	High-current PressFIT pin	
Press-in force per pin	Typically 60 N	< 80 N maximum
Press-in speed	> 25 mm/min according to IEC 60352-5 qualification 100 mm/min recommended	

To enable a controlled shutdown process, a maximum force is required. This can be configured in the press-in machine. Once this force is reached, the process is automatically completed. This force also acts as a safety feature to prevent incorrect handling, such as misalignment of the tools and components.

The maximum force can be determined based on the number of pins, including a safety margin. However, it is crucial to understand that the safety margin is not intended to exceed the maximum press-in force of each pin. The safety margin values vary because of the different press-in curve progression and the design characteristics of individual PressFIT pins.

The following examples illustrate how the maximum total press-in force can be defined based on the number of PressFIT pins:

$$F_{max,PressIn} = Number\ of\ Pins * F_{max,PressIn/pin} * 1,X$$

$$F_{max,PressIn}(21\ Pins) = 21\ Pins * 80\frac{N}{Pin} * 1{,}10 = 1848\ N$$

Please note that these values must not be exceeded to prevent damage to the module or PCB. However, lowering these values is possible. It depends on the actual resulting press-in forces because the minimum total press-in force required can vary depending on the properties of the PCB. As a result, the $\Delta \boldsymbol{F}_{\boldsymbol{tool/PCB}}$ value, which represents the force that is transferred exclusively to the PCB, can be affected. This value can be taken from the last phase section (3) of the press-in curve, as shown in Figure 20. So, to avoid excessive forces on the module's housing or the PCB, reduce the $\Delta \boldsymbol{F}_{\boldsymbol{tool/PCB}}$ through quality control of the PCB. For example, by measuring the final diameter of the hole and initial testing of the press-in forces. This approach allows the force to be minimized while ensuring the required safety.

The press-fitting speed cannot be lower than 25 mm/min according to IEC 60352-5. Infineon recommends a press-in speed of about 100 mm/min. The typical press-in speed for automated assembly lines is up to 450 mm/min. [1]

5 Press-out process

The EasyPACK™ S modules can be removed using appropriate tools just like the EasyB modules [1]. The tools consist out of two parts. The upper part of the tool presses directly downwards on the module pins. The lower part of the tool holds the module with the PCB, and serves as a base for the pressing operation.

The PCB is placed with the EasyPACK™ S module on the device tray. To press a module out of a PCB, a force of approximately > 40 N has to be applied for each pin in the module. The extruding forces depend mainly on the diameter of the hole in the PCB.

The press-out tools must be aligned parallel to each other so that the individual components (such as the PCB and module) are not damaged. Once the PressFIT zone has been lifted from the PCB, the module falls onto the tray in the lower part of the tool and is separated from the board.

The dimensions of the press-out tool must be considered when designing the PCB so that the components positioned around the module will not be damaged. [1]

6 Quality of the PressFIT contacts

PressFIT is a solution for connecting the control and load current contacts on IGBT modules with a PCB.

As an advanced technology in the market, the PressFIT makes it possible to improve reliability up to a factor of 100 compared to manually soldered contacts and other contact types. This value was obtained from reliability analyses based on Siemens standard SN 29500-5.

The PressFIT assembly process is simple and therefore saves time and money. The process is reliable, and system reparability is ensured.

An extract from the Siemens standard SN 29500-5/Edition 2004-06 Part 5 is listed in Table 5. It shows the failure rates of different contact technologies.

Table 5 **Failure rates of various contact technologies: Siemens standard SN 29500-5/ Edition 2004-06 Part 5**

Process	**Conductor diameter in mm²**	**Failure rate λref in FIT[1])**	**Notes: Standards/guidelines**
Solder manual Automatic	_	0.5 0.03	IPC 6102, class 2
Wire bonding for hybrid circuits Al Au		0.1 0.1	28 µm/wedge bond 25 µm/ball bond
Winding	0.05 to 0.5	0.002	DIN EN 60352 – 1/ IEC 60352 – 1 CORR1
Crimping manual Automatic	0.05 to 300	0.25	DIN EN 60352 – 2/ IEC 60352 – 2 A 1+2
Clips	0.1 to 0.5	0.02	DIN 41611 – 4
PressFIT	0.3 to 2	0.005	IEC 60352 – 5
Insulation piercing connectors	0.05 to 1	0.25	IEC 60352 – 3/IEC 60352 – 4
Screws	0.5 to 16	0.5	DIN EN 60999 – 1
Terminals (spring force)	0.5 to 16	0.5	DIN EN 60999 – 1

[1] 1 FIT = 1 x 10-9 1/h, (one failure per 109 component hours)

The PressFIT contact has been qualified in accordance with the usual standards for power semiconductor modules at Infineon.

Figure 21 shows a small extract from various qualification tests. The extract shows that the conditions in the individual tests are to be regarded as considerably stricter than stated in the standards. For example, in a corrosive gas test, the temperature in scope for individual tests is 15 K higher than the condition in the standard, and the H2S concentration is five times higher than the conditions according to the norm. The green fields show the test conditions according to the norm, which is less critical than in the individual tests.

Quality of the PressFIT contacts

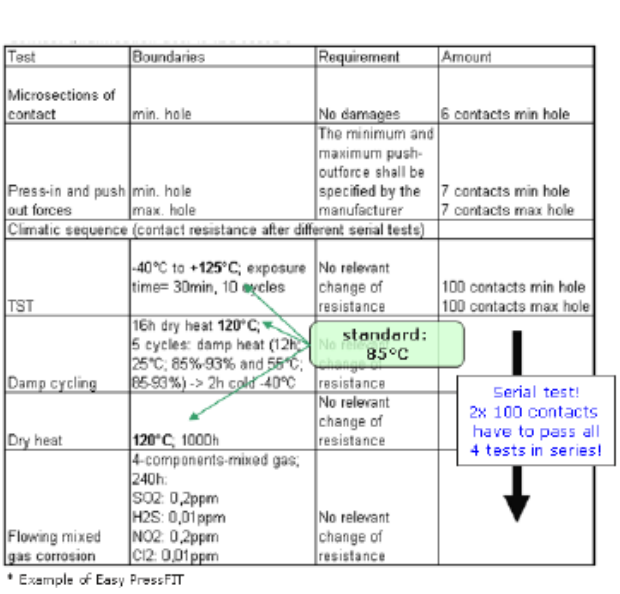

Single-pin qualification according to IEC 60352-5

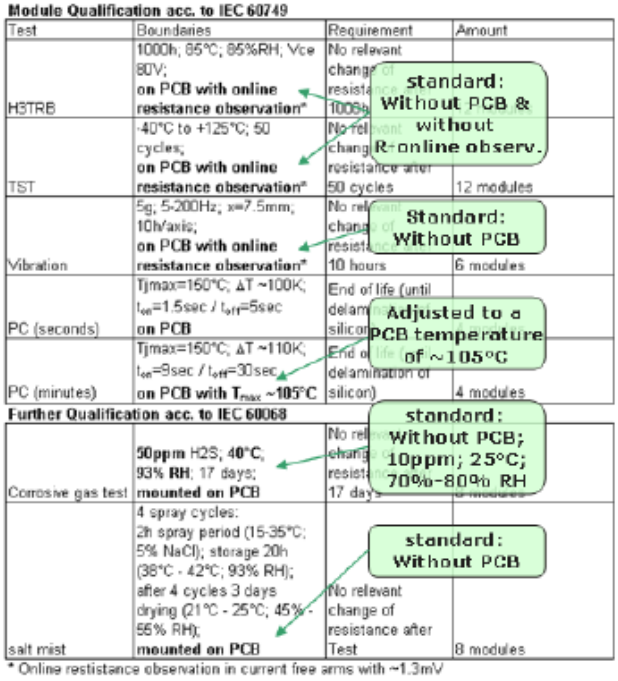

Module qualification according to IEC 60749 and 60068

Figure 21 **Extract from qualification tests**

Further details on individual tests are available in various publications, such as “Reliability of PressFIT connections” at www.infineon.com. [1]

7 Heat sink requirements for module assembly

The power losses in the module must be transferred to a heat sink to ensure that the module operates within the maximum temperature (T_{vjop}) specified for the to achieve the intended electrical and lifetime performance. During the operation, the module-frame temperature must not exceed 175 °C. Otherwise, the UL standard ratings will be violated.

The condition of the heat sink's surface where the module is mounted is very important. This interface between heat sink and module has a decisive influence on the heat transfer of the entire system.

The contact surfaces, the surface below the module, and the surface of the heat sink must be free of degradation and contamination. This helps avoid excess mechanical stress on the module and unwanted rise in thermal resistance.

The contact surface between the module and the heat sink should not exceed the following values:

- Locally below the EasyPACK™ S with a length of 36.5 mm, the surface flatness must be ≤ 18.25 µm
- Surface roughness Rz ≤ 10 µm
- Steps ≤ 10 µm

Note 1: The flatness of the heat sink should not exceed the values listed above. This area includes the entire module mounting area as well as that of the clamps.

Note 2: If the layer of thermal grease applied is too thick, e.g., due to cavities, the thermal resistance, R_{th}, between module and heat sink will increase. [1]

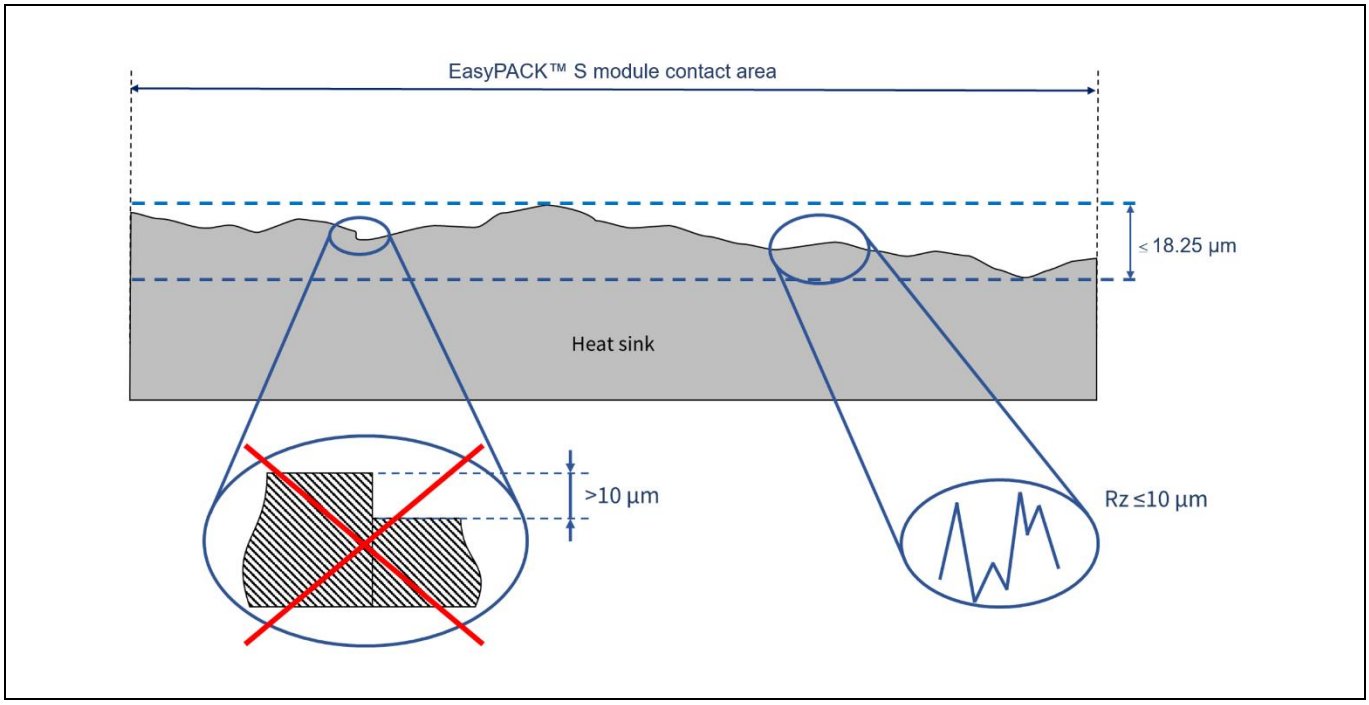

Figure 22 **Recommendations for heat sink surface**

8 Assembling the EasyPACK™ S on a heat sink

The EasyPACK™ S is mounted onto the heat sink using M3 cylindrical head screws. To maintain compliance with the creepage distance, using washers is not allowed.

The module design is optimized for compatibility with an automated screwing process. An automated screw driver with vacuum suction for automotive requirements must be used. The maximum diameter of the tool's vacuum tube should be 8 mm, as shown in Figure 23.

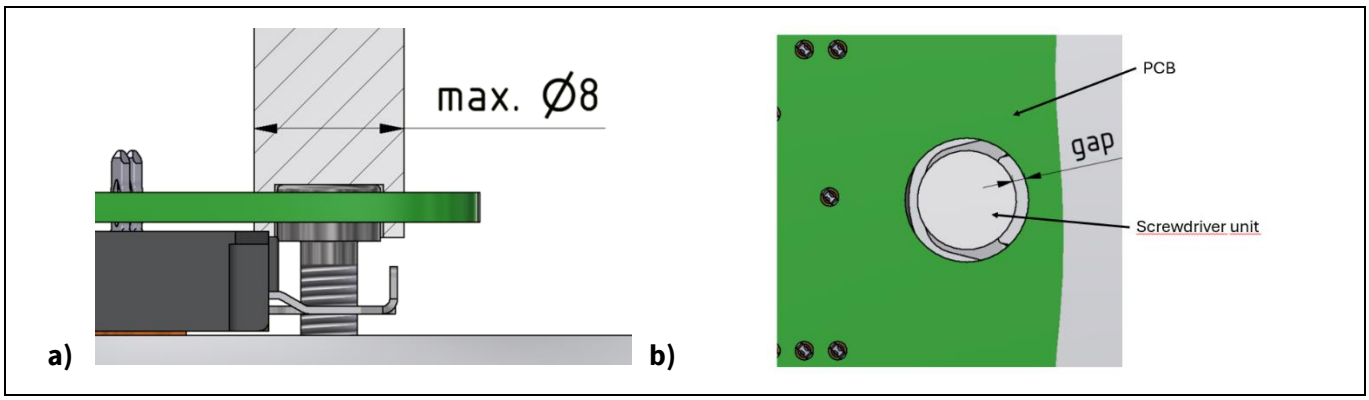

Figure 23 **(a) Automated screwdriver unit**
(b) Keep-out area in the PCB for the screwdriver unit

Note: If the module is first pressed into the PCB, or if a later disassembling of the module is desired, the PCB must contain suitable through-holes. The hole size depends on the screwdriver's size or the screw's head diameter.

The module should be positioned onto the heat sink such that the holes of the screw clamps are exactly above the threaded holes in the heat sink. The mounting surface must be clean and free of contamination.

The module can be fastened by screwing in and tightening both the screws at the same time (Figure 24 (a)) or by holding the module down during the mounting process with a force of approximately 10 N to prevent the module from lifting (Figure 24 (b)).

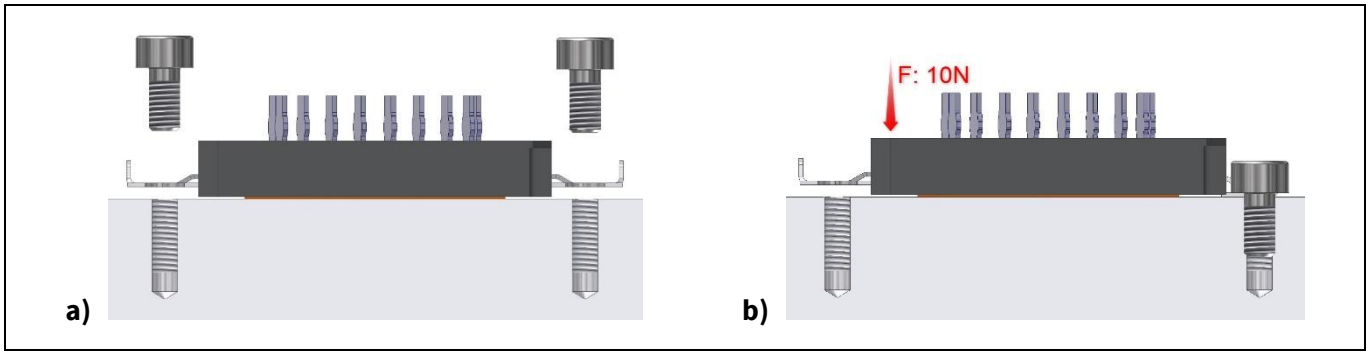

Figure 24 **Module fastening options: a) Fastening the module by simultaneously screwing in and tightening the screws. b) Fastening the module while holding down the module during screwing**

Note: Compliance with creepage distance must be checked at the system level depending on the screw used (see chapter 10).

Assembling the EasyPACK™ S on a heat sink

Alternatively, fasten the module by applying one initial screw and then tightening both screws sequentially. It is important that the module does not lift. To prevent this:

1. Tighten the first screw loosely to avoid a press force on the clamp (Figure 25 (a)).
2. Tighten the second screw completely (Figure 25 (b)).
3. Tighten the first screw completely (Figure 25 (c)).

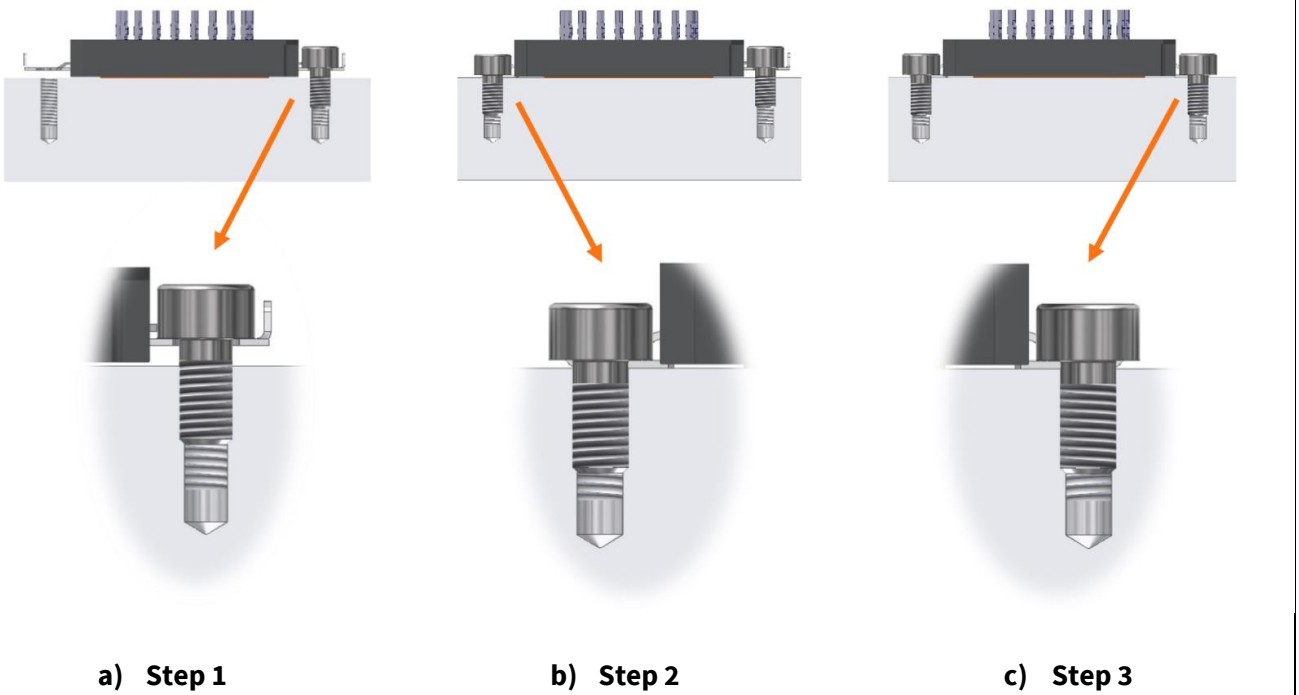

Figure 25 **Fasten the module by applying one initial screw and tightening both screws sequentially**

The maximum tightening torque depends on the strength class of the screw and the material alloy of the heat sink chosen. The M3 screw with strength between class 4.6 and 6.8 is generally recommended for the common heat sinks. Table 6 lists the recommended values for the mounting process.

Table 6 **Technical data of the mounting screw**

Description	Values
Mounting screw	M3 – cylindrical head screws according to ISO 4762
Recommended mounting torque	Ma = 0.6 Nm [1]
Aluminum cast alloy	2.2 x d = 6.6 mm [2]
Aluminum alloy hardened	1.2 x d = 3.6 mm [2]
Aluminum alloy not hardened	1.6 x d = 4.8 mm [2]

[1] The maximum permissible mounting torque of the screw must not be exceeded.

[2] As per technical literature.

9 System considerations for mechanical robustness

If the module is correctly mounted on the heat sink and the PCB, the screw clamps apply the necessary pressure. This pressure, together with the correct amount of thermal grease, ensures low thermal resistance and an optimal thermal flow between the module and the heat sink. Since the PCB is connected to the module only by pressed-in pins, suitable measures have to be taken to ensure that vibrations are kept to a minimum.

Any possible movement between the terminals and the module's case has to be avoided. Each pin may only be subjected to a maximum press and pull force of 6 N vertical to the heat sink. The overall pulling force on the module must not exceed 20 N. The compressive force could be 10 times higher than the possible pulling force. A low compressive load to the module is preferred. Therefore, an additional PCB should be fixed to the heat sink at a position close to the module. In principle, this can be done in several ways depending on the number of modules used, and on the type of the press-in procedure. [1]

9.1 Assembling single module on the PCB

This process is similar to the assembly instructions for pressing multiple modules on a PCB. A single module can also be inserted into the PCB at a defined distance of 6 mm +/- 0.05 mm. The distance keepers of the press-in process for EasyPACK™ S are described in section 4.2.2.

In this case, the distance keepers can be positioned as close as possible to the module to connect the PCB to the heat sink. Ensure that the distance keepers used during the press-in process are of the same height as those used in the system. This will prevent any mechanical stress. A small air gap remains between the module and the PCB as shown in Figure 26.

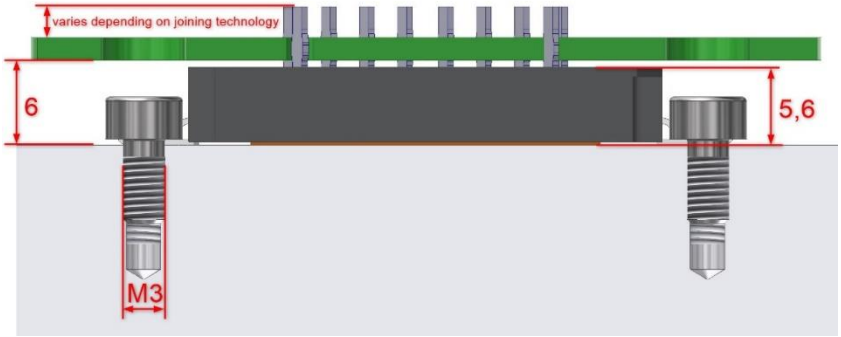

Figure 26 **Final assembly of EasyPACK™ S (drawing not true to scale)**

9.2 Assembling multiple modules on the PCB

To assemble several modules on a PCB, the modules have to be pressed into the PCB at a certain distance, as explained in section 4.2. The module's height tolerance is then quasi compensated by this press-in process. In this case, the distance keepers between the PCB and the heat sink can be close to the power modules. The position of the distance keepers should be designed symmetrically around the power module(s).

The height of the PCB-to-heat sink distance keepers should be exactly the same as those used in the press-in process.

For applications including EasyPACK™ S with an Al_2O_3 DCB, the height (H) of the distance keeper indicated in Figure 27 should typically be 6 mm ± 0.05 mm.

System considerations for mechanical robustness

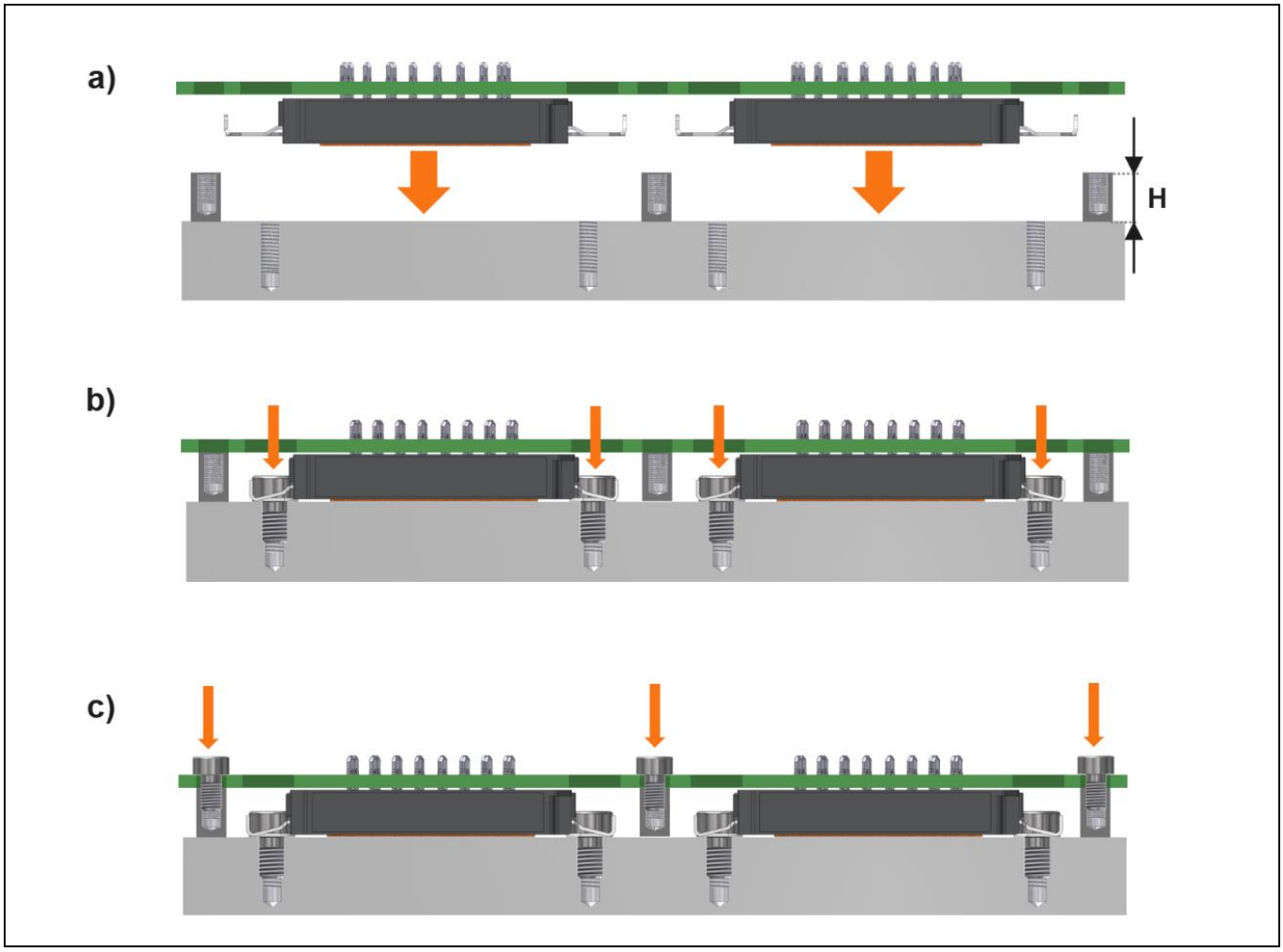

Figure 27 **Mounting the PCB and multiple modules on the heat sink (drawing not true to scale)**

As the value (H) must not be higher than the press-in height, no pull forces are applied to the power modules. This is critical considering the thermal contact between the module and the heat sink.

Note: It is possible to press the module tighter to the PCB than the maximum 6.05 mm. This will increase the overlapping zone in the active press zone (contact area: pin to PCB). Please remember to lower the fixing elements of the cooling system accordingly if the modules are pressed tighter to the PCB. The value (H) must not be higher than the press-in height. The PCB's force on the module in the direction of the cooling system is not critical, but is desired as it improves the thermal contact.

10 Clearance and creepage distances

According to the 3rd revision of IEC 60664-1, mechanical tolerances must be considered when calculating the clearance and creepage distance. This chapter provides an overview of the creepage distance and clearance for the EasyPACK™ S modules to enable a design based on the requirements. These values can be used as the initial check for the fulfillment of application conditions. If the module clearance or creepage distance is not sufficient for the application, please contact the Infineon sales office for technical support.

10.1 Package-implemented creepage and clearance distances

This section gives an overview of the clearance and creepage distances implemented at a package level, without considering the module-specific aspects, such as a particular pin layout. Figure 28 shows a sketch of the cross-section of an EasyPACK™ S module and its surroundings in an application:

- P_{Mi} are potentials of the module. They are drawn in orange to indicate functional insulation in general (notable exceptions are possible NTC pins)
- P_{Ei} are potentials external to the module. They are drawn in red and orange to indicate that they can have basic or functional insulation
- P_{HS} is the potential of the module's backside including its fixtures (module clamps and screws) and external heat sink. It is drawn in red to indicate basic insulation

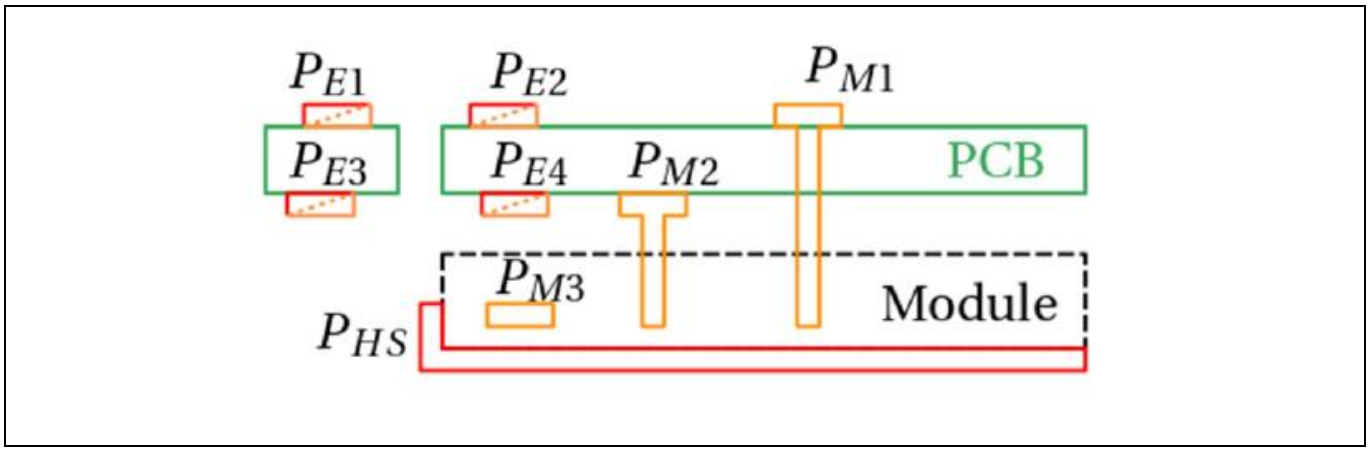

Figure 28 **Sketch of EasyPACK™ S module's cross-section, and its surroundings**

Table 7 gives an overview of the implemented distances between these potentials.

Clearance and creepage distances

Table 7 **Clearance and Creepage of EasyPACK™ S**

	Clearance	Creepage
P_{Ei} – P_{Mi}	• Vertically the worst-case air gap from bondwire or component inside EasyPACK™ S module to the PCB (e.g., P_{M3} to P_{E4}): **2.55 mm** • Horizontally from the Cu ring to the PCB track (e.g., P_{M2} to P_{E4} or P_{M1} to P_{E2}): Depends on the system design	Horizontally from the Cu ring to the PCB track (e.g., P_{M2} to P_{E4} or P_{M1} to P_{E2}): Depends on the system design
P_{HS} – P_{Mi}	The worst-case clearance distance between the module and the screw-in clamp: **6.6 mm**	The worst-case creepage distance between the module and the screw-in clamp: **12.47 mm**
P_{HS} – P_{Ei}	Vertically from the screw head to the PCB (e.g., P_{E3} or P_{E4}): **2.5 mm** *Note: This calculation is based on an M3 cylindrical screw according to ISO 4762*	PCB track to the module's backside (e.g., P_{HS} to P_{E4} or P_{HS} to P_{E3}): Depends on the system design

Note: Based on the PCB requirements given in section 2.1, the critical path with respect to creepage and clearance distances between two pins is at the PCB level and not at the module level. Thus, the critical creepage and clearance distances need to be checked for the customer's PCB and can be derived from the pin-to-pin distance of the PCB hole pattern given in individual datasheets.

References

[1] Infineon Technologies AG. AN2009-01: Assembly Instructions for the Easy Modules. Revision 1.0; https://www.infineon.com/assets/row/public/documents/60/42/infineon-an2023-07-assembly-instructions-for-the-easy-modules-applicationnotes-en.pdf

[2] Infineon Technologies AG. https://www.infineon.com/product-information/power/igbt/igbt-modules/easy/easypack-s

Revision history

Document revision	Date	Description of changes
1.0	2026-04-17	First revision
1.1	2026-05-29	Update PCB requirements for soldering the PressFIT modules

Trademarks
All referenced product or service names and trademarks are the property of their respective owners.

Edition 2026-05-29

Published by

Infineon Technologies AG

81726 Munich, Germany

© 2026 Infineon Technologies AG. All Rights Reserved.

Do you have a question about this document?

Email: erratum@infineon.com

Document reference

AN-2026-02

Important notice

The information contained in this application note is given as a hint for the implementation of the product only and shall in no event be regarded as a description or warranty of a certain functionality, condition or quality of the product. Before implementation of the product, the recipient of this application note must verify any function and other technical information given herein in the real application. Infineon Technologies hereby disclaims any and all warranties and liabilities of any kind (including without limitation warranties of non-infringement of intellectual property rights of any third party) with respect to any and all information given in this application note.

The data contained in this document is exclusively intended for technically trained staff. It is the responsibility of customer's technical departments to evaluate the suitability of the product for the intended application and the completeness of the product information given in this document with respect to such application.

Warnings

Due to technical requirements products may contain dangerous substances. For information on the types in question please contact your nearest Infineon Technologies office.

Except as otherwise explicitly approved by Infineon Technologies in a written document signed by authorized representatives of Infineon Technologies, Infineon Technologies' products may not be used in any applications where a failure of the product or any consequences of the use thereof can reasonably be expected to result in personal injury.