650 V TRENCHSTOP™ 5 D²Pak IGBT

Improving performance of a portable welding machine power supply using SMD on IMS

About this document

Scope and purpose

Industrial applications using power semiconductors are in continuous development and always demand better performance to meet constantly growing customer requirements. Specifically, for the IGBT market, motor drives were considered for a long time the main application, but now other industrial applications typically operating at higher switching frequency ranges are gaining higher importance. These new applications have evolved significantly in recent years, and now include uninterruptible power supplies (UPS), photovoltaic inverters, EV charging stations and welding power supply applications.

In the case of welding power supply applications, the power range of portable welding machines, a very performance-demanding and cost-intensive segment, shows very interesting potential for IGBTs optimized for specific application needs and unconventional assembly methods. For instance, using the fast-speed switching 650 V TRENCHSTOP™ 5 IGBTs, it is possible to reach higher switching frequencies, and thus reduce the size of magnetic components and/or filters, as well as overall system size and weight. In addition, in contrast to the state-of-the-art welding converter designs mainly using discrete IGBTs in through-hole packages, like TO-247 IGBTs, the 650 V H5 TRENCHSTOP™ 5 IGBTs in D²Pak (TO-263-3) packages allows assembly of surface-mounted devices (SMD) on an insulated metal substrate (IMS).

This power-converter design solution using IGBTs in SMD packages mounted on IMS has resulted in a lower stray inductance, with more compact overall system size, lower weight and reduced cost. In summary, the combination of optimized performance semiconductors, combined with the use of unconventional solutions such as IMS, can enhance the performance and reduce the cost of portable welding machines.

This document proposes, explains and demonstrates an improved solution for portable welding machines power supply based on half-bridge converter topology using SMD-on-IMS assembly, as well as the enhancement to the proposed solution by using 650 V TRENCHSTOP™ 5 D²Pak package IGBT. Furthermore, it illustrates Infineon's products in portable welding machines, including the 650 V TRENCHSTOP™ 5 IGBT, EiceDRIVER™ and 600 V Emitter-Controlled Diode. Note that it is not the intention to present a system-reference design that can be copied and pasted into a new system design.

Intended audience

This document is intended for a technical audience with a minimum knowledge of power electronics and thermal management design.

Table of contents

About this document **1**
Table of contents **1**
1 Introduction **3**
1.1 Portable welding machines overview 4
1.2 Converter topologies in the portable welding machines 5
1.3 Power semiconductor switches for portable welding machines 6
2 Welding machine power supply using SMD-on-IMS solution **8**

Table of contents

2.1 Insulated metal substrate (IMS) technology 9
2.2 Selecting the right IMS for the application 10
2.2.1 Copper foil thickness definition 10
2.2.2 Dielectric insulation material selection 11
2.2.3 Metal base plate selection 11
2.3 Thermal system design of converter 11
2.4 Converter's IMS selection 13
2.5 TRENCHSTOP™ 5 D²PAK IGBTs on IMS assembly guidelines 14
3 Welding machine improvement with SMD on IMS 16
4 Conclusion and future work 18
5 Appendix - Welding machine power supply schematics 19
6 References 21
Revision history 22

1 Introduction

Portable welding machines is a rather big market with a relatively high annual growth rate that is expanding rapidly mainly in developing countries driven by the increasing number of construction projects. The annual growth is defined not only by the increasing market size, but also by the high replacement ratio of the existing equipment. The average lifetime of a welding machine at a construction site usually does not exceed 2 years, thus every machine produced more than 2 years ago has to be replaced with a new one.

The large market and stable growth rates are attracting many component suppliers, thus competition is increasing and average component prices are declining. Although the price has significant influence on the selection of power components, the reliability and performance of the device are highly important. Moreover, the optimization of power switches for a specific electrical performance, i.e. switching speed, or specific topology type, is relevant and valued. For this reason, Infineon has developed several variants of its recent best-in-class TRENCHSTOP™ 5 IGBT technology, optimized for specific applications and switching frequency range, as shown in Figure 1. The fast and ultra-fast speed switching H5 and F5 IGBT series are developed for switching frequencies above 30 kHz and 60 kHz respectively. The medium-speed switching S5 series features high efficiency and smooth switching behavior. The ultra-low saturation voltage L5 series with $V_{CE(sat)}$ = 1.05 V, optimized for polarity switches operating at switching frequencies from 50 Hz to 20 kHz, and the cost-performance optimized, reverse-conducting WR5 IGBT series, suitable for PFC and zero current switching (ZCS) resonant topologies, delivers high-level performance at a reasonable price.

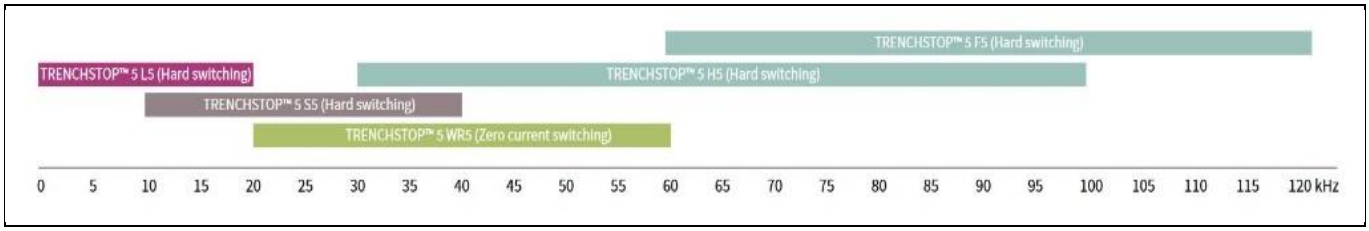

Figure 1 TRENCHSTOP™ 5 IGBT technology family series H5, F5, L5, S5, and reverse-conducting WR5

Currently, due to increasing labor costs, more manufacturers are considering changing to automated assembly, so the demand for surface-mounted packages (SMD) is growing. However, a main issue of standard surface-mounted packages is that they are usually relatively small, and carry only limited amount of current, thus the power range for converters using SMD components is relatively low. Still, the ultra-thin TRENCHSTOP™ 5 IGBT technology from Infineon allows higher power density in a smaller chip size. Infineon's TRENCHSTOP™ 5 IGBT portfolio offers D²Pak devices optimized for high-frequency converters with switching frequency over 30 kHz [1], including the best-in-class, unique, highest-current density 40 A 650 V IGBT co-packed with 40 A diode in D²Pak, which have 30% higher current capacity than any other competitor on the market.

The new 40 A co-pack IGBT in D²Pak IKB40N65EH5 [2] enables replacement of the IGBT in through-hole packages, like TO-247. For instance, the 4 kW portable welding machine power supply based on half-bridge converter topology proposed in this document, is an example of replacement of a 40 A co-pack TO-247 IGBT with an SMD design solution using IKB40N65EH5 D²Pak IGBT, assembled on IMS. The new design using IGBT in D²Pak package on IMS demonstrates lower IGBT power losses and junction temperature (T_{vj}) during operation, increased power density, and reduced system size. Moreover, system reliability is increased due to lower turn-off collector-emitter voltage (V_{CE}) overshoot caused by the lower package's stray inductance. Also the extra cost for the IMS is balanced or improved by general bill-of-materials (BOM) reduction and lower assembly and labor costs.

1.1 Portable welding machines overview

In a few words, welding is the process of joining metals either by applying heat or pressure, or both heat and pressure at the same time. There are several welding methods, among them is arc welding, one of the most commonly used ones, mainly for portable welding machines. Arc welding is a fusion process in which two metals are heated to the melting point by an electric arc, and joined together. The electric arc is generated between the metal workpieces and electrode by using a direct (DC) or alternating (AC) high-current/low-voltage welding power supply. The arc-welding processes most commonly used are the manual metal arc (MMA), tungsten inert gas (TIG), and metal active gas (MAG) or metal inert gas (MIG). Each process has its own specific power supply requirements as depicted in Table 1.

Table 1 Power supply requirements for arc-welding processes [3]

Arc-welding process	Output current	Current range	Voltage range
Manual Metal Arc (MMA)	AC or DC	25 – 350 A	10 – 40 V
Tungsten Inert Gas (TIG)	AC or DC	10 – 300 A	
Metal Active/Inert Gas (MAG/MIG)	DC	60 – 500 A	

The power supply is the core of the arc welding machine. Besides the certain electrical performance requirements, the power supply element of the welding machine must be galvanically isolated from the main voltage supply for operator-safety reasons. This galvanic isolation is typically achieved by the use of a power transformer. The traditional welding machine power supply solution basically uses a voltage step-down transformer operating with the mains supply voltage at 50/60 Hz frequency, resulting in a large transformer size. The control of the required output current/voltage is normally done by linear mode or phase regulation. Such a welding machine solution is usually heavy-weight, bulky, and inefficient. It is difficult to carry around and to meet the applied efficiency regulations. Figure 2 shows typical examples of traditional welding machine topologies.

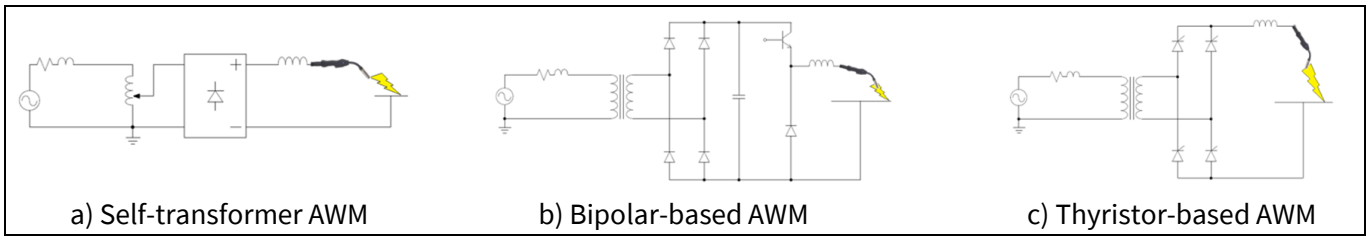

a) Self-transformer AWM b) Bipolar-based AWM c) Thyristor-based AWM

Figure 2 Traditional arc welding machine (AWM) topologies

Contrary to the traditional arc welding machine, the inverter welding machine is lightweight, small, and highly efficient. It also uses a voltage step-down transformer, and operates at a higher frequency, typically over 20 kHz, which in principle, allows considerable reductions in the transformer's size and weight. The required output current/voltage is controlled by using switching-mode regulation, which improves the welding machine's efficiency, and increases power density. Additionally, multi-functionality, easier and faster controls, and protection features can be implemented. Furthermore, due to smaller transformers, semiconductor power switches, and thermal system heatsinks, system costs can be reduced as well. In general, a typical inverter welding machine consists of an input bridge rectifier, a DC to AC inverter, a step-down transformer, and an output rectifier as shown in Figure 3.

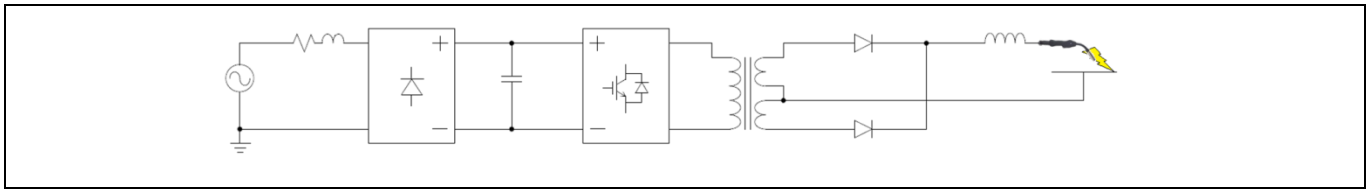

Figure 3 Typical inverter arc welding machine

There are some specific isolated DC-DC converter topologies commonly used for welding machines, including resonant topologies operating at soft-switching mode and hard-switching mode operation topologies. The most commonly used in portable welding machines are the hard-switching mode topologies due to their easy control scheme design regularly based on popular pulse-width modulator (PWM) controllers for switching mode power supplies (SMPS).

1.2 Converter topologies in the portable welding machines

The majority of portable welding machines use basic isolated DC-DC converter topologies such as two transistors forward (TTF), half-bridge (HB), and full-bridge (FB) illustrated in Figure 4. These converters are often controlled by common current-mode PWM controllers, and operate with zero current switching (ZCS) at turn-on and hard switching at turn-off. This enables high switching frequencies, improved efficiency, increased power density, and lower system costs.

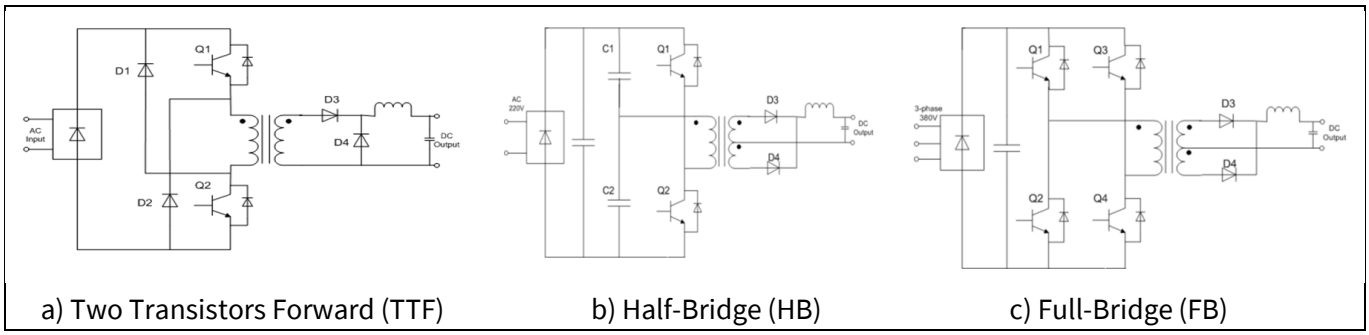

a) Two Transistors Forward (TTF) b) Half-Bridge (HB) c) Full-Bridge (FB)

Figure 4 Common isolated DC-DC converter topologies used in portable welding machines

Usually, for portable welding machines, the TTF converter topology is used up to 200 A and in some cases, with two-leg arrangements, up to 300 A output current requirements. The topology is well-known for its robustness and the simplicity of the control scheme. Also, no dead-time is needed, therefore, there are no issues due to shoot-through incidents. Even though it uses a relatively large inductor on the output filter, it is not the main downside of the topology. The inefficient use of the transformer, where the maximum duty cycle is regularly less than 50%, results in large transformer converters.

The HB converter topology is used at up to 250 A output current requirements. The topology is very robust, its control scheme is simple, and the transformer use is efficient. So smaller size transformers can be used, and the switching frequency is double at the output filter resulting in smaller size inductor. However, the topology needs two large size capacitors for the half-bridge capacitor divider, which increases the system cost. Still, perhaps the more significant drawback is that the amplitude voltage of the transformer's windings is half of the input voltage, reducing the output power capacity level of the converter.

The FB converter topology is used for welding machines above 250 A output current requirements. Its general characteristics are similar to the HB converter topology, i.e. high robustness, simple control scheme, relatively small size transformers and output filter inductors. However, on this converter, the total input voltage is applied to the transformer winding, so the output power delivery is two times higher compared to HB converters for the same semiconductor power switch size and/or current rating. The obvious downside for this

converter is the necessity for additional components such as semiconductor power switches, gate drivers, as well as larger heatsinks, which translates into bigger systems, higher BOM costs, and a more complicated system design.

In summary, the selection of any specific isolated DC-DC converter topology is based mainly on target parameters such as the arc-welding process type, output power requirements, i.e. output current/voltage, and maximum welding operation's duty cycle, design complexity, system size and weight, and final cost.

1.3 Power semiconductor switches for portable welding machines

The power semiconductor devices required for the typical inverter welding machine, see Figure 4, are the power switches used in the converter and the input and output voltage rectifiers. With regard to the converter, the selection of the optimal device should be based on its electrical performance at specific application conditions. For the three basic converter topologies used, TTF, HB and FB, the typical operating conditions for the power switch are very similar. At turn-on, the switching is performed at ZCS and turn-off occurs at hard-switching conditions as shown in Figure 5. Hence, the turn-on switching losses are negligible, so the optimal power switch should have low on-state voltage and turn-off switching losses.

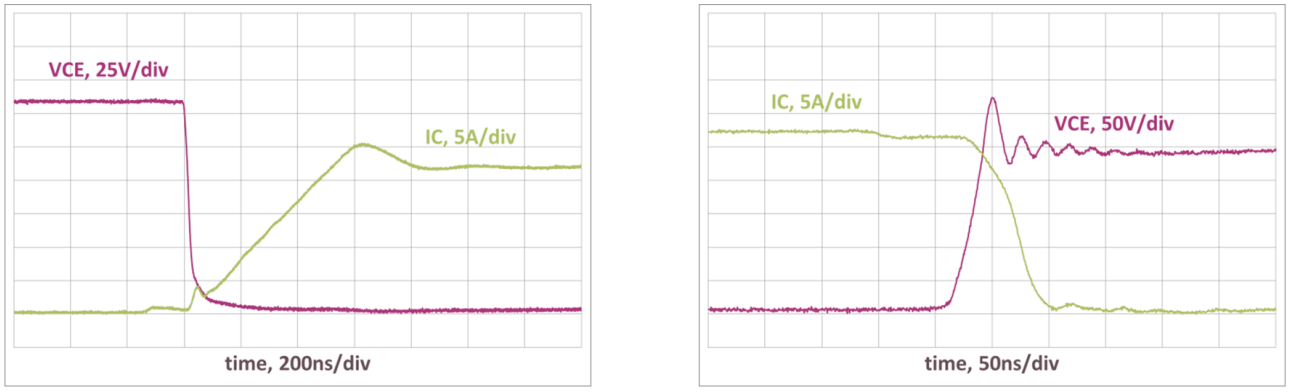

a) Turn-on at zero current switching ZCS b) Turn-off at hard switching

Figure 5 Typical switching performance in portable welding machine power supply converter

Because of these electrical performance requirements, power IGBTs and MOSFETs are frequently used as power switches in the converter. However, for requirements above 150 A output current, the IGBT is the preferred power switch device, specifically IGBTs co-packed with anti-parallel diodes, so called co-packs. The lower on-state voltage of IGBTs at high-current levels when compared to MOSFETs results in lower conduction power losses. Furthermore, contrary to the typical IGBT's turn-off switching performance characteristic, Infineon's TRENCHSTOP™ 5 IGBT technology shows non turn-off "tail" current, resulting in very low switching power losses as well [4]. The anti-parallel diode acts as a freewheeling diode (FWD) for the transformer's demagnetizing current and for the energy stored in the leakage inductance. The FWD's current is relatively minor, as shown in Figure 6, thus small current rating diodes can be used. In short, an IGBT co-packed with a relatively small diode is the optimal device for portable welding machines.

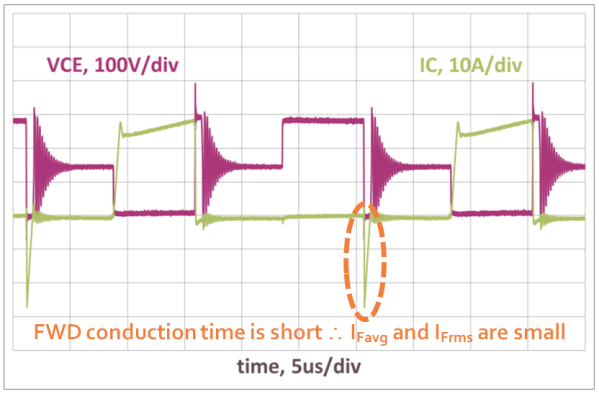

Figure 6 Typical freewheeling diode (FWD) conduction time in portable welding machine converter

An example of an optimal IGBT for portable welding machines is the best-in-class and unique TRENCHSTOP™ 5 IKB40N65EH5 IGBT. It is a 40 A co-pack 650 V IGBT in D²PAK package, optimized for high-frequency converters with switching frequency over 30 kHz. This co-pack IGBT enables the user to take advantage of the SMD package features to improve the performance and cost of the typical portable welding machines using TO-247 package IGBTs. These benefits are demonstrated in a 4 kW welding machine power supply design based on half-bridge converter topology. Moreover, the design proposes an assembly of D²PAK IGBT on an insulated metal substrate with all IGBTs of the converter mounted on a single electrically isolated heatsink. This results in a more compact system solution with smaller dimensions and weight, and reduced stray inductance.

Table 2 TRENCHSTOP™ 5 IKB40N65EH5 IGBT co-pack, key performance and package parameters

Type	V_{CE}	I_C	V_{CEsat}, T_{vj} = 25°C	T_{vjmax}	Marking	Package
IKB40N65EH5	650 V	40 A	1.65 V	175°C	K40EEH5	PG-TO263-3

2 Welding machine power supply using SMD-on-IMS solution

The objective of the presented portable welding machine power supply is to demonstrate the benefits of a solution using IGBTs in SMD packages, assembled on IMS. Such benefits improve the converter's performance with lower IGBT power losses and junction temperature during operation, increased power density and reduced system size. Also, the lower stray inductance of the SMD package reduces turn-off V_{CE} voltage overshoot, and thus reduces the stress on the IGBT, and increases its expected lifetime and reliability. The extra cost for the IMS is partially balanced by the reduction of the system's size, the lack of need for isolation foil, and faster assembly time, which translates into lower assembly and labor costs. Additionally, as stated in [4], use of fast speed TRENCHSTOP™ 5 IKB40N65EH5 IGBT in D²Pak package enhances the benefits of IGBTs in SMD packages, assembled on IMS substrate solution. Therefore, in the following sections, the main discussion will be concentrated on this welding machine power supply converter using an SMD-on-IMS solution.

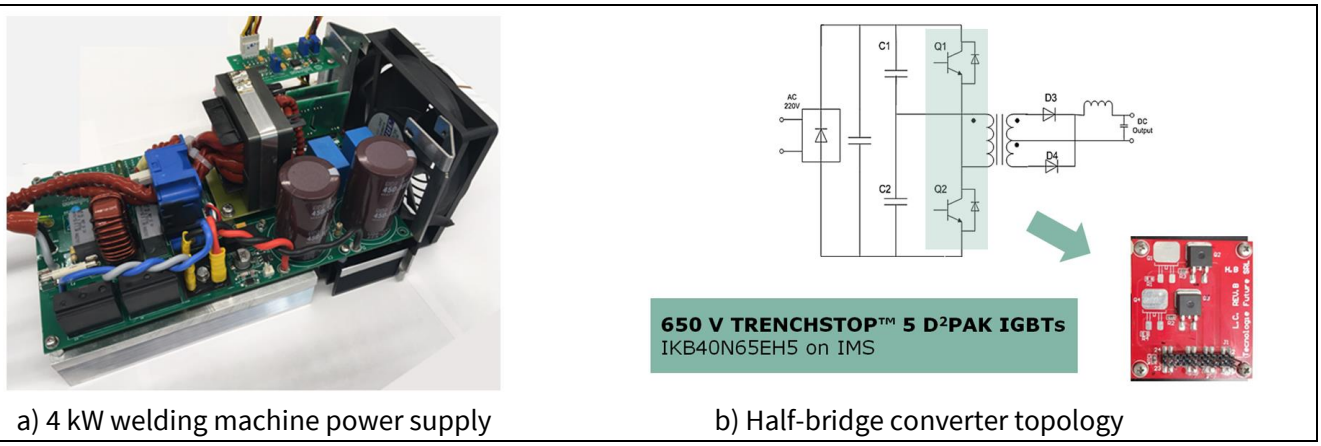

a) 4 kW welding machine power supply b) Half-bridge converter topology

Figure 7 Welding machine power supply based on half-bridge converter using SMD-on-IMS solution

The following Table 3 shows the specifications of the designed welding machine power supply using an SMD-on-IMS solution in the converter:

Table 3 Specifications of the welding machine power supply

Parameter	Value
Input supply voltage	1 phase, AC220 V ±15%, 50/60 Hz
Input power	7.4 kVA
Output current / voltage	160 A_{DC} / 26 V_{DC}
Duty cycle (10 min, 40°C ambient)	60%, 160 A_{DC}
Open circuit voltage	40 V
Efficiency	80%
PF	0.70
Switching frequency	20 to 40 kHz
Operating ambient temperature range	–10 to +40°C
Dimensions (L x W x H)	230 x 135 x 140 mm3
Weight	3.5 kg

The welding machine power supply, depicted in Figure 7, is based on half-bridge converter topology using IKB40N65EH5 IGBTs in D²Pak package mounted on IMS. It follows the recommendations for using TRENCHSTOP™ 5 IGBT with a very good PCB layout for the high-switching frequencies targeted. Figure 8 shows

a welding machine design with power converter IGBTs in a D²Pak package assembled on IMS in comparison to a mainstream design using IGBTs in a through-hole TO-247 package.

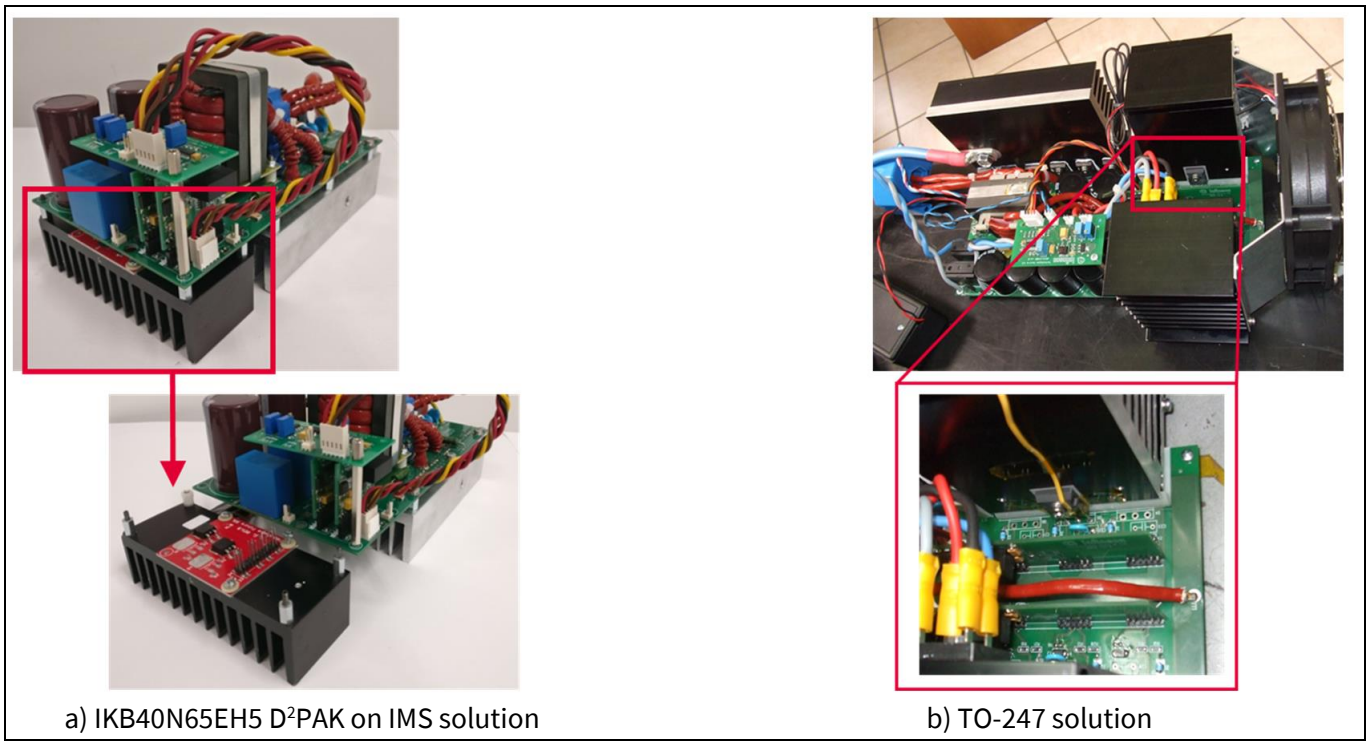

a) IKB40N65EH5 D²PAK on IMS solution b) TO-247 solution

Figure 8 Welding machine power supply using D²PAK on IMS vs. typical TO-247 solution

Because the welding machine's duty cycle, reliability and overall lifetime expectancy depends significantly on the thermal performance of the power switches in the main converter, the proper design of the IMS assembly, including heatsink, is crucial. Fortunately, IMS is a mature technology with multiple manufacturers proposing their solutions together with much support information and detailed technical specifications.

2.1 Insulated metal substrate (IMS) technology

Surface-mount assembly on IMS is a well-known assembly technique that offers multiple advantages compared to typical PCB assembly. Such advantages are flexibility for the circuit layout design, higher thermal conductivity, which benefits lower operating temperatures of mounted components, and higher current capacity. Additionally, IMS is electrically isolated, which allows fast and easy mounting directly on a heatsink. Due to its good thermal conductivity and proven robustness and competitive cost, IMS is often preferred over ceramic substrates such as DBC.

An IMS is a stacked "sandwich" piece made of two metallic layers separated by electrical insulation material, as shown in Figure 9. The bottom layer is a metal base plate, typically aluminum or copper material, and on top a copper foil layer for circuit connections, separated by a polymer-ceramic compound layer with very good thermal conductivity that electrically insulates the metallic layers [5].

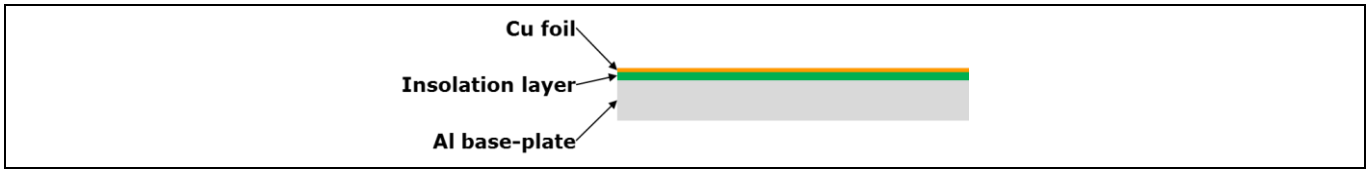

Figure 9 Typical insulated metal substrate (IMS)

There are several manufacturers offering IMS technology with a large range of X-Y dimensions, layer materials and thickness specifications to meet every application's electrical, thermal, mechanical, reliability, and cost requirements. For example, copper foil thickness from 18 µm (0.5 oz/ft^2) to 350 µm (10 oz/ft^2), different dielectric insulation materials from 76 µm to 229 µm thickness, and aluminum or copper metal base layer from 0.50 mm to 4.83 mm thickness [6, 7]. Selection of the right material and thickness for each layer is of key importance for the best performance of the IMS. The right selection enables optimization of thermal performance and compliance with the applied requirements for electrical isolation strength, current capacity, mechanical design and reliability.

2.2 Selecting the right IMS for the application

Most IMS manufacturers have specific recommendations and guidelines for specific material selections defined by the requirements of the target application. Key parameters like copper foil thickness, dielectric thermal performance and thickness, and the metal base substrate characteristics are recommended, based on current capacity, maximum temperature and electrical isolation requirements.

Another key factor considered by IMS manufacturers when selecting the right IMS materials is related to the coefficient of linear thermal expansion (CTE) of each layer material. Briefly, the CTE is a reference value that specifies the expansion or contraction of the material as a function of heat [8]. Large CTE differences among the IMS layer materials can have a significant impact on the reliability, as this can lead to considerable mechanical stress causing cracks or fractures in the bonds of the IMS layers and the attached components.

It is very important to follow the IMS manufacturer's guidelines for proper material selection. Otherwise, incorrect IMS design could have a severe impact on overall thermal performance of the system's design affecting proper power loss estimation, heatsink size definition, cooling method, etc.

2.2.1 Copper foil thickness definition

The copper foil thickness is based mainly on the maximum current requirement defined by the application and the maximum temperature capability of the IMS polymer-ceramic compound layer. Similar to the typical PCB copper track thickness selection, the requirements for maximum current, maximum ambient temperature (T_{amb}) and maximum rise temperature (T_{RISE}) need to be defined to select the right copper thickness. This means that the heat generated by the resistive losses of the copper foil material ($P=RI^2$) need to be considered. However, the significantly higher heat dissipation capability of IMS allows a higher current capacity for the same copper thickness when compared to the typical PCB.

For example, an IMS manufacturer's guidelines [9] propose the following equation to calculate the minimum copper track width for IMS:

$$W_C = \left[\frac{T_S \times I^2 \times R_S}{K_S \times T_{RISE}} + {T_S}^2\right]^{1/2} - T_S$$

Where W_C = conductor width (m), T_S = dielectric thickness (m), I = current (A), K_S = thermal conductivity of the dielectric (W/m-K), T_{RISE} = temperature rise (K), parameter mainly defined by the maximum temperature capability of the dielectric insulation material, circuit resistivity $R_S = 1.78 \times 10^{-8} \div T_C$ (Ω), and T_C = foil thickness (m).

Remember that increasing the copper foil thickness increases heat dissipation. Therefore allowing more than the minimum required thickness will improve the thermal performance of the mounted device.

2.2.2 Dielectric insulation material selection

The selection of dielectric insulation material, specifically the polymer-ceramic compound layer, is based on the electrical isolation, thermal resistance, and reliability requirements. IMS manufacturers offer a wide range of polymer material thickness. Even a small material thickness will provide a high dielectric isolation, typically over 5 kVAC. One of the main advantages of IMS is the ceramic proportion introduced in the dielectric layer. Because ceramic has high thermal conductivity, the ceramic proportion considerably improves the thermal performance of the dielectric layer. Therefore, overall thermal resistance of IMS is significantly lower, about up to 5 times lower, than, for example, a typical FR4 PCB [6].

Lastly, for reliability requirements, a very important aspect to consider is the glass transition temperature (T_g) of the dielectric layer. In brief, T_g temperature is the temperature point at which the dielectric changes from a hard, rigid, glassy state to a soft, flexible, rubbery state. Except for a few differing opinions [10], it is recommended not to exceed the T_g temperature to guarantee the mechanical stability of the polymer-ceramic compound layer.

Therefore, the right selection of dielectric isolation material involves the correct definition of key application requirements, i.e. electrical isolation, thermal resistance, and reliability requirements, and the proper dielectric insulation material specifications meeting such requirements.

2.2.3 Metal base plate selection

The metal base plate material and thickness selection is based on thermal and mechanical requirements, as well as on reliability and cost. Generally, copper and aluminum alloys are the most commonly used materials, but additional special materials, such as stainless steel, are available for special application requirements as well. Copper material has very good thermal spreading and lower CTE characteristics, and furthermore, better reliability considering there are no CTE mismatch issues with copper foil layer. But copper is more expensive compared to aluminum, whose performance is still good in terms of the characteristics mentioned. The thickness selection is based on the mechanical requirements (such as hole size, dimension, shape, etc.), stiffness, thermal mass, and cost requirements [10]. Therefore, aluminum is the most commonly used metal base plate material due to the better trade-off of thermal performance, cost, and reliability. Finally, a general rule of thumb, cited in [10], recommends that copper foil thickness should not exceed 10% of the aluminum base plate thickness in order to avoid reliability issues.

In conclusion, most of the IMS manufacturers have specific guidelines and material selection for their products based on the target application requirements, offering a large selection of materials, thicknesses, and sizes as standards products. It is essential to follow these guidelines for the proper selection of IMS layer material selection.

2.3 Thermal system design of converter

The proper selection of IMS materials requires knowledge of the thermal spreading requirements related to maximum power losses in the converter, which are estimated using the following requirements:

- V_{BUS} = 311 V
- IGBT collector current I_C = 37 A_{pk}
- IGBT gate resistance R_G = 22 Ω
- Maximum PWM duty cycle D = 35%
- Maximum switching frequency f_{sw} = 40 kHz
- Maximum power switch junction temperature T_{vj} = + 150°C
- Maximum ambient temperature T_{amb} = +40°C

- Steady state operation to cover 60% of the welding duty cycle requirement at maximum output power rating. The welding duty cycle refers to the maximum operation time at rated output in a ten-minute period. When the duty cycle is exceeded, normally the welding machine should be shut down to avoid damages caused by components' overheating [11].

A simple and accurate estimation of single IGBT power losses in the converter can be done as follows:

$$P_{IGBT\ CONDUCTION\ LOSSES} = V_{CE(sat)} \times I_C \times D$$

and;

$$P_{IGBT\ SWITCHING\ LOSSES} = E_{OFF} \times f_{SW}$$

Where $V_{CE(sat)}$ and E_{OFF} maximum values at T_{vj} = 150°C should be used, as specified in converter's requirements. Note that the maximum values of these parameters are not usually specified in IGBT datasheets, however, as a safety margin, it is suggested to use for the $V_{CE(sat)}$ parameter the typical-to-maximum value ratio at T_{vj} = 25°C normally specified in IGBT datasheets, and for the E_{OFF} parameter, an additional 30% (1.3 factor) from the specified datasheet's typical value. This means for IKB40N65EH5, $V_{CE(sat)\ max}$ = 2.34 V and $E_{OFF\ max}$ = 591.2 µJ at 37 A at T_{vj} = 150°C. Also, for simplicity purposes, note that the IGBT's gate power losses are not considered, as they are minor compared to conduction and switching power losses.

Lastly, the total power losses of the converter, considering that two IGBTs are used (one per leg), and assuming a 20% additional factor due to the diode's V_F and E_{rr} power losses, are as follows:

$$P_{TOTAL\ LOSSES} = 2 \times [(P_{IGBT\ CONDUCTION\ LOSSES} + P_{IGBT\ SWITCHING\ LOSSES}) \times 1.2]$$

So, the estimated maximum total power losses of the converter due to the power switches are 125.2 W.

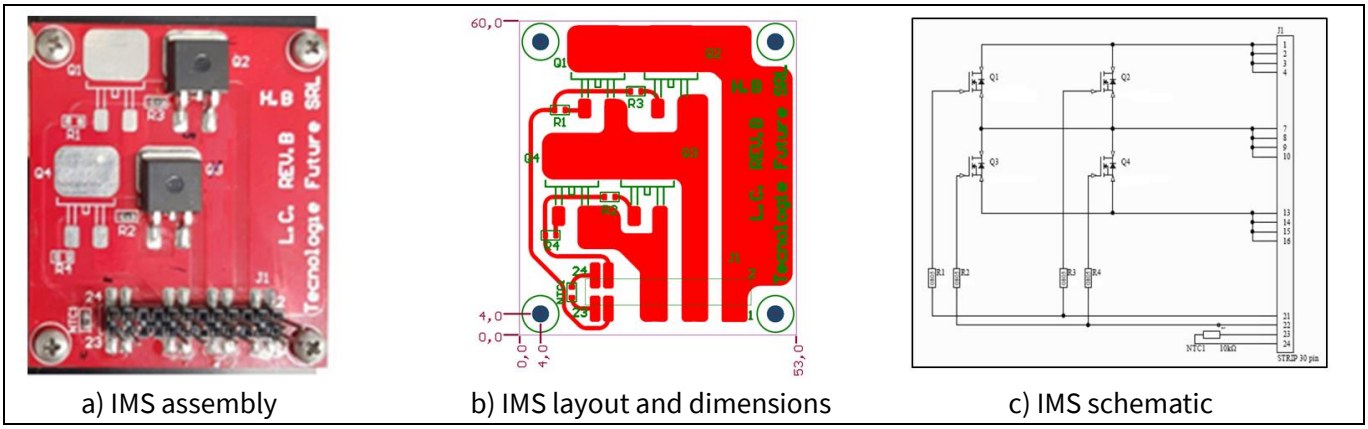

a) IMS assembly b) IMS layout and dimensions c) IMS schematic

Figure 10 Converter's IMS layout and X-Y dimensions (in mm)

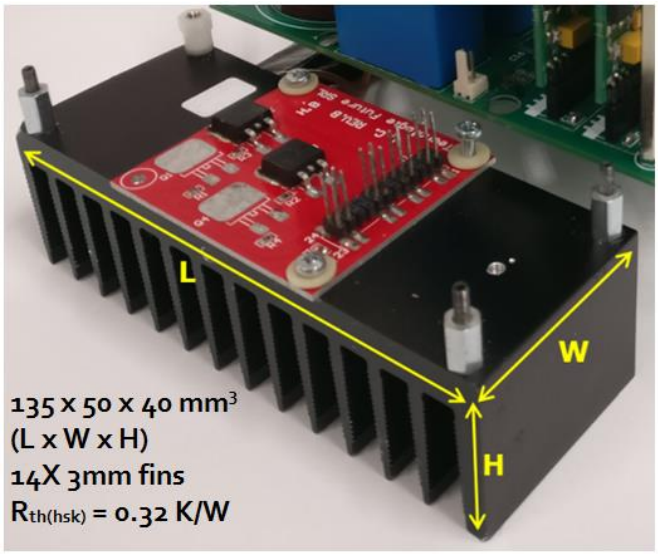

Figure 11 Converter's heatsink design. $R_{th(hsk)}$ = 0.32 K/W, forced convection cooling

In order to meet the mechanical space requirements, the IMS and heatsink dimensions have been specified as well. Figure 10 shows the IMS layout and dimensions, and Figure 11 the heatsink design. Based on this information, the required thermal resistance of the IMS is defined. First, the maximum heatsink temperature is estimated as follows:

$$T_{hsk\ max} = P_{TOTAL\ LOSSES} \times R_{th\ HSK} + T_{amb}$$

Where, $P_{TOTAL\ LOSSES}$ = 125.2 W, as previously defined, heatsink thermal resistance $R_{th\ HSK}$ = 0.32 °C/W, and from the converter's requirements, T_{amb} = 40°C.

Therefore, the maximum heatsink temperature is 80.1°C. Now, the IMS thermal resistance required is estimated by using following maximum IGBT junction temperature equation:

$$T_{vj\ IGBT\ max} = P_{IGBT\ TOTAL\ LOSSES} \times \left[R_{th(j-c)\ IGBT\ max} + R_{th\ IMS} + R_{th\ grease}\right] + T_{hsk\ max}$$

Where, $T_{vj\ IGBT\ max}$ = 150°C from converter's requirements, and from datasheet [2], IKB40N65EH5 IGBT is $R_{th(j\text{-}c)\ IGBT\ max}$ = 0.60 °C/W, and thermal grease $R_{th\ grease}$ = 0.10 °C/W, with a conservative assumption for the thermal grease layer of 100 µm thickness, λ ≥ 0.5 W/mK, and the IMS dimensions.

Finally, the IMS glass transition temperature is estimated based on a maximum IGBT case temperature as follows:

$$T_{g\ IMS} > T_{case\ IGBT\ max}$$

And,

$$T_{case\ IGBT\ max} = T_{vj\ IGBT\ max} - P_{IGBT\ TOTAL\ LOSSES} \times R_{th(j-c)\ IGBT\ max}$$

Therefore, for the IMS thermal characteristics, the thermal resistance required should be $R_{th\ IMS}$ ≤ 0.64 °C/W and the glass transition temperature should exceed $T_{case\ IGBT\ max}$, which means $T_{g\ IMS}$ > 118.7°C.

2.4 Converter's IMS selection

To select the proper IMS, the following requirements should be met:

- The copper track must be capable of handling the maximum IGBT current
- Dielectric withstand capability of ≥ 2.5 kVrms per 60 s

- Thermal resistance, $R_{th\ IMS} \leq 0.57$ °C/W
- Glass transition temperature, $T_{g\ IMS} > 117.6$°C

Obviously, it is very important to meet the IMS requirements at the lowest cost possible. Therefore, based on these requirements, an aluminum base copper-clad IMS product has been selected, part number AL-01-B-20 with 3 oz/ft² copper foil layer, 100 um dielectric layer thickness, and 1.6 mm aluminum base thickness. Table 4 shows aluminum base copper- clad product AL-01-B-20 specifications [12]:

Table 4 Specifications of the aluminum base copper- clad product AL-01-B-20

Parameter	Test Conditions	Unit	Value
Thermal conductivity	ASTM D5470	W/m-K	2.0
Thermal resistance	ASTM D5470	°C/W	0.55
Thermal stress	288°C, solder dipping	s	120
Peel strength	IPC-TM-650, 2.4.8	N/mm	1.5
Volume resistivity	IPC-TM-650, 2.5.17	MΩ-cm	108
Surface resistivity	IPC-TM-650, 2.5.17	MΩ-cm	107
Dielectric constant	IPC-TM-650, 2.5.5.3, 1MHz	-	4.9
Dissipation factor	IPC-TM-650, 2.5.5.3, 1MHz	-	≤ 0.02
Breakdown voltage	ASTM D149	kV DC	3
Flammability	UL94	class	V-0
CTI	IEC60112	V	600
TG	DSC	°C	130
Halogen	Cl, Br	ppm	≤ 900
	Cl, +Br	ppm	≤ 1500

As Table 4 shows, the IMS selected meets all the specified requirements. Now the next step is to define the reflow profile for a proper assembly of the IKB40N65EH5 D²Pak IGBT on the IMS.

2.5 TRENCHSTOP™ 5 D²PAK IGBTs on IMS assembly guidelines

With regard to D²Pak assembly, Infineon has released several guidelines for different packages. The guidelines address not only the package assembly, but also topics concerning the product's transportation, storage, handling, and processing. The D²Pak assembly recommendations are explained in [13, 14]. The main factors for obtaining the best assembly quality are listed and explained, such as PCB design, footprint and stencil layout. Also included are the formulation, application and inspection of soldering paste, component placement, and the reflow soldering process. All these recommendations are applicable for D²Pak on IMS assembly as well. However, additional attention should be paid to the definition of the reflow profile due to the larger thermal mass of the IMS compared to typical FR4 PCB. Because of this, and following Infineon and solder paste manufacturer recommendations, a comprehensive study has been performed to identify the optimal reflow profile to assembly IKB40N65EH5 D²Pak IGBT on the designed IMS for this specific welding machine power supply converter. The selected reflow profile using Koki S3X48-M500 solder paste [15] is illustrated in Figure 12.

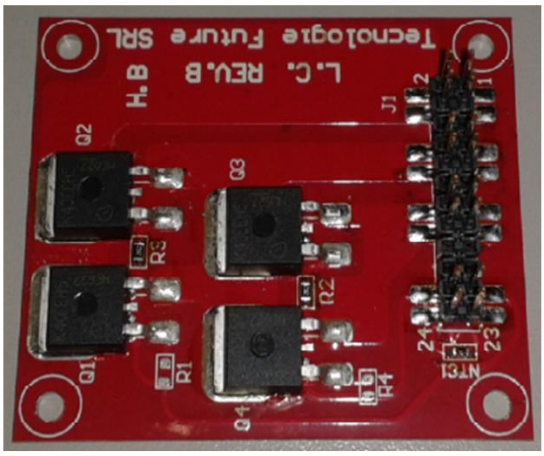

a) Assembly sample for reflow profile optimization

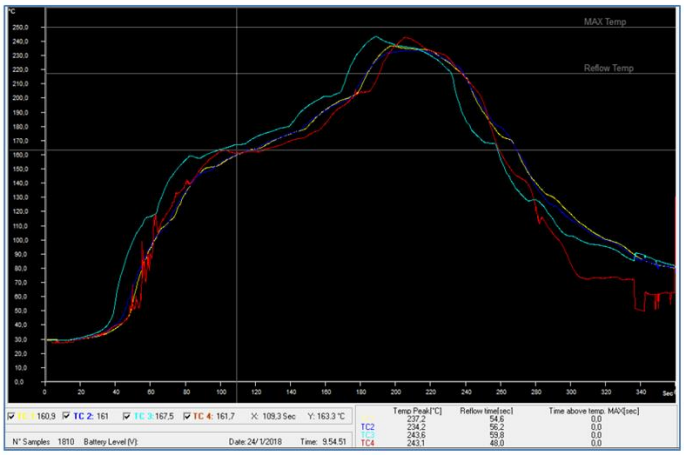

b) Final reflow profile (D²Pak solder joint temperatures)

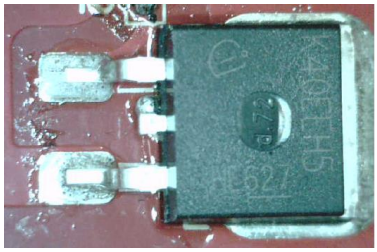

c) IMS layout and dimensions

Figure 12 Reflow profile used for TRENCHSTOP™ 5 IKB40N65EH5 D²Pak IGBT on designed IMS

The selected reflow profile parameters with 150 µm of Koki S3X48-M500 soldering paste thickness are defined as follows:

- Ramp up = 1 - 3 °C/s
- Preheating time = 90 s
- Reflow time = 55 s
- Ramp down = 2 - 4 °C/s
- Peak temperature = 244°C

In addition, after reflow processing and as per inspection standards, the assembly shows proper joints and wetted leads as illustrated in Figure 12 as well.

3 Welding machine improvement with SMD on IMS

The test results confirmed the benefits of the proposed solution using IKB40N65EH5 D²Pak IGBT, assembled on IMS for the welding machine power supply converter. This solution improves the performance of the power converter with lower IGBT power losses and junction temperature as well as lower turn-off V_{CE} voltage overshoot during operation, when compared with a typical TO-247 solution.

The evaluation measurements were done with both the D²Pak SMD-on-IMS solution and the TO-247 solution using the same welding machine power supply shown in Figure 7. To have a fair comparison, the IKW40N65H5 TO-247 device with the same TRENCHSTOP™ 5 IGBT die of IKB40N65EH5 D²Pak device was used. Figure 13 depicts the TO-247 device's assembly using Sil-Pad material as the thermal interface material (TIM), and mounted on the same heatsink used for D²Pak on IMS solution.

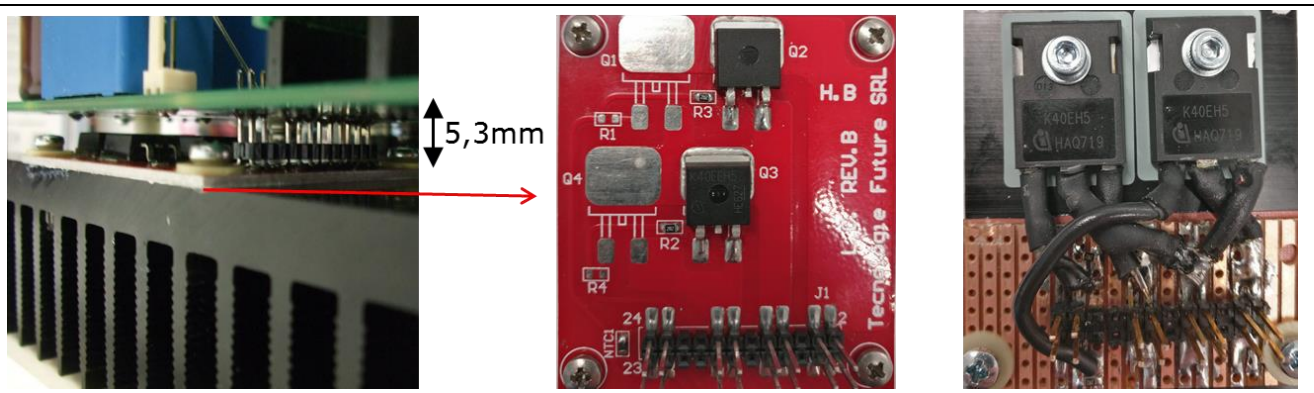

a) Assembly's detail of devices under test b) TO-247 solution assembly

Figure 13 Test setup for SMD-on-IMS solution and TO-247 solution using 40 A IGBT TRENCHSTOP™ 5

Furthermore, the gate resistance R_G is set to keep turn-off V_{CE} voltage overshoot within 80% of the rated 650 V V_{CE}, i.e. maximum peak turn-off V_{CE} = 520V. As described in [4], smaller circuit board stray inductance resulted in smaller R_G and therefore, smaller switching losses. However, in this case, the difference is mainly due to the IGBT package, and because TO-247 has larger package stray inductance than D²Pak, the R_G value is set based on the TO-247 solution.

Figure 14 shows the body case's temperature profiles for the two different solutions under the following welding machine power supply's test conditions:

- Input voltage = 230 V_{RMS}
- Output power = 160A_{DC} / 26 V_{DC}
- R_G ON/OFF = 22 Ω
- Switching frequency f_{sw} = 35 kHz
- Test time = 60% duty Cycle = 6 min ON / 4 min OFF
- T_{amb} = room temperature

Temperature profiles show the improved performance of the proposed SMD-on-IMS solution over the TO-247 solution.

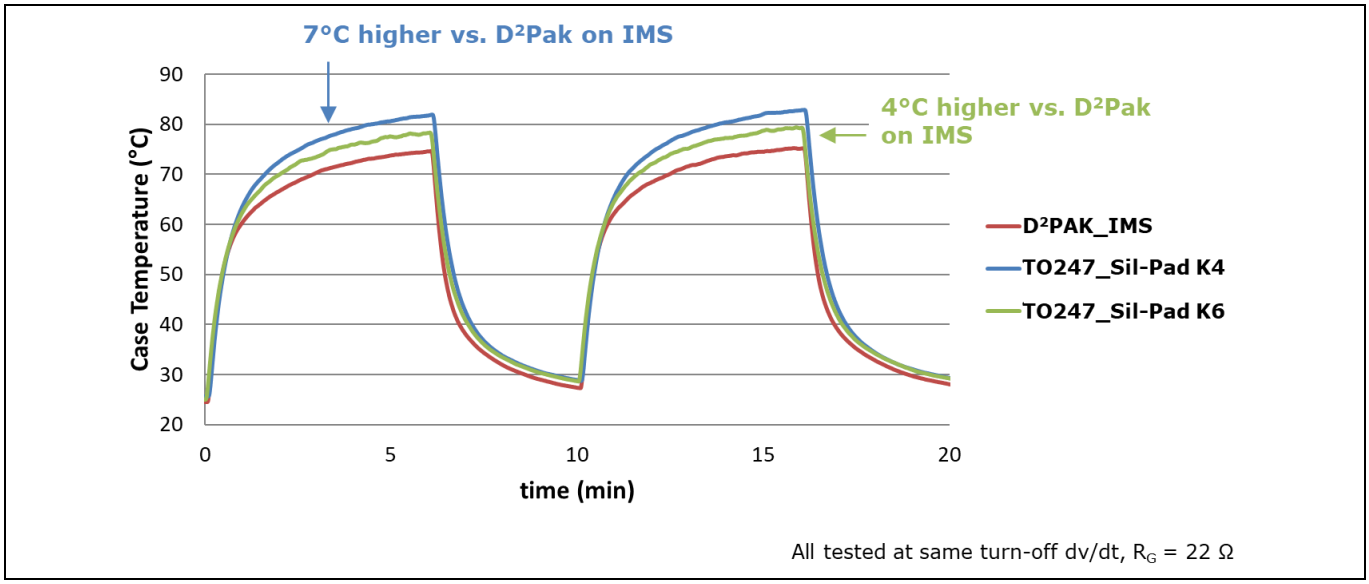

Figure 14 Temperature profiles (body case) of D²Pak on IMS solution vs. TO-247 solution

Moreover, Figure 15 also depicts the improved turn-off V_{CE} voltage overshoot performance of the proposed SMD-on-IMS solution as compared to the TO-247 solution.

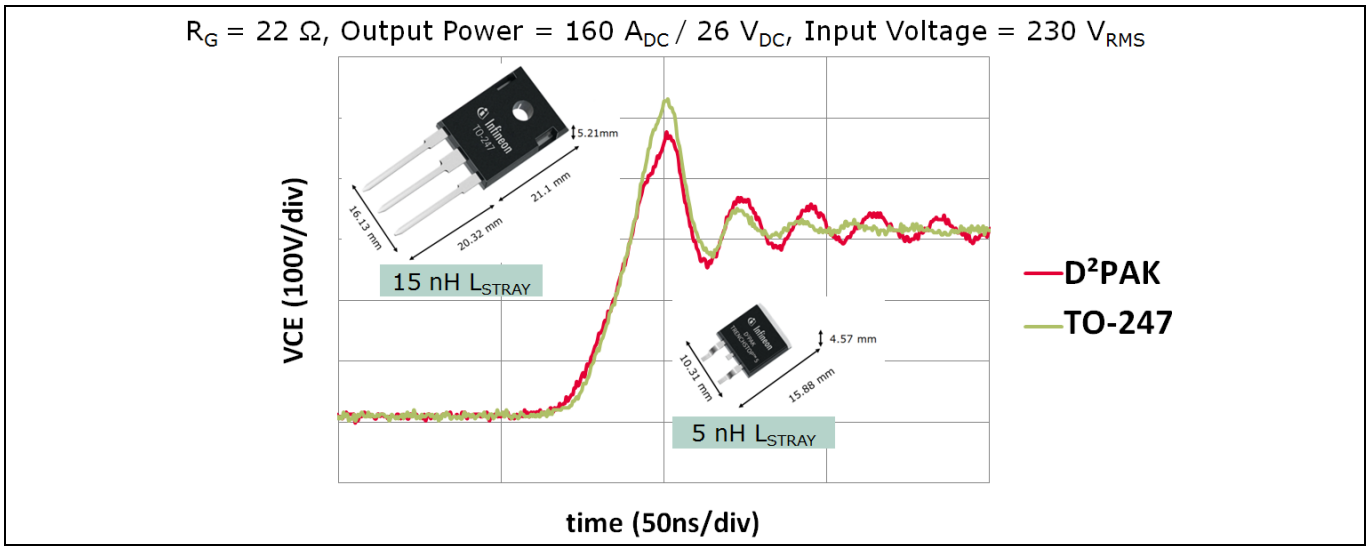

Figure 15 Turn-off V_{CE} performance of proposed D²Pak on IMS solution vs. TO-247 solution

The proposed SMD-on-IMS solution has a confirmed improved performance resulting in increased power density and reliability. The improvements of the SMD-on-IMS solution have led to smaller system size and lower cost, with smaller circuit boards and heatsinks. Furthermore, these improvements are significantly enhanced with the use of fast-speed TRENCHSTOP™ 5 IGBT technology [4]. In addition, all the well-known advantages of using the SMD package for cost reduction apply, such as a faster assembly process and fewer hardware components, better quality control and automation capability. Also, no thermal interface material is needed, so we can emphasize that the additional cost of the IMS is balanced or even improved by the reduction of the general BOM, and lower assembly and labor costs.

4 Conclusion and future work

Portable welding machines are a very competitive application, where the performance and low cost of electronic components are of fundamental importance for manufacturers. To respond to these requirements, Infineon developed and released TRENCHSTOP™ 5 IGBT technology with low $V_{CE(sat)}$ and E_{OFF} parameters, optimizing the performance of hard-switching topologies for welding machines, where low conduction and turn-off losses are required. The TRENCHSTOP™ 5 IGBT is an excellent technology for portable welding machines, and provides not only high efficiency, but also allows for higher switching frequencies, reducing the size of magnetic components and the number of capacitors.

The recently released TRENCHSTOP™ 5 IGBT in surface-mounted D²Pak packages, optimized for switching frequencies over 30 kHz, perfectly complements the previously released portfolio of TRENCHSTOP™ 5 IGBT in through-hole TO-247 packages. The highlighted product in the new TRENCHSTOP™ 5 IGBT in the D²Pak portfolio is a 40 A, 650 V IGBT, co-packed with a 40 A diode, the best-in-class and unique, highest power density 650 V IGBT on the market in D²Pak package. The new TRENCHSTOP™ 5 IGBT in D²Pak package enables manufactures of portable welding machines to take advantage of the SMD package features to improve the performance and the cost of welding machine designs that typically use the TO-247 package IGBTs.

The proposed solution for portable welding machine uses a TRENCHSTOP™ 5 IKB40N65EH5 D²Pak IGBT assembled on an IMS as a demonstration design of a 4 kW power supply, based on half-bridge converter topology. Test results confirmed that the TRENCHSTOP™ 5 IGBT in D²Pak package on the IMS improves the efficiency of the power converter, delivers lower operating temperatures and reliable switching performance with lower turn-off voltage overshoot on IGBT. The system's design with SMD IGBTs provides not only improved electrical and thermal performance, but also reduces the system's size and weight, an important criterion for portable machines.

With regard to future work, a comprehensive and unconventional approach, taking into consideration power semiconductors, thermal management, PCB design and topologies, to name a few, is essential for improving welding machine designs. For instance, as a further step in relation to a thermal management subject, a well-known but not often used thermal design concept is under evaluation. With the purpose of increasing the heat dissipation, the IGBTs without any electrical isolation are directly mounted on the heatsink. This concept increases power density and enables higher output current with smaller current rating devices. Hence, a different mechanical design approach needs to be considered for the arrangement of the separated heatsinks with galvanic isolation. In addition, synchronous rectification for the output rectifier, PWM control schemes, and PFC topologies design options will be investigated.

5 Appendix - Welding machine power supply schematics

The following section shows the schematics of the 4 kW welding machine power supply, shown in Figure 7, with a converter designed with SMD-on-IMS solution.

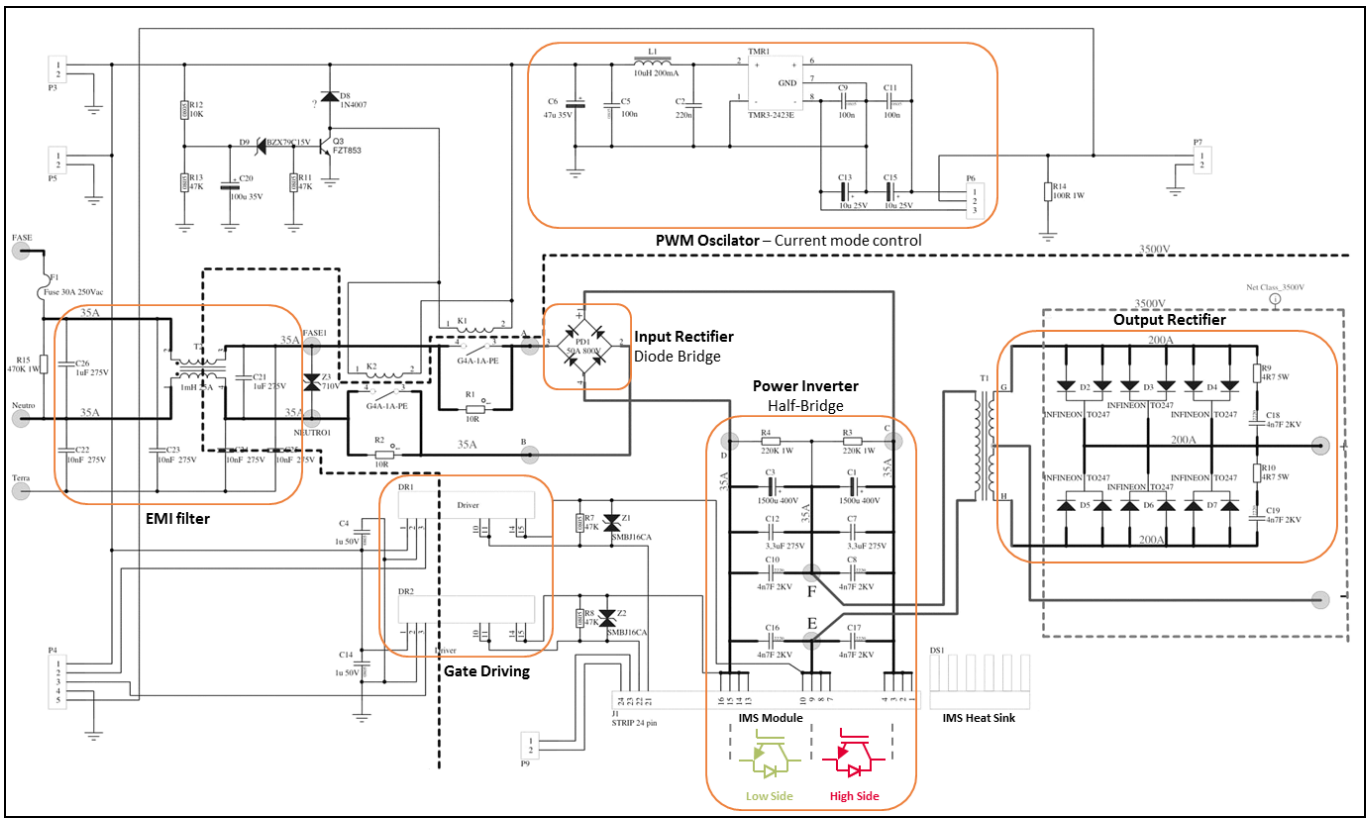

Figure 16 Power circuit schematic

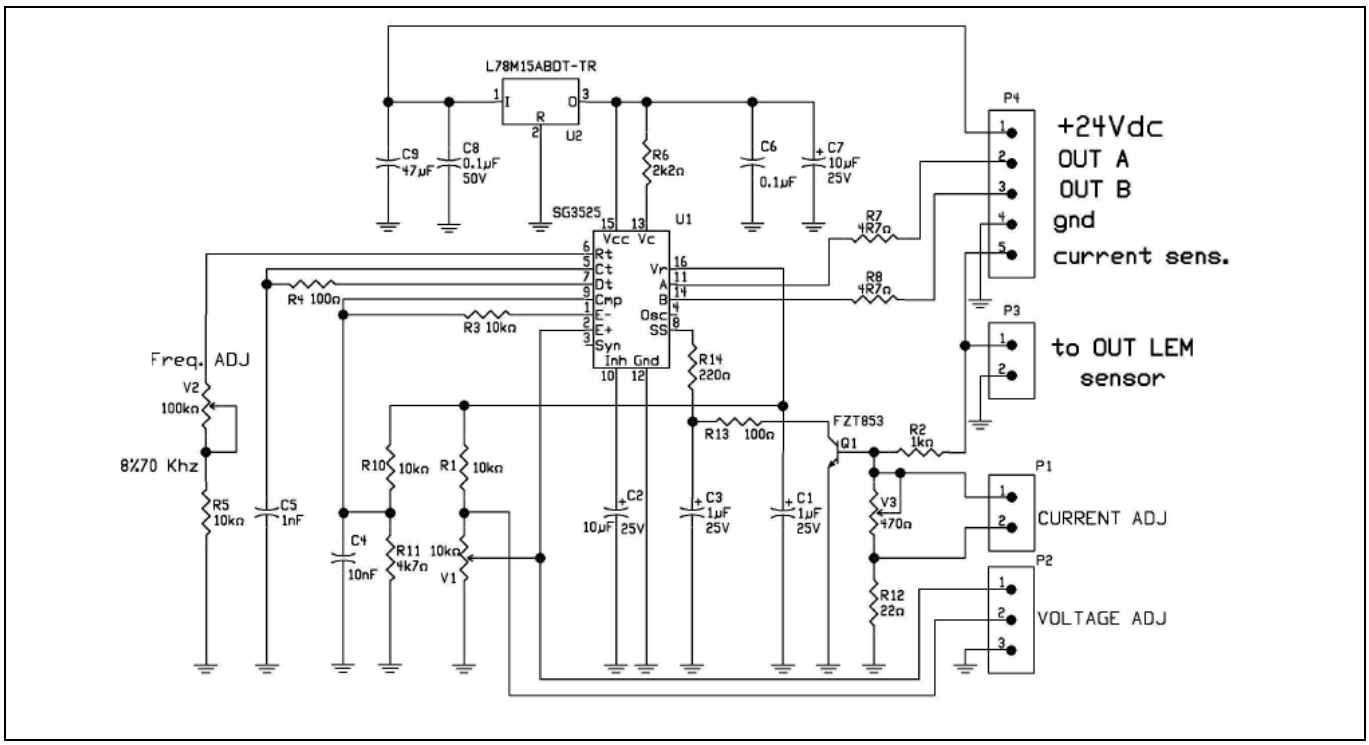

Figure 17 PWM controller circuit schematic

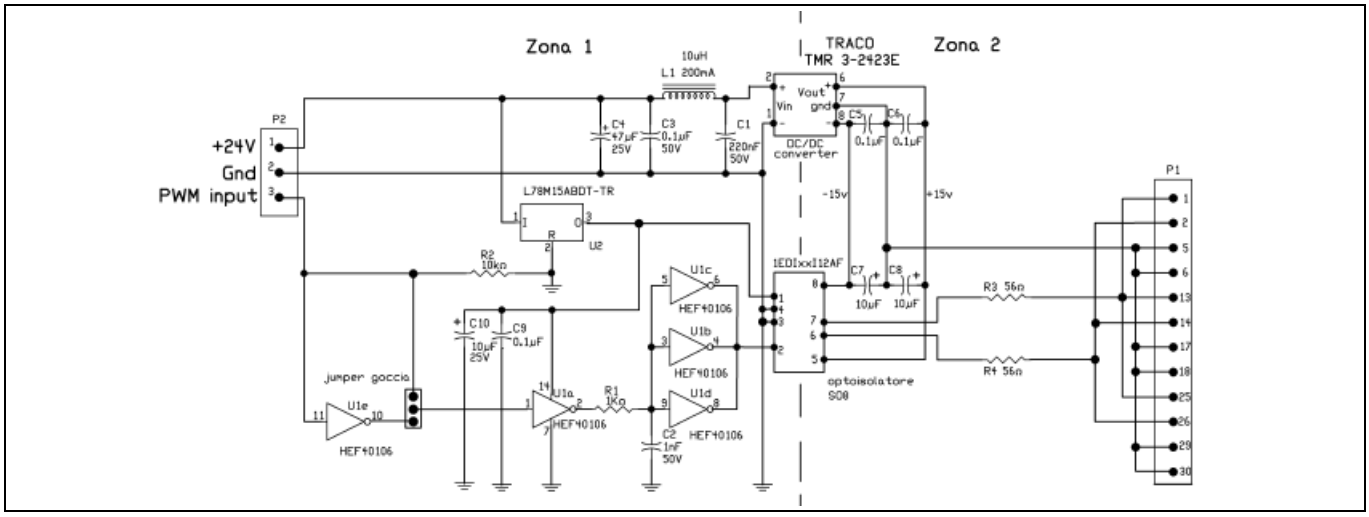

Figure 18 Gate driver circuit schematic

6 References

[1] 650V TRENCHSTOP™ 5 IGBT Technology, Infineon Technologies AG
https://www.infineon.com/cms/en/product/power/igbt/igbt-discretes/discrete-igbt-with-anti-parallel-diode/650v-trenchstop-5/

[2] IKB40N65EH5 D²Pak IGBT datasheet, Infineon Technologies AG
https://www.infineon.com/dgdl/Infineon-IKB40N65EH5-DS-v02_01-EN.pdf?fileId=5546d462625a528f0162a9221b17693f

[3] A. Bhatia. Fundamentals of Arc Welding, www.cedengineering.com
https://www.cedengineering.com/courses/fundamentals-of-arc-welding

[4] Brucchi F. and Zheng F. Design Considerations to Increase Power Density in Welding Machines Converters Using TRENCHSTOP™ 5 IGBT. PCIM Europe 2014, 20-22 May 2014, Nuremberg, Germany

[5] X. Jordà, X. Perpiñà, M. Vellvehi, F. Madrid, D. Flores, S. Hidalgo, J. Millán. Low-cost and versatile thermal test chip for power assemblies assessment and thermometric calibration purposes, Applied Thermal Engineering (2011), doi: 10.1016/j.applthermaleng.2011.02.008

[6] The Würth Elektronik Group, www.we-online.de

[7] Henkel Electronics Materials, LLC, www.bergquistcompany.com

[8] Thermal Properties of Metals (#06702G), ASM International, www.asminternational.org

[9] Selecting A Circuit Layer, Bergquist Company
https://www.bergquistcompany.com/pdfs/selectorGuides/Selecting_A_Circuit_Layer.pdf

[10] D. Sommervold, C. Parker, S. Taylor, G. Wexler. Optimizing the Insulated Metal Substrate Application with Proper Material Selection and Circuit Fabrication, The Bergquist Company. As originally published in the IPC proceedings

[11] David H. Phillips. Welding Engineering: An Introduction, 14th December 2015, Wiley

[12] Huizhou Boyu Technology Co. Ltd, www.hzsby.cn

[13] General Recommendations for Assembly of Infineon Packages, www.infineon.com

[14] Recommendations for Assembly of Infineon TO Packages, www.infineon.com

[15] S3X48-M500C-5 Product Performance Table, KOKI Company Ltd
http://www.ko-ki.co.jp/en/products/detail/2/

Revision history

Document version	Date of release	Description of changes
V1.0	2018-08-20	Initial release
V2.0	2020-01-17	Page 10, RS formula corrected Page 17, Figure 14 correction – time axis changed from sec to min

Trademarks
All referenced product or service names and trademarks are the property of their respective owners.

Edition 2020-01-17

Published by

Infineon Technologies AG

81726 Munich, Germany

© 2020 Infineon Technologies AG. All Rights Reserved.

Do you have a question about this document?

Email: erratum@infineon.com

Document reference
AN2018-23

IMPORTANT NOTICE

The information contained in this application note is given as a hint for the implementation of the product only and shall in no event be regarded as a description or warranty of a certain functionality, condition or quality of the product. Before implementation of the product, the recipient of this application note must verify any function and other technical information given herein in the real application. Infineon Technologies hereby disclaims any and all warranties and liabilities of any kind (including without limitation warranties of non-infringement of intellectual property rights of any third party) with respect to any and all information given in this application note.

The data contained in this document is exclusively intended for technically trained staff. It is the responsibility of customer's technical departments to evaluate the suitability of the product for the intended application and the completeness of the product information given in this document with respect to such application.

For further information on the product, technology, delivery terms and conditions and prices please contact your nearest Infineon Technologies office (**www.infineon.com**).

Please note that this product is not qualified according to the AEC Q100 or AEC Q101 documents of the Automotive Electronics Council.

WARNINGS

Due to technical requirements products may contain dangerous substances. For information on the types in question please contact your nearest Infineon Technologies office.

Except as otherwise explicitly approved by Infineon Technologies in a written document signed by authorized representatives of Infineon Technologies, Infineon Technologies' products may not be used in any applications where a failure of the product or any consequences of the use thereof can reasonably be expected to result in personal injury.