

Infineon Customer Connector

Solid State Relays 600 V

Infineon Technologies AG

September 2026

Restricted

Infineon Solid State Relays Overview

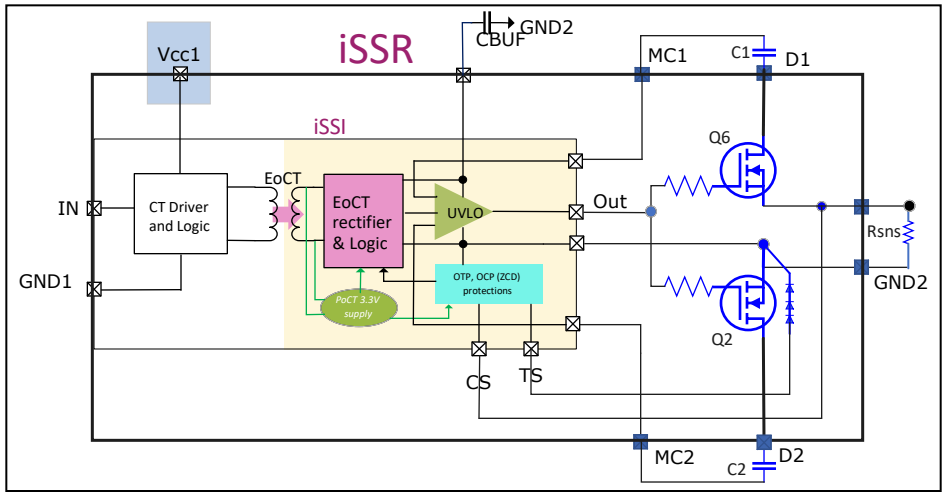

iSSR60V4A0R1H
iSSR60V2A5R1H

Package

DSO22-X 300mil

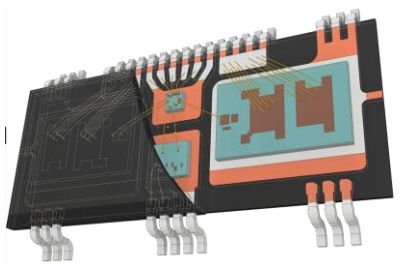

Key Specifications

Product ID	Turn On	V_{ISO}	UL1577	Vin range	Vout max	I out max	Mosfet Rds_on Typ	features	Status
iSSR60V4A0R1H	Fast Turn On	5.7kV (rms)	✓	2.85 V – 3.5 V (clamped)	600 V	4 A	40 mΩ	OTP, OCP, UVLO A – connection SPST - NO	Production
iSSR60V2A5R1H						2.5 A	65 mΩ		Production

Copyright © Infineon Technologies AG 2026. All rights reserved.

Application Benefits and Application List

SSR Product Features	SSR Product Benefits	Application Benefits
No moving parts or contact degradation Protection features	**Reliability**: Longer switching life Increased switch and system lifetime	**No** arcing. **Longer** uptime / **Lower** maintenance / **reduced** Total Cost of Ownership, no need for additional fuses and sizing of fuses in the field
Lower Power Dissipation Energy Transfer across isolation barrier	**Reduces** heat sink size or **Eliminates** the need for it No isolated power supply on output needed	**Smaller** and **reduced** BOM results in **lower** Total Cost of Ownership, space for more channels / higher channel density
Fast Switching	**Fast** turn-off for safe switches' SOA operation	**No** external MOSFETs, **reduced** space

Infineon SSR: Coreless-transformer based advanced solid-state relays
Reliable, low power, fast switching

Applications:

Relays are everywhere

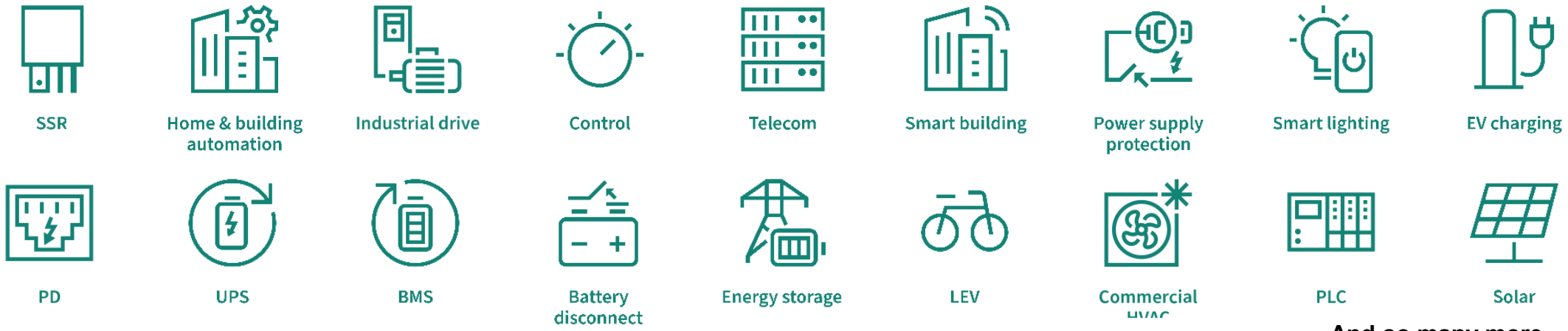

And so many more…..

Copyright © Infineon Technologies AG 2026. All rights reserved.

Guiding questions for solid state relays

Summary of key arguments

- Increased reliability over EMR & PVI/PVR
- Lower total cost of ownership
- Low power dissipation
- Reduced component count and board space over alternative solutions
- Low turn-on energy

FAQs

- Are Solid State Relays (SSR) more expensive than Electromagnetic Relays (EMR)?
  - Dependent on the use case, SSR's can be less expensive than EMR's with regards to total cost of ownership. In remote and high use applications, maintenance and system downtime could greatly increase the total cost of less reliable EMR's.
- Do SSR's have high power consumption and require heat sinks?
  - Historically, photovoltaic solutions that drive SCRs or TRIACs can have high power consumption and require large heat sinks. IFX solid state isolators drive MOSFETS with very low RDSoN and thus lower power dissipation reducing and often eliminating the need for Heat Sinks.

Questions to ask (to customers)

1. **Does your application currently use relays?**
2. **Does your application suffer from increased failure rates?**
   Solid state isolators enable much higher system level reliability.
3. **How would you prioritize cost vs. reliability?**
   Total cost of ownership should be considered in all applications as in the cases of high use or remote access, maintenance and system downtime could be quite expensive.
4. **Is EMI or switching speed important in your design?**
   EMRs will bounce while switiching creating EMI noise and also reduce the switiching speed.
5. **Would the environment for your switching application be considered hazardous?**
   EMR's often spark when switching which could be explosive in a hazardous environment.
6. **Is audible noise important for your design?**
   In applications where there are multiple switches present, the noise can be detrimental to workers.
7. **What isolation voltage is necessary for your design?**
   Solid state isolators product family is available in both 300mil and 150mil package with and without reinforced isolation with 8mm and 4mm creepage. Solid state relays product family is all 300mil with reinforced isolation.
8. **Are there board space or volume restrictions?**
   Solid state isolators and Infineon MOSFET solutions of CoolMOS™ S7 and Optimios™ 5 Linear FETs reduce or even eliminate heatsinks. Solid state relays have integrated the MOSFETs in one package.

   CT energy transfer eliminates the need for an isolated supply increasing BOM and board space.
9. **Is energy efficiency important in the application?**
   IFX solid state isolators drive lowest RDSon Infineon CoolMOS™ S7 and OptiMOS™ 5 Linear FETs that even go below the contact resistance of EMRs and also do not degrade over time.

Copyright © Infineon Technologies AG 2026. All rights reserved.

Ordering information

OPN Ordering part number	SP number Ordering Code	MDQ/MQQ/MOQ*	Registerable	Package	GBP in Eur per 100	GBP in USD per 100
iSSR60V4A0R1HXUMA1	SP006147754	100/100/1000	YES	PG-DSO-22	385.05	319.60
ISSR60V2A5R1HXUMA1	SP006147756	100/100/1000	YES	PG-DSO-22	423.30	351.56

Note:
The information presented is valid from 15 April 2026. Please check the latest Distribution Price Book for current prices and minimum quantities.

* MDQ: Minimum Design Quantity
MQQ: Minimum Quote Quantity
MOQ: Minimum Order Quantity

Copyright © Infineon Technologies AG 2026. All rights reserved.

Solid State Isolators and Relays Support Materials

Product family webpages	– www.infineon.com/iSSI – Datasheet including application note
Technical trainings (note must log-in for some material)	– Introduction to solid-state isolators and relays – Solid-state relays: Improving robustness with SSI's overtemperature protection – SSI with advanced protection features: How to use the overcurrent protection – Solid-state relays with channel selective protection – Solid-state isolators with advanced protection features: Cooking recipe for PLC output – Infineon Solid-State Isolators: Features, Benefits, and Applications – Application-focused training on Solid-State Isolators – Solid-state isolators – Infineon Tech Champion Program
MyInfineon Presentations (note must log-in)	– https://www.infineon.com/gated/solid-state-relays-and-isolators-applicationpresentation_1c190642-a8e0-48f2-9d59-1ab28f43f151
Boards	– EVAL-ISSI20R02HCS, EVAL-ISSI20R02HTS , EVAL-ISSI20R03H, EVAL-ISSI20R11H, EVAL-ISSI30R11H, EVAL-ISSI30R12H, REF_SSR_AC_DC_2A

Copyright © Infineon Technologies AG 2026. All rights reserved.

Training Resources

Further Training Courses:

Introduction to Solid-State Isolators and Relays (8-min. video)
Solid-state relays: Improving robustness with SSI's overtemperature protection (8-min. video)
SSI with advanced protection features: How to use the overcurrent protection (13-min. video)
Solid-state relays with channel selective protection (8-min. video)
Solid-state isolators with advanced protection features: Cooking recipe for PLC output (8-min. video)
SSI deep dive: Application cookbook for solid-state relays (E2) (45-min. presentation)
GIP: SSI deep dive: Get into the details of application engineering (E2) (40-min. presentation)
Next-Gen SSR Solutions: CoolMOS™ with Integrated Temperature Sensor (34-min. presentation)
Infineon Solid-State Isolators - Evaluation boards for the SSI product family (33-min. presentation)
SSI: Game-changing reliability and speed for high power solid state switching (30-min. presentation)
Infineon Solid-State Isolators: Features, Benefits, and Applications (60-min. presentation)
Application-focused training on Solid-State Isolators (27-min. presentation)

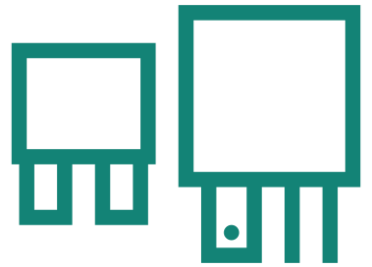

Solid-state isolators – Infineon Tech Champion Program (59-min. curriculum)

- Combination of the 5 short courses above on SSI and SSR
- 1 assessment of key learnings at the end
- Get a passing certificate after successful completion
- Available in the Infineon Academy for products and application learning



Copyright © Infineon Technologies AG 2026. All rights reserved.


Infineon