Charging up the future

Infineon total solutions for USB Type-C chargers and adapters

Luo Junyang
Lead Principal Engineer, System Architect for Charger/Adapter

restricted

Table of contents

1 Charger market typical environment 3

2 Infineon offerings and value proposition 6

3 Product highlights 14

4 Reference design 27

5 Summary 33

Copyright © Infineon Technologies AG 2024. All rights reserved.

Table of contents

1 **Charger market typical environment** **3**

2 Infineon offerings and value proposition 6

3 Product highlights 14

4 Reference design 27

5 Summary 33

Copyright © Infineon Technologies AG 2024. All rights reserved.

Key drivers behind the charger market evolution

High power
Charge bigger batteries faster
Multiport to charge multi devices in one charger

Small form factor
Makes it easier to carry from A to B
→ improved end-user experience



Unification
One charger for all mobile devices
→ improved end-user experience

Low cost
Overall BOM cost is sensitive in consumer oriented applications

Copyright © Infineon Technologies AG 2023. All rights reserved.

Moving to a USB-C powered world



Smartphone and tablets

USB-C chargers & adapters



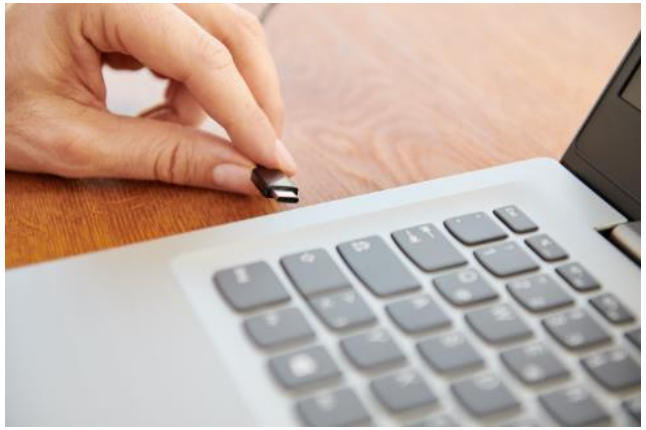

Notebook











Consumer products

Copyright © Infineon Technologies AG 2024. All rights reserved.

Table of contents

1 Charger market typical environment 3

2 **Infineon offerings and value proposition** **6**

3 Product highlights 14

4 Reference design 27

5 Summary 33

Copyright © Infineon Technologies AG 2024. All rights reserved.

Top 5 reasons to select Infineon as core partner for USB-C PD charger

Customers' benefits	Infineon's offers
1 **One-stop-shop**	– Complete product portfolio for USB-PD chargers & adapters
2 **Broad range of customer solutions**	– Streamline solution offering from cost-performance oriented solutions to (ultra-) high efficiency topologies – Output power from 30 W – 240 W, multi-port applications
3 **Price competitiveness**	– Charger & adapter application-oriented portfolios – Reference designs – High efficiency save thermal management cost
4 **Lead time and supply flexibility**	– Dedicated frontend and backend facilities as well as subcons
5 **Timely support**	– Large field application engineering team

Copyright © Infineon Technologies AG 2024. All rights reserved.

The complete product portfolio for USB-PD chargers & adapters from the one-stop-shop

Primary side	
HV switch	**Portfolio**
– **Primary switch**	– 600 V / 700 V / 800 V CoolMOS™ P7 – 600 V CoolMOS™ PFD7 – 600 V / 650 V CoolMOS™ C7
	– CoolGaN™ IGxx / GSxx 650/700 V – CoolGaN™ Smart 650 V (single HEMT + CS) – CoolGaN™ Drive 650 V (half-bridge+CS+driver)

Secondary side	
LV/MV switch/ESD	**Portfolio**
– **SR FET**	– OptiMOS™ PD 60 V, 80 V, 100 V, 120 V, 150 V – CoolGaN™ IGxx / SGxx 100 V
– **Load switch**	– OptiMOS™ PD 25 V, 30 V, 40V
– **ESD**	– V_{BUS} 3.3 V, 5 V, 15 V, 20 V

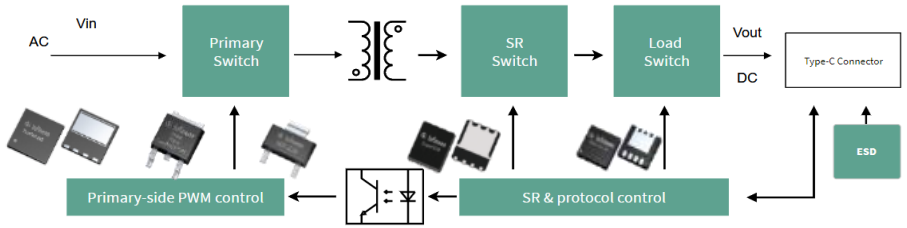

Solution offering	PWM controller	SR controller	PD controller
– **30 W – 65 W QR flyback topology**	– EZ-PD™ PAG1P	– EZ-PD™ PAG1S (programmable)	
– **45 W/65 W GaN QR ZVS & ACF topology**	– EZ-PD™ PAG2P	– EZ-PD™ PAG2S (programmable)	
– **Ultra high density > 65 W Hybrid flyback topology**	– XDP™ digital power XDPS2221	– EZ-PD™ PAG2S (programmable)	
– **Ultra high density > 65 W Hybrid multiport**	– XDP™ digital power XDPS2221	– 3rd party	– EZ-PD™ CCG3PA (programmable)
– **Ultra high density 240 W Hybrid multiport**	– XDP™ digital power XDPS2222	– 3rd party	– EZ-PD™ CCG7DC&SC (programmable)

Copyright © Infineon Technologies AG 2024. All rights reserved.

PWM & SR controllers for AC/DC stage

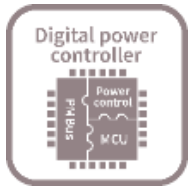

- **Full IC chipset solutions** for PWM, sync rectification and USB-PD
- Broad coverage from cost-performance oriented solutions to (ultra-) high effiency topologies; output power up to ~240 W
- Optimized chipset for multi-port applications
- ZVS control with QR, ACF, HFB topology enable the high efficiency designs

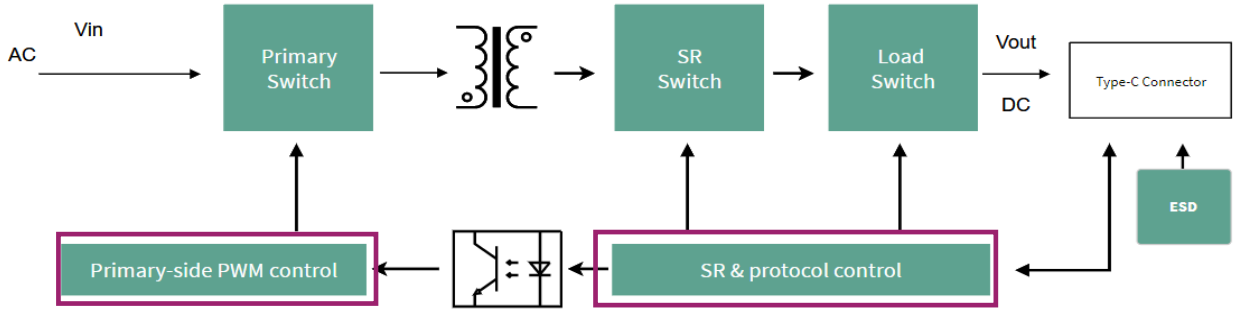

Solution offering	PWM controller	SR controller	PD controller
30 W – 65 W QR flyback topology	EZ-PD™ PAG1P	EZ-PD™ PAG1S (programmable)	
45 W/65 W GaN QR ZVS & ACF topology	EZ-PD™ PAG2P	EZ-PD™ PAG2S (programmable)	
Ultra high density > 65 W Hybrid flyback topology	XDP™ digital power XDPS2221	EZ-PD™ PAG2S (programmable)	
Ultra high density > 65 W Hybrid multiport	XDP™ digital power XDPS2221		
Ultra high density 240 W Hybrid multiport	XDP™ digital power XDPS2222		

Copyright © Infineon Technologies AG 2024. All rights reserved.

Topologies & solution positioning for AC/DC stage

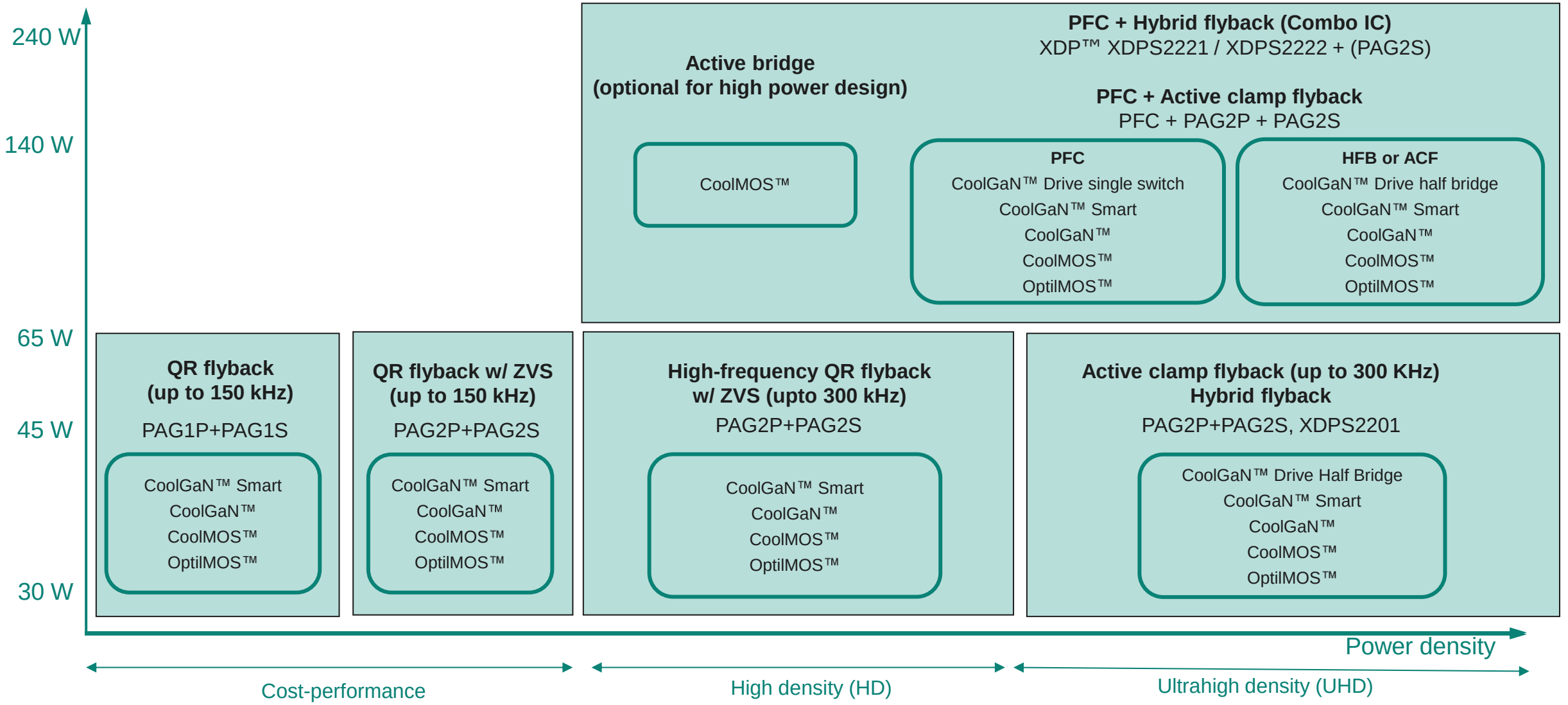

Copyright © Infineon Technologies AG 2024. All rights reserved.

Primary HV switch

Primary side	
HV switch	**Portfolio**
– **Primary switch**	– 600 V / 700 V / 800 V CoolMOS™ P7 – 600 V CoolMOS™ PFD7 – 600 V / 650 V CoolMOS™ C7
	– CoolGaN™ IGxx / GSxx 650/700 V – CoolGaN™ Smart 650 V (single HEMT + CS) – CoolGaN™ Drive 650 V (half-bridge+CS+driver)

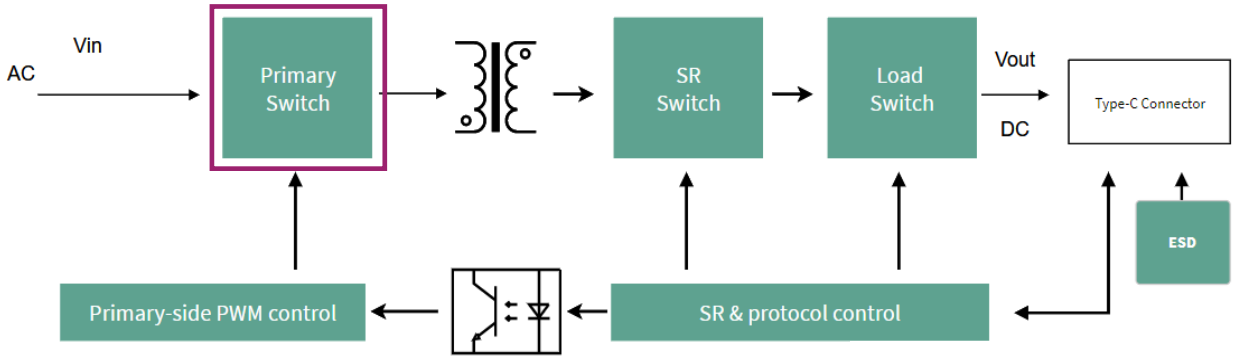

- Primary HV power switch
  - CoolGaN™ family is preferred choice which enables higher power density and higher efficiency.
  - CoolMOS™ may be selected if design is very sensitive on the system cost and willing to accept the trade-off in the performance.

Copyright © Infineon Technologies AG 2024. All rights reserved.

Secondary SR and load switch

OptiMOS™ PD

- Tailored portfolio for USB-PD with balancing cost and performance
- PQFN 5x6 and 3x3 available to shrink PCB size
- Outstand high switching performance to boost system efficiency
- Logic level devices enable low voltage gate drive performance
- Improved leadtime and cost saving

Secondary side	
LV/MV switch/ESD	**Portfolio**
– **SR FET**	– OptiMOS™ PD 60 V, 80 V, 100 V, 120 V, 150 V – CoolGaN™ IGxx / SGxx 100 V
– **Load switch**	– OptiMOS™ PD 25 V, 30 V, 40 V
– **ESD**	– V_{BUS} 3.3 V, 5 V, 15 V, 20 V

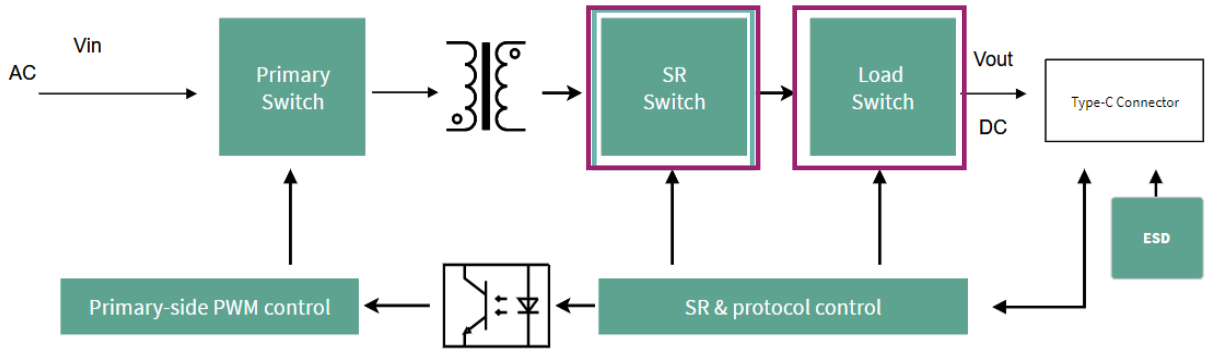

- Secondary SR, Load Switch & DC/DC Buck converter
  - Si OptiMOS™ is best choice in Charger/Adapter in term of cost / performance with frequency up to 300kHz.
  - MV GaN has the opportunity in high-frequency resonant converter with shorter dead time.

* coming soon

Copyright © Infineon Technologies AG 2024. All rights reserved.

Protocol & multiport controllers

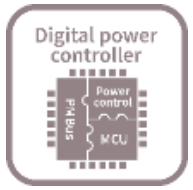

- **Full programmable solutions** for USB-PD 3.0 version 1.1 and customized protocols.
- Scalable and unified design for your multiport charger and adaptor (2-4 Ports)
- Support power policy manager and **dynamic load-sharing** amount USB-C ports
- Support optocoupler and digital-based feedback control mechanism

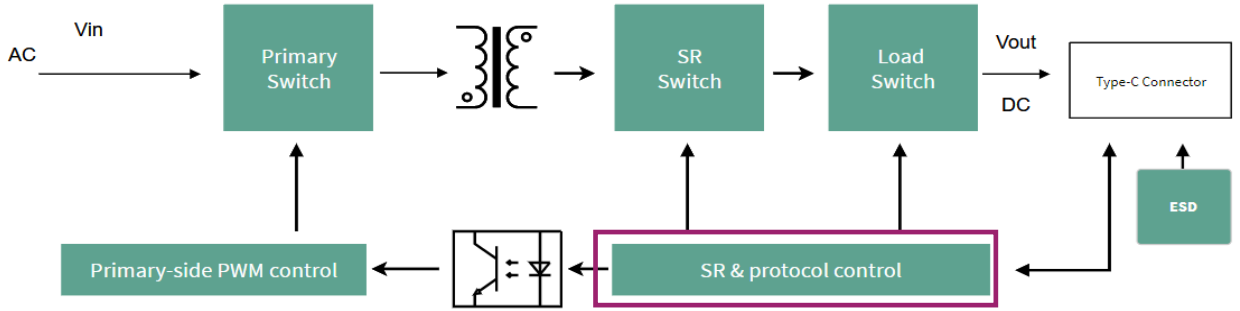

SR controller	PD controller
– EZ-PD™ PAG1S (programmable)	
– EZ-PD™ PAG2S (programmable)	
	– EZ-PD™ CCG3PA (programmable)
	– EZ-PD™ CCG7DC&SC (programmable)

Copyright © Infineon Technologies AG 2024. All rights reserved.

Table of contents

1 Charger market typical environment 3

2 Infineon offerings and value proposition 6

3 **Product highlights** **14**

PWM, SR & PD controllers 15

Power Switch 22

4 Reference design 27

5 Summary 33

Copyright © Infineon Technologies AG 2024. All rights reserved.

Table of contents

1 Charger market typical environment 3

2 Infineon offerings and value proposition 6

3 **Product highlights** **14**

PWM, SR & PD controllers 15

Power Switch 22

4 Reference design 27

5 Summary 33

Copyright © Infineon Technologies AG 2024. All rights reserved.

PAG2 – Secondary-side controlled QR ZVS

System / application overview

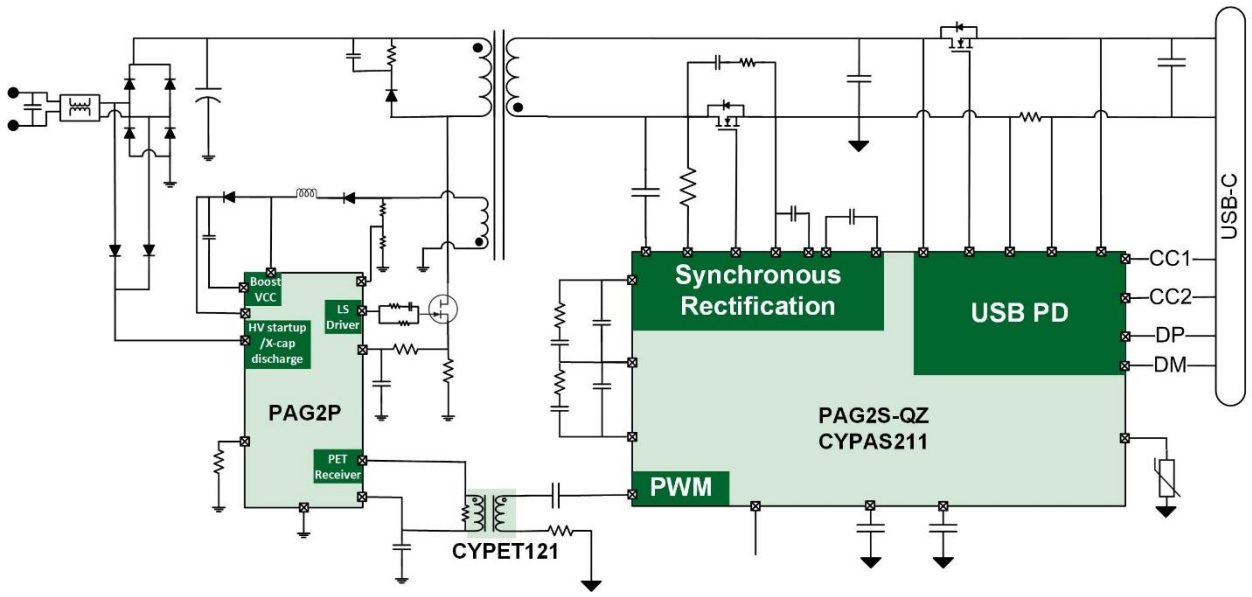

Highlights

- Works across AC mains 85~265 Vac
- Secondary-side controlled PWM converter
- Integrated HV startup circuit
- Achieve > 93% efficiency at 90Vac input
- X-cap Discharge and non X-cap available
- Support power level up to 65 W (20 V @ 3.25 A)
- UVP, OVP and OCP protection
- QR ZVS topology supported
- Meet all regulatory requirement (safety and EMC directive)
- Low standby power < 30 mW
- Programmable digital valley table
- Programmable dead-time and ZVS pulse width
- Support PD3.1 28 V EPR and SPR
- Secondary-side controlled ZVS switching
- Meet CoC Tier2 and ErP efficiency standard

* CRM: Continuous resonant mode
** ZV-RVS: Zero voltage resonant valley switching

Copyright © Infineon Technologies AG 2024. All rights reserved.

PAG2 – Secondary-side controlled NCP-ACF

System / application overview

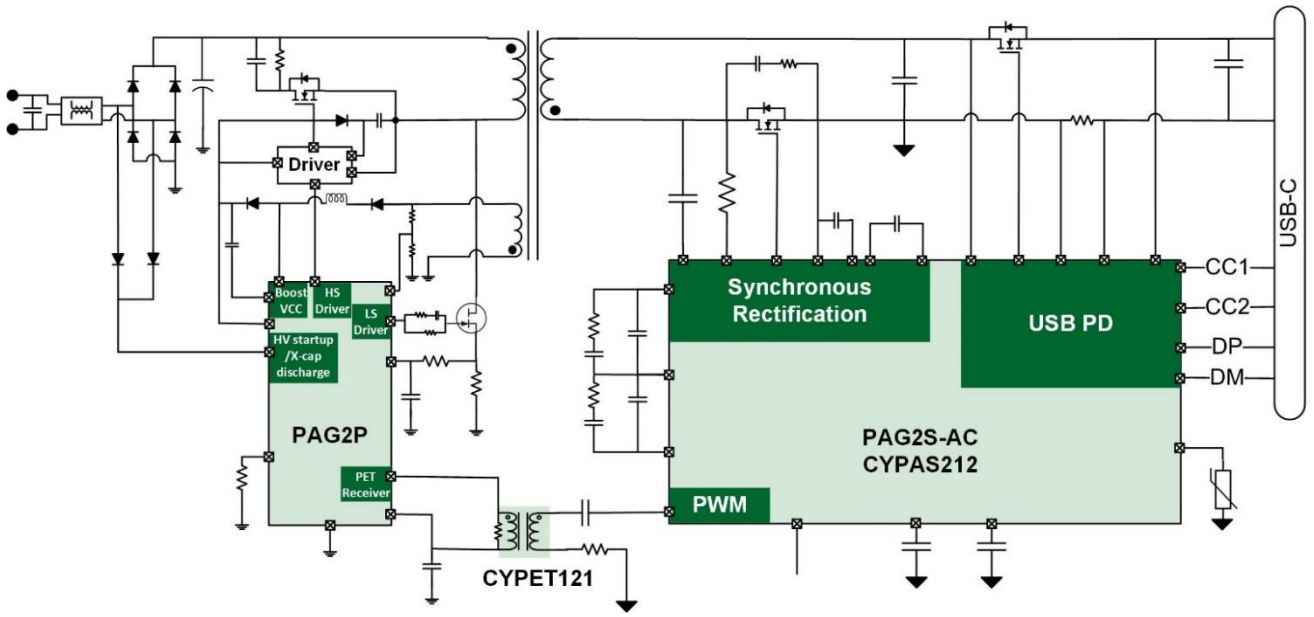

Highlights

- Works across AC mains 85~265 Vac
- Secondary-side controlled PWM converter
- Integrated HV startup circuit
- Achieve > 93% efficiency at 90Vac input
- X-cap discharge and non X-cap available
- Support power level up to 65 W (20 V @ 3.25 A)
- UVP, OVP and OCP protection
- ACF topology supported
- Meet all regulatory requirement (safety and EMC directive)
- Low standby power < 30 mW
- Programmable digital valley table for efficiency optimization
- Programmable dead-time and ACF pulse width
- Support PD3.1 28 V EPR and SPR
- Leakage energy recycling and ZVS switching
- Meet CoC Tier2 and ErP efficiency standard

* CRM: Continuous resonant mode
** ZV-RVS: Zero voltage resonant valley switching

Copyright © Infineon Technologies AG 2024. All rights reserved.

XDP™ digital power XDPS2221: PFC + Hybrid flyback combo IC

Typical application

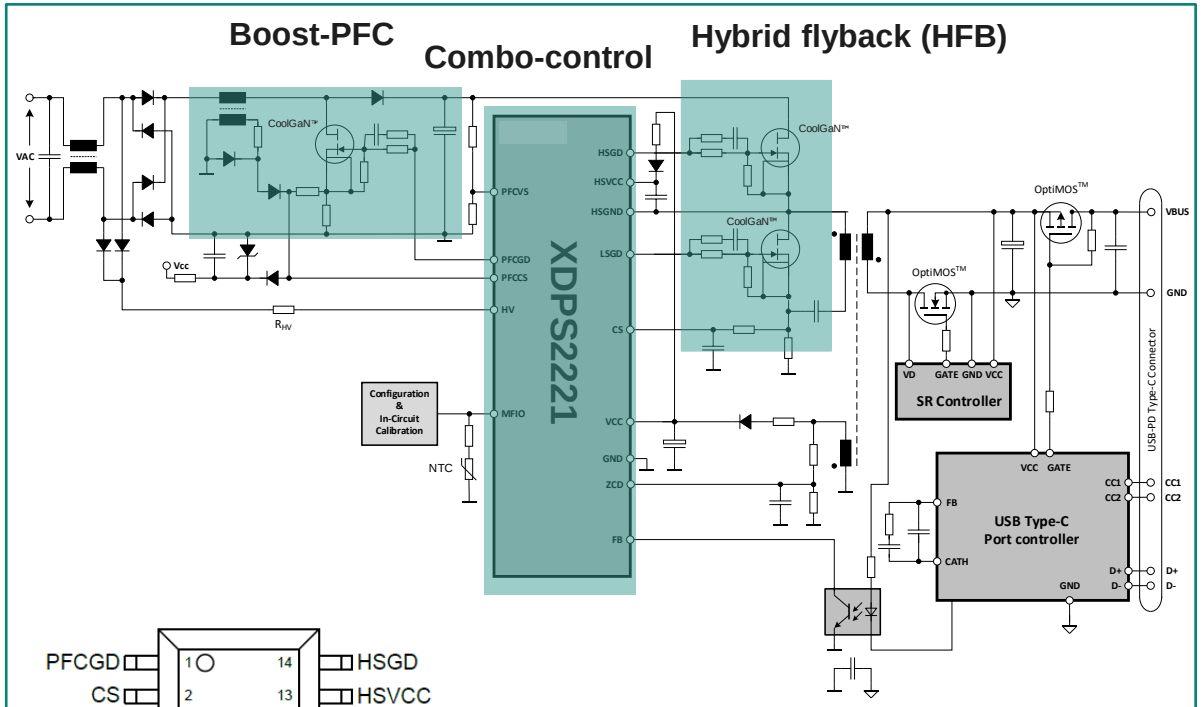

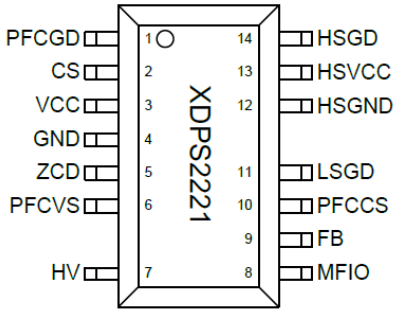

Inherent HFB topology advantages

- Low voltage stress on primary and secondary switches
- Small transformer by resonant energy transfer

Key features

- 600 V high voltage start-up cell for fast VCC charging and certified active X-capacitor discharge
- Novel ZVS hybrid flyback topology (asymmetrical half-bridge) for ultra-high system efficiency
- HFB peak current control for robust and fast control
- HFB ZVS operation of high-side and low-side switch (with ZVS pulse insertion in DCM)
- PFC QRM multimode operation for improved efficiency
- Harmonized PFC and hybrid flyback control
- Burst mode operation control for lowest stand-by power
- Integrated gate drivers supporting GaN switches
- Configurability for protections and system performance
- DSO-14 (150mil) package

Copyright © Infineon Technologies AG 2024. All rights reserved.

XDP™ digital power XDPS2222: PFC + Hybrid flyback combo IC

Typical application

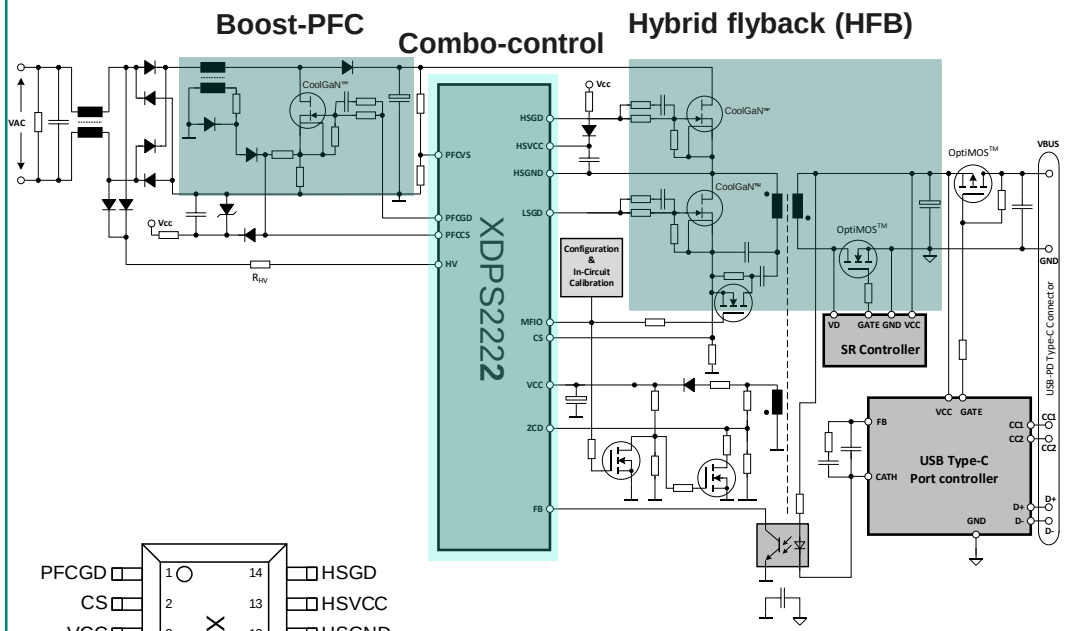

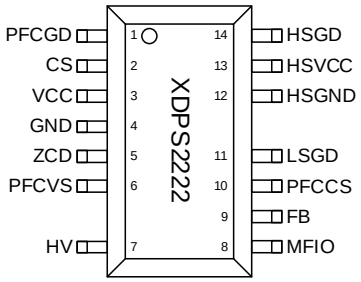

Inherent HFB topology advantages

- Low voltage stress on primary and secondary switches
- Small transformer by resonant energy transfer

Key features

- 600 V high voltage start-up cell for fast VCC charging
- Novel ZVS hybrid flyback topology (asymmetrical half-bridge) for ultra-high system efficiency
- HFB peak current control for robust and fast control
- HFB ZVS operation of high-side and low-side switch (with ZVS pulse insertion in DCM)
- PFC QRM multimode operation for improved efficiency
- Harmonized PFC and hybrid flyback control
- Burst mode operation control for lowest stand-by power
- **Supports extra wide output voltage range with MFIO switching depending on output voltage**
- Integrated gate drivers supporting GaN switches
- Configurability for protections and system performance
- DSO-14 (150mil) package

Copyright © Infineon Technologies AG 2024. All rights reserved.

EZ-PD™ CCG3PA-NFET & CCG3PA USB-C protocol controller

Use case

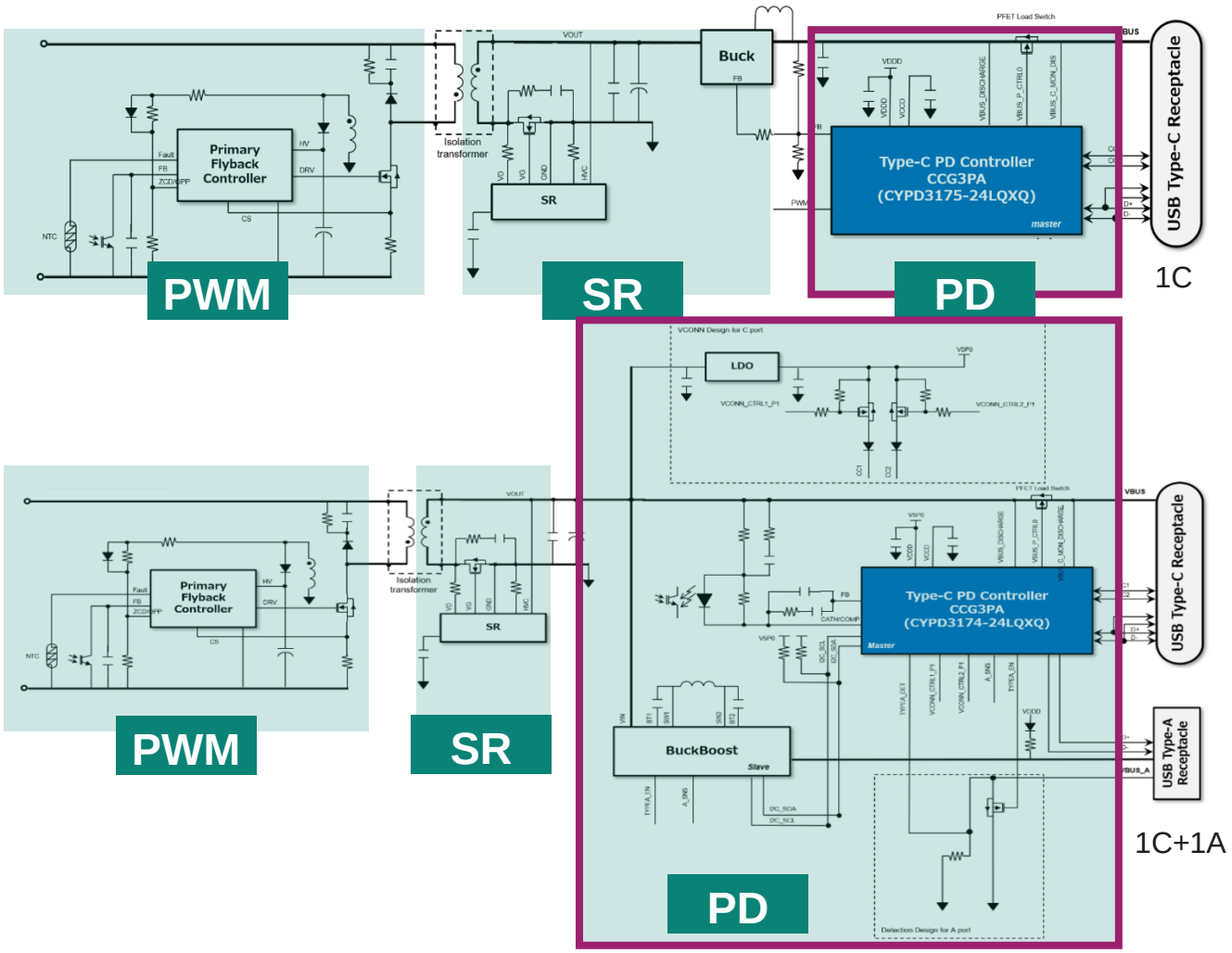

Key feature

- **Type-C support and USB-PD support**
  - Supports USB PD3.0 version 1.1 spec including programmable power supply mode
  - Supports one USB Type-C port and one Type-A port
- **Integrated voltage (VBUS) regulation and current sense amplifier**
  - Analog regulation of secondary side feedback node (direct
  - feedback or opto coupler)
  - Integrated shunt regulator function for VBUS control
  - Constant current or constant voltage mode
  - Supports low-side current sensing for constant current control
- **System-level fault protection**
  - VBUS to CC short protection
  - On-chip OVP, OCP, UVP, and SCP
  - Supports OTP through integrated ADC circuit
- **32-bit MCU subsystem**
  - Arm cortex-M0 CPU
  - 64-KB Flash
  - 8-KB SRAM
- **System-level ESD protection**
  - ± 8-kV contact discharge and ±15-kV air gap discharge based on IEC61000-4-2 level 4C
- Packages: 24-pin QFN and 16-pin SOIC

Copyright © Infineon Technologies AG 2024. All rights reserved.

EZ-PD™ CCG7SC/CCG7DC
Multiport USB-PD and buck integrated controller





Application block diagram

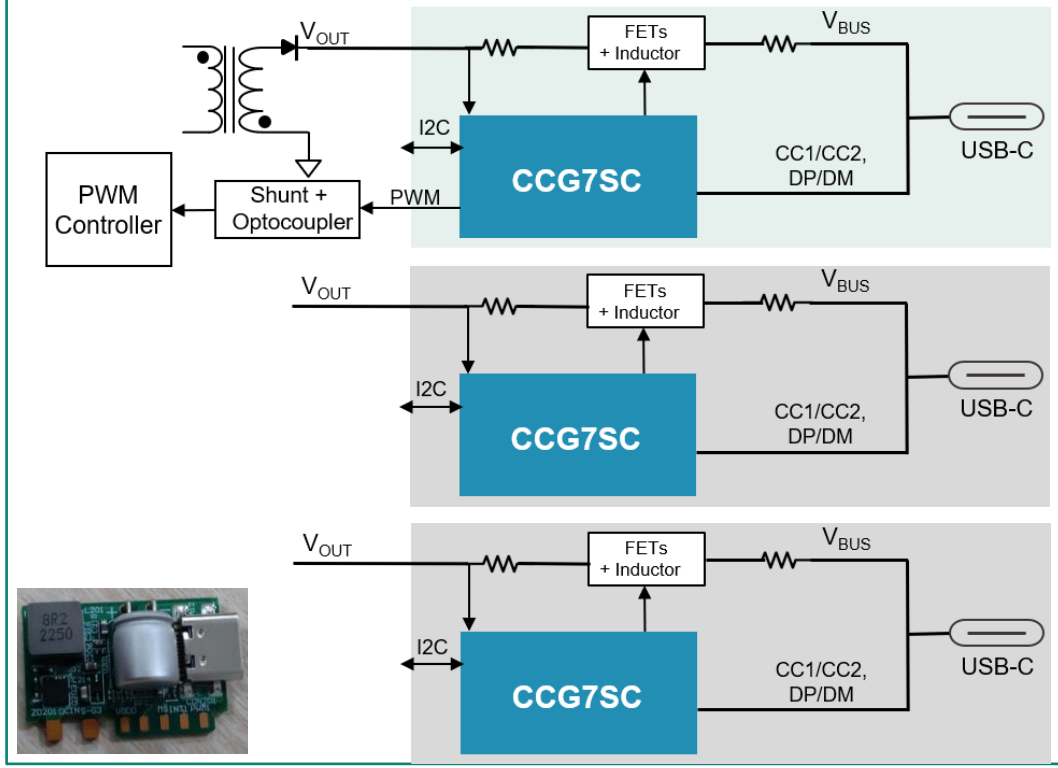

Features

- Support power policy manager and dynamic load-sharing amount USB-C ports
- Unique Buck-Bypass and adaptive-duty control methodologies to meet up efficiency standards such as DoE VI
- Scalable and unified design for your multiport charger and adapter (2-4 Ports)
- Secondary side PFC/Flyback/SR control with IOs
- Support optocoupler and digital-based feedback control mechanism

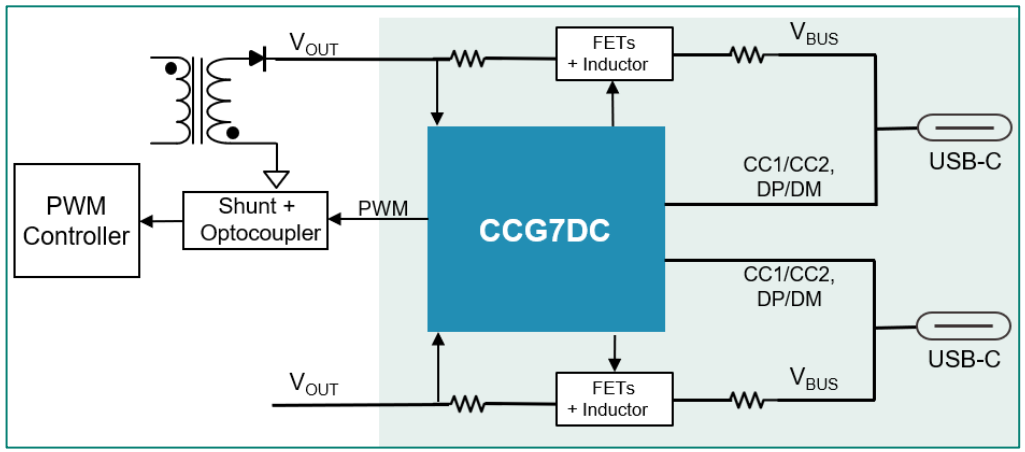





Copyright © Infineon Technologies AG 2024. All rights reserved.

Table of contents

1 Charger market typical environment 3

2 Infineon offerings and value proposition 6

3 **Product highlights** **14**

PWM, SR & PD controllers 15

Power Switch 22

4 Reference design 27

5 Summary 33

Copyright © Infineon Technologies AG 2024. All rights reserved.

CoolGaN™ 600 V and above

GaN features

- **10x** higher breakdown field and **2x** higher mobility
- **10x** lower output charge
- **Zero** reverse recovery charge
- **10x** lower gate charge and linear C_{oss}

Technical benefits

- Very low $R_{DS(on)}$ and large cost-down potential
- Better efficiency in resonant circuits
- Support high switching frequency with very low switching loss
- Power stage integration with lossless current sensing and protection

Customer benefits

- Higher efficiency → high **output power**
- High power density → **smaller** and **lighter designs**

Flexibility → **Full system**

Discrete solution

CoolGaN™ Transistor

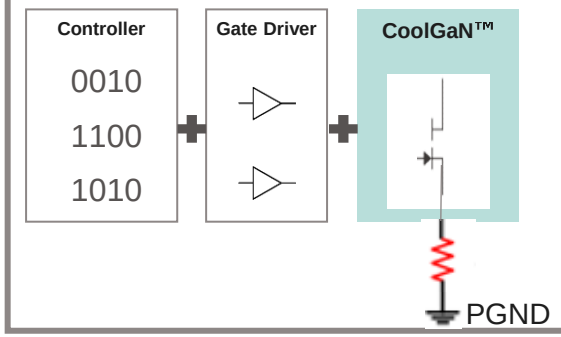

CoolGaN™ Smart

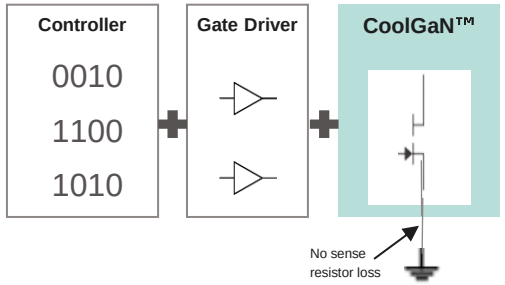

Integrated power solution

CoolGaN™ Drive

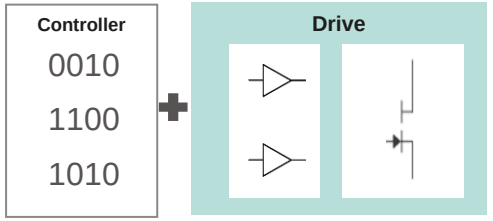

System solution

CoolGaN™ Control

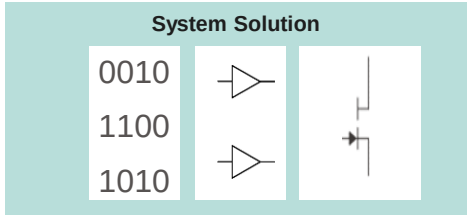

Copyright © Infineon Technologies AG 2024. All rights reserved.

Additionally, we source from a robust dual supply chain – a benefit no other GaN supplier can offer

Two independent production streams

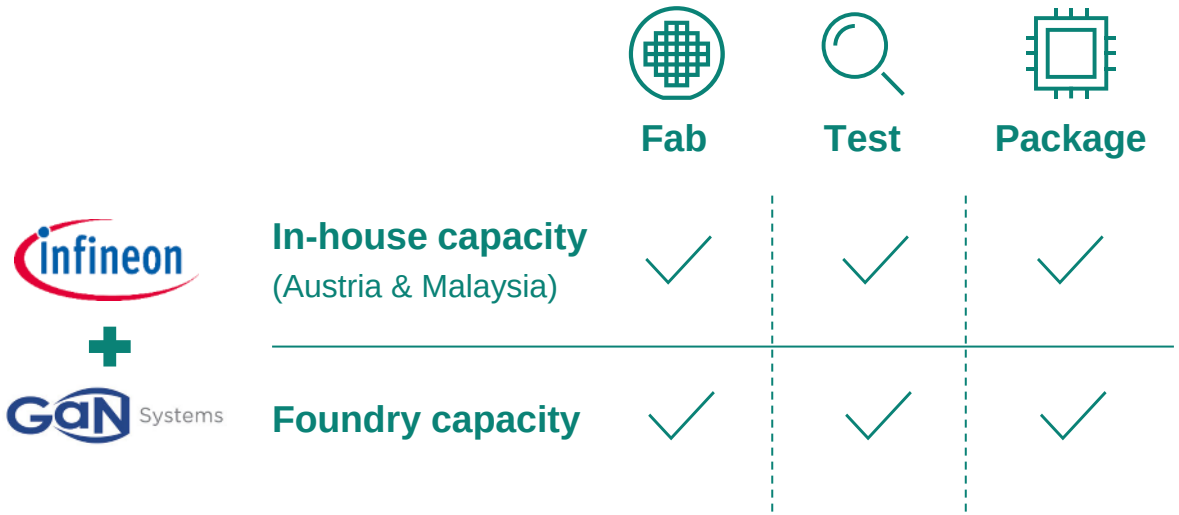

Powerful dual sourcing in a single entity

- A single entity that manages **two independent production streams** from wafer to packaging
- **Infineon and GaN Systems** brings the **maximum in GaN supply stability -** unmatched in the industry
- The globally diversified production footprint ensures **geopolitical and natural risks are minimized**

Infineon and GaN systems provides the benefit of dual sourcing – in a single entity

Copyright © Infineon Technologies AG 2024. All rights reserved.

Si CoolMOS™ 600 V and above

700/800/950 V CoolMOS™ P7 — 600 V CoolMOS™ P7/PFD7

Suitable for

Flyback topologies

Smartphone



Tablet





SOT223



Dpack



ThinPak 5x6



ThinPak 8x8

Notebook



Accessory power



Suitable for

PFC, HFB, LLC topologies

Technology corner stones

- **Price competitive** compared to similar competitor technologies
- Supports **increased switching frequency** to reduce magnetics
- Integrated zener diode
- **Best fit** for **target applications** in terms of
  - Thermals and efficiency
  - Ease-of-use level
- Fulfilling common EMI criteria

- **Best balanced technology** of all CoolMOS™ families
- Integrated Zener diode
- **Perfect combination** of
  - Highest efficiency
  - Excellent ease-of-use & commutation ruggedness
  - Competitive price
  - Outstanding portfolio granularity

Copyright © Infineon Technologies AG 2024. All rights reserved.

Si OptiMOS™ 30 V ~ 150 V

- OptiMOS™ **meets efficiency standards** even in a 3x3 package
- OptiMOS™ enables **high power density designs**
- **Low VF** body diode during forward conduction

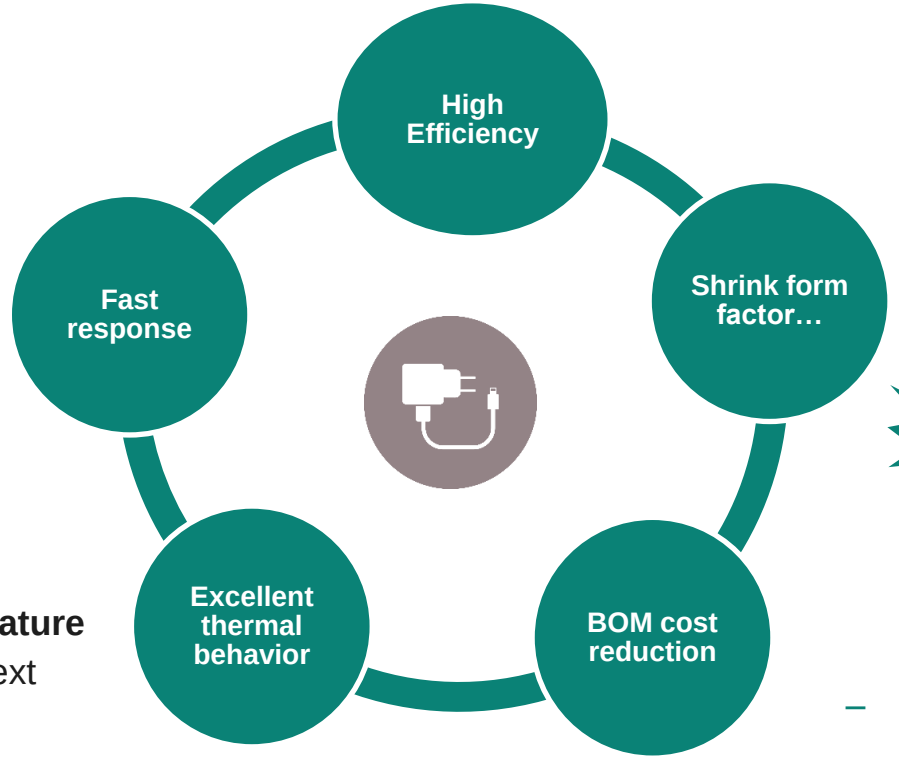

- …with OptiMOS™ in **5x6 and 3x3 packages**

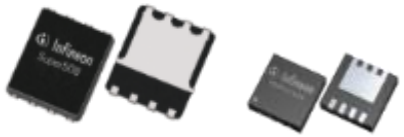

- Quick quote response
- Short lead times

NEW

- Smallest **2x2 PQFN package with up to 40V** for **maximum power density** and **system cost reduction**



- OptiMOS™ achieves **lower temperature** in a 3x3 package compared to the next best alternative in 5x6

- OptiMOS™ provides **lower charges** for:
  - Less switching losses
  - Excellent price/performance ratio

Copyright © Infineon Technologies AG 2024. All rights reserved.

Table of contents

1 Charger market typical environment 3

2 Infineon offerings and value proposition 6

3 Product highlights 14

4 **Reference design** **27**

5 Summary 33

Copyright © Infineon Technologies AG 2024. All rights reserved.

USB-C charger & adapter - reference design overview

Power rating (W)	65	65	45	65	65	140	140	240
Topology	QR flyback	QR flyback	QR flyback	QR flyback	ACF	HFB	HFB	HFB
Primary/secondary control	Secondary	Secondary	Secondary	Secondary	Secondary	Primary	Primary	Primary
PWM IC	PAG1P	PAG1P	PAG1P	PAG1P	PAG2P	XDPS2221	XDPS2221	XDPS2222
SR IC	PAG1S	PAG1S	PAG1S	PAG1S	PAG2S	3rd party	PAG2S	3rd party
USB-PD IC				CCG7D		CCG3PA		CCG3PA
High-voltage PWM switch	CoolMOS™	CoolGaN™	CoolGaN™	CoolMOS™	CoolGaN™	CoolGaN™	CoolGaN™	CoolGaN™
Medium-voltage SR switch	OptiMOS™	OptiMOS™	OptiMOS™	OptiMOS™	OptiMOS™	OptiMOS™	OptiMOS™	OptiMOS™
V_{BUS} Switch (Load switch)	OptiMOS™	OptiMOS™	OptiMOS™	OptiMOS™	OptiMOS™	OptiMOS™	OptiMOS™	OptiMOS™
No of output Ports (C=type C)	1C	1C	1C	2C	1C	1C	1C	1C
Uncased size in in mm x mm x mm	52 x 42 x 22	52 x 42 x 22	39 x 35.4 x 30.2	51 x 51 x 29	30 x 34 x 32	110 x 39 x 24.	110 x 39 x 24.	75 x 70 x 30
Uncased power density (W/in^3)	22.16	22.16	17.71	14.12	31.9	22.7	22.7	25
Full load efficiency @ High line Vin	90.78%	91.82%	90.51%	89.81%	94%	94.92	93.45	96.17
Full load efficiency @ Low line Vin	88.62%	90.40%	91.25%	89.57%	93%	93.51	92.43	94.82
CoC Tier 2 & DoE Level VI compliance	✓	✓	✓	✓	✓	✓	✓	✓
Standby Power (mW) – 230 V_{AC}	<50	<50	<30	<50	<50	<65	<110	<65
Feedback loop	Pulse trf	Pulse trf	Pulse trf	Pulse trf	Pulse trf	Opto cplr	Opto cplr	Opto cplr
Programmable USB-PD protocol functionality	✓	✓	✓	✓	✓	✓	✓	✓
USB-PD PPS feature	✓	✓	✓	✓	✓	✓	✓	✓

Copyright © Infineon Technologies AG 2023. All rights reserved.

Reference design
65 W EZ-PD™ PAG1S+1P+CCG7DC 2C

65 W USB-PD

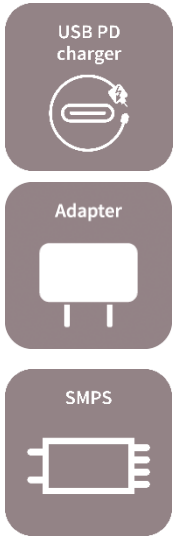

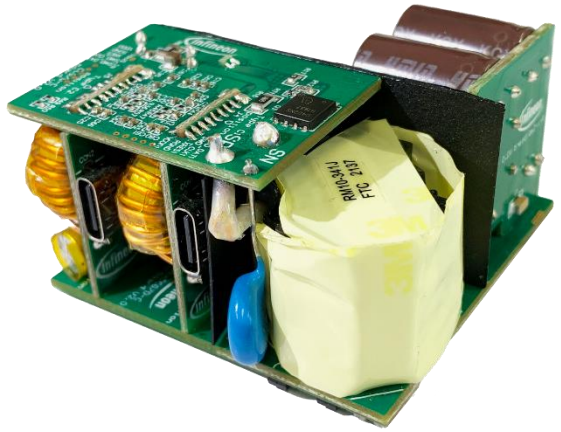

Small amount available
Contact with Sales

Technical details

Function	Part number
Input voltage	100 – 240 V_{AC}
Input frequency	47 – 63 Hz
Output voltage/current	Single port: PDO-fixed: 5 V / 3 A, 9 V / 3 A, 12 V / 3 A, 15 V / 3 A, 20 V / 3.25 A PPS: 3.3 V – 21 V / 3.25 A Dual port: 45 W: 5 V / 3 A, 9 V / 3 A, 12 V / 3 A, 15 V / 3 A, 20 V / 2.25 A, 3.3 V – 16 V / 3 A
Output power	65 W
Efficiency	91.01% (at 230 VAC-50 Hz, 20 V-3.25 A)
Input standy power	55 mW @ 264 V_{in}
Power density (uncased)	14.12 W/in³
Board dimensions	51 x 51 x 29 mm (L x W x H)

Parameter	Value
Primary PWM controller	PAG1P
Primary switch	IPL60R195C7
Secondary SR MOSFET	BSC0402NS
V_{BUS} Switch	BSZ0902
DC-DC H-bridge switch	BSZ063N04LS6
SR controller	PAG1S
Dual port controller	CCG7DC

Features

- Infineon’s EZ-PD™ PAG1S and PAG1P controllers
- Dual port USB-PD controller CCG7DC integrated buck-boost controllers
- Best fit of ThinPAK 8x8 package of HV switch.
- Digital control with programmable feasibility

Benefits

- Meets the global efficiency standards including DoE Level VI
- Offers a low standby power of <55 mW
- Passes the conducted emission as per EN 55032 B standard
- Allow for high performance PD / PPS / QC compliant solutions.

Copyright © Infineon Technologies AG 2023. All rights reserved.

Reference Design
65W PAG2S+2P 1C ACF

Simplified schematic

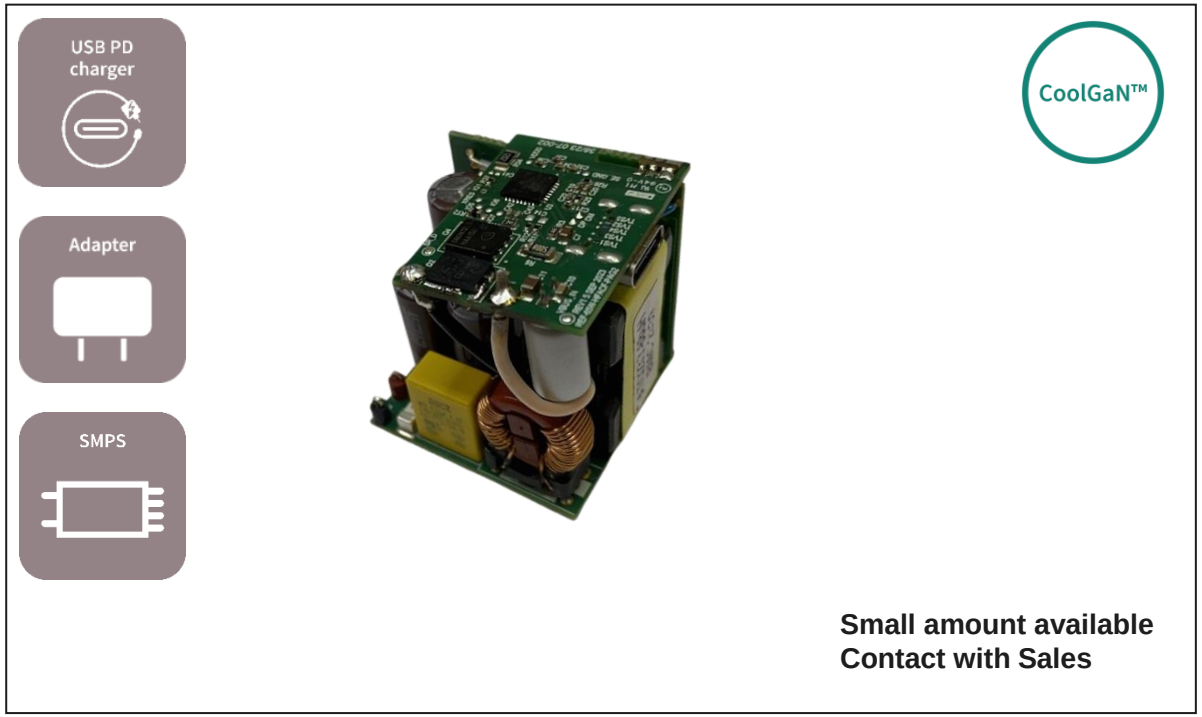

Small amount available
Contact with Sales

Target specification

Parameter	Value
Input	V_{IN} = 90 – 264 V_{AC}, 50..60Hz
Output	V_{OUT} = 5~21Vdc /3.25A
Efficiency	115Vac: >93 % 230Vac: >94 %
Protection	Input: BI/BO, OPP, OCP Output: OCP, SCP, OVP, UVP, and OTP
Special	Secondary side control of high-side switch Active Clamp Flyback (ACF) control scheme
Dimension	30.5 mm x 34.3mm x 32 mm
Power density	31.9 W/in³

Function	Part number
PWM controller	PAG2P
PWM switch	GS-065-009-6S-L
Clamping switch	GS-065-009-6S-L
SR+PD controller	PAG2S
Secondary SR switch	BSC080N12LS
USB-PD safety switch	BSZ0909LS

Features

- USB-C single-port solution with USB-C PD 3.1 65 W with PPS
- Secondary-side controlled multi-mode flyback converter
- Best-in-class form factor design with high-frequency NCP-ACF topology
- Support 200% and 150% peak load requirements for notebook adapter
- Compliance with DOE Level VI, CoC Tier 2, EuP Lot6, and IEC62368

Benefits

- USB-PD compliant up to 65 W
- Industry-benchmark power density
- Very high efficiency over the whole output voltage and load range
- High forward integration for lowest system BOM
- Best performance and highly flexible system parameterization

Copyright © Infineon Technologies AG 2023. All rights reserved.

Reference design
140W HFB+PAG2S 1C

Simplified schematic

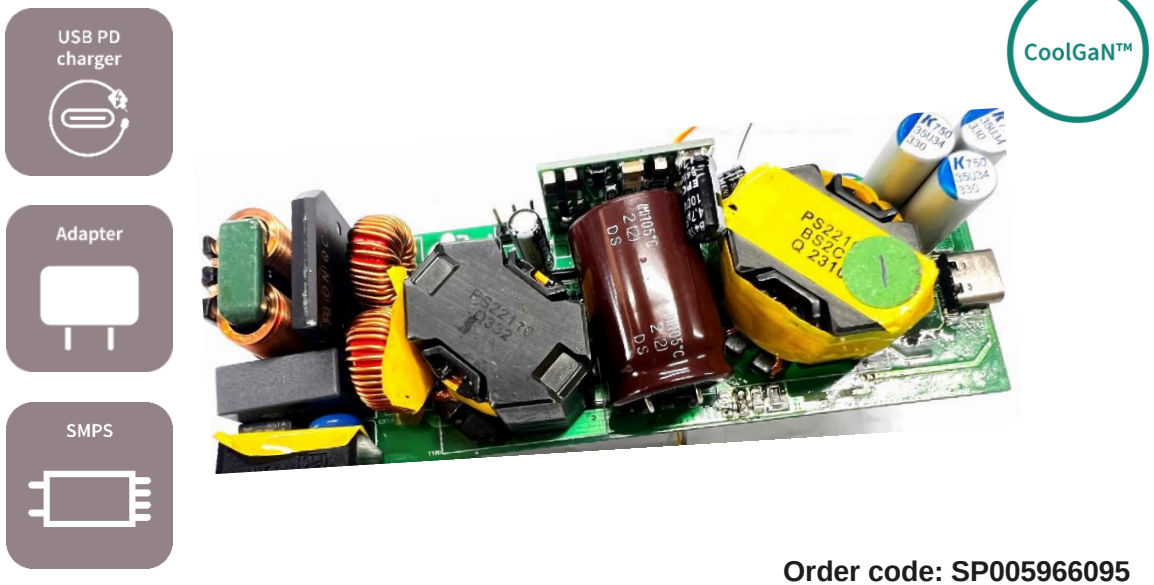

Order code: SP005966095

Specification

Parameter	Value
Input voltage	90 $V_{AC,rms}$ – 264 $V_{AC,rms}$
Output voltage / current	V_{OUT} = 5~28Vdc, I_{OUT_max} = 5A
Max. nom. power	140 W
Peak efficiency	94.6%
Dimensions (uncased)	109.5 x 38.5 x 24.0 mm³
Power density (uncased)	22.7 W/in³

Function	Part number
Primary PWM controller	XDPS2221* (XDP™ digital power)
PFC switch	IGLD60R190D1 (CoolGaN™ 600 V)
PWM switch	2x IGLD60R190D1 (CoolGaN™ 600 V)
SR+PD IC	PAG2S
Secondary SR MOSFET	BSC04N10NS5
Load switch	BSZ018N04LS6

Features

- USB-C single-port solution with USB-PD 3.1 for 5 V – 28 V output range
- Small form factor system design
- CrCM PFC + Hybrid flyback topology
- PAG2S to support 28V EPR with programming flexibility
- Compliance to DOE Level VI, CoC Tier

Benefits

- USB-PD compliant up to 140 W
- Industry-benchmark power density with CoolGaN
- Very high efficiency over the whole output voltage and load range
- SR+PD integration in one chip
- Best performance and highly flexible system parameterization

Copyright © Infineon Technologies AG 2023. All rights reserved.

Reference design
240 W Hybrid flyback

240 W USB-PD EPR charger with CoolGaN™

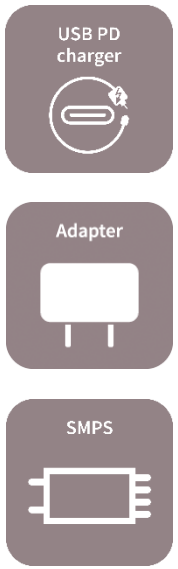

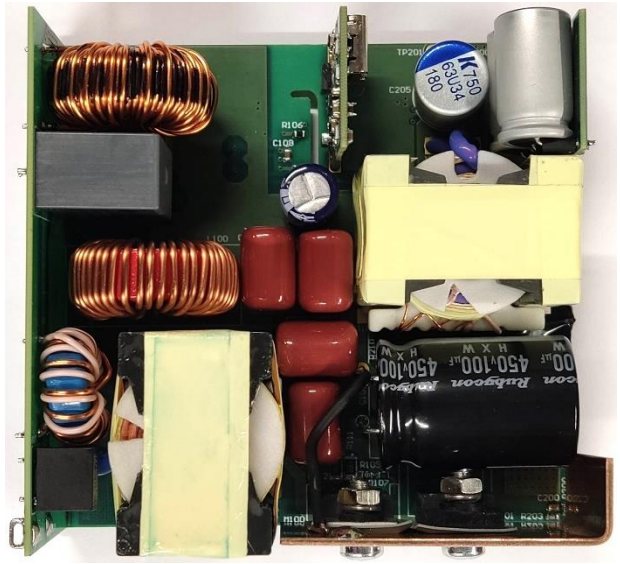

CoolGaN™

Coming soon

Technical details

Parameter	Value
Input voltage	90 $V_{AC,rms}$ – 264 $V_{AC,rms}$
Output voltage / current	5 V, 9 V, 15 V / 3 A 20 V, 28 V, 36 V, 48 V / 5 A
Max. nom. power	240 W
Peak efficiency	**95.92 %**
115Vac/full load efficiency	**94.7 %**
Dimensions (uncased)	75 mm x 70 mm x 30 mm
Power density (uncased)	25 W/in³

Function	Part number
Primary controller	XDPS2222
Active bridge	IPL60R065P7 x4
PFC switch	IPP65R065C7
PWM switch	IGLD60R190D1 x2
Secondary SR switch	ISC073N12LM6
USB-PD controller	EZ-PD™ CCG3PA CYPD3175

Features

- XDPS2222 Combo IC CrM PFC + HFB flyback topology
- 5V-48V USB-PD EPR high-density, wide-output voltage range
- Digital control with advanced modulation methods

Benefits

- Very high power density of 25 W/inch³ (uncased)
- Wide voltage range output ports (5 V – 48 V)
- Universal input voltage range (90 $V_{AC,rms}$ – 264 $V_{AC,rms}$)

Copyright © Infineon Technologies AG 2023. All rights reserved.

Table of contents

1 Charger market typical environment 3

2 Infineon offerings and value proposition 6

3 Product highlights 14

4 Reference design 27

5 **Summary** **33**

Copyright © Infineon Technologies AG 2024. All rights reserved.

Summary

- **One-stop-shop solution:**
  - Infineon provide One-stop-shop solution for chargers & adapters including the products of PWM controller, synchronous rectification controller, protocol & multiport controller, high voltage Si MOSFET, high voltage GaN, medium & low voltage power switches, ESD protection diodes.

- **Topologies and controllers**:
  - Infineon has streamline solutions to address the power segments from 30 W to 240 W with right-fit topologies to cover the application requirements from cost-performance to ultra high density.

- **Primary HV power switch**
  - CoolGaN™ family enables higher power density and higher efficiency.
  - CoolMOS™ may be selected if the design is very sensitive to the system cost and willing to accept the trade-off in the performance.

- **Secondary MV/LV power switch**
  - Si OptiMOS™ is the best choice in chargers & adapters in terms of cost or performance.
  - MV GaN has the opportunity in a high-frequency resonant converter with shorter dead time.

Copyright © Infineon Technologies AG 2024. All rights reserved.


Infineon