

Reverse-conducting IGBTs and Gate Driver solutions for induction cooking applications

September 2023

restricted

Featuring the **high efficiency**, **accurate control** and **smart connectivity**, induction cookers represent the best choice in modern kitchens.

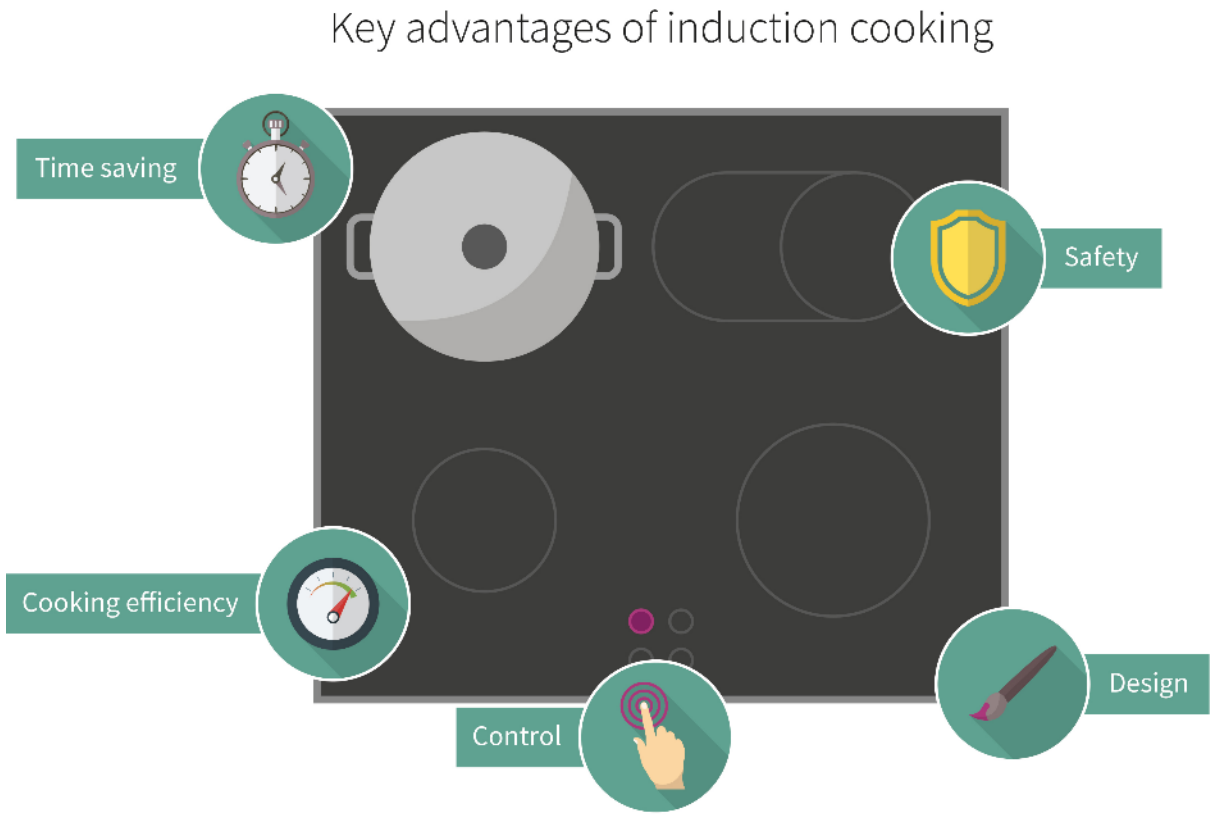

Copyright © Infineon Technologies AG 2023. All rights reserved.

Induction cooker application landscape

Tabletop cookers



- Widely diffused in Asia
- Typical output power: up to ~2100 W

Multi-hob cookers



- Popular in Europe, Asia (esp. Korea) and North America
- Typical output power: 3600 W (single phase grid) .. 7200 W (three phase grid)

Rice/multi-cookers



- Multi-cookers using induction heating principle to cook rice, warm porridge, etc.
- Typical output power: up to ~1500 W

Inverterized microwave ovens*



- Microwave ovens which use an inverterized or variable power magnetron to cook food
- Typical output power: 900 W – 1500 W

*doesn't use induction, but uses the same topology

Copyright © Infineon Technologies AG 2023. All rights reserved.

Block diagram – Induction cookers

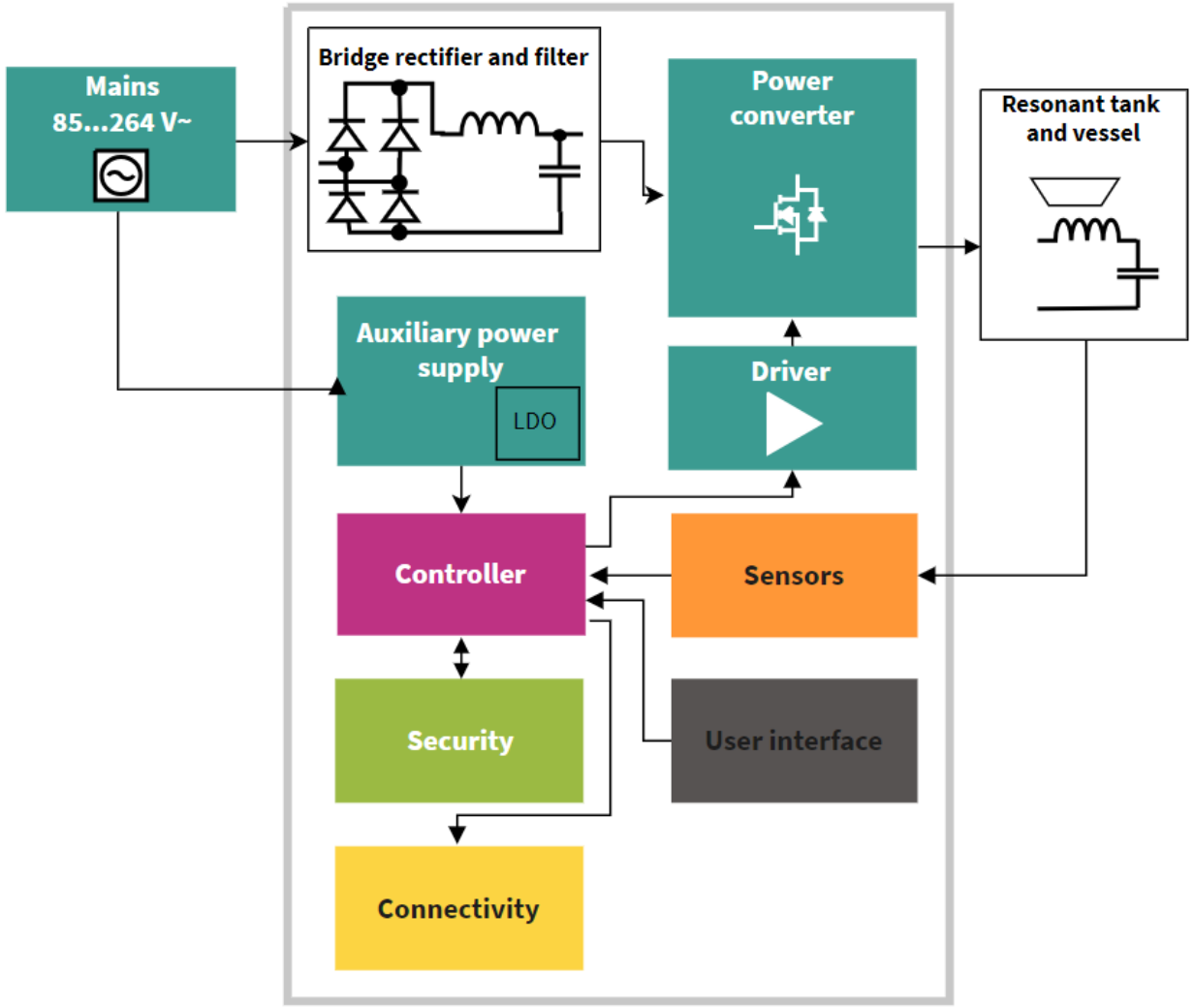

Copyright © Infineon Technologies AG 2023. All rights reserved.

Reverse-conducting IGBTs selection guide for induction heating

New released in Sep. 2023

Ic nom [A]	Features	Cost effectiveness	Best-in-class performance			Better price performance trade-off	Best-in-class performance
	Topology	Half bridge	Single ended				
	Family	R6	R5	R5	R5	R5L	R5
	Voltage	650 V	1100 V	1200 V	1350 V	1400 V	1600 V
15 A							
20 A				IHW20N120R5	IHW20N135R5	IHW20N140R5L	
25 A						IHW25N140R5L	
30 A		IHW30N65R6	IHW30N110R5	IHW30N120R5	IHW30N135R5	IHW30N140R5L	IHW30N160R5
40 A		IHW40N65R6		IHW40N120R5	IHW40N135R5	IHW40N140R5L	
50 A		IHW50N65R6					
Package		TO-247-3	TO-247-3	TO-247-3	TO-247-3	TO-247-3	TO-247-3
Recommended Driver IC		1ED44175N01B 1ED44171N01B	2ED21844S06J	1ED44175N01B 1ED44171N01B	1ED44175N01B 1ED44171N01B	1ED44175N01B 1ED44171N01B	1ED44175N01B 1ED44171N01B

Note: 40 A 650 V IGBT available in Advanced Isolation package (P/N: IHFW40N65R5S)

Copyright © Infineon Technologies AG 2023. All rights reserved.

Quasi-resonant converter

L=300-400 µH
C=3-5 µF
No need for PFC

Typ. switching frequency range: 20 to 40 kHz

Single-output low-side gate driver

>1200 V IGBT used due to voltage resonance

Typically limited to 2.5 kW due to voltage on IGBT

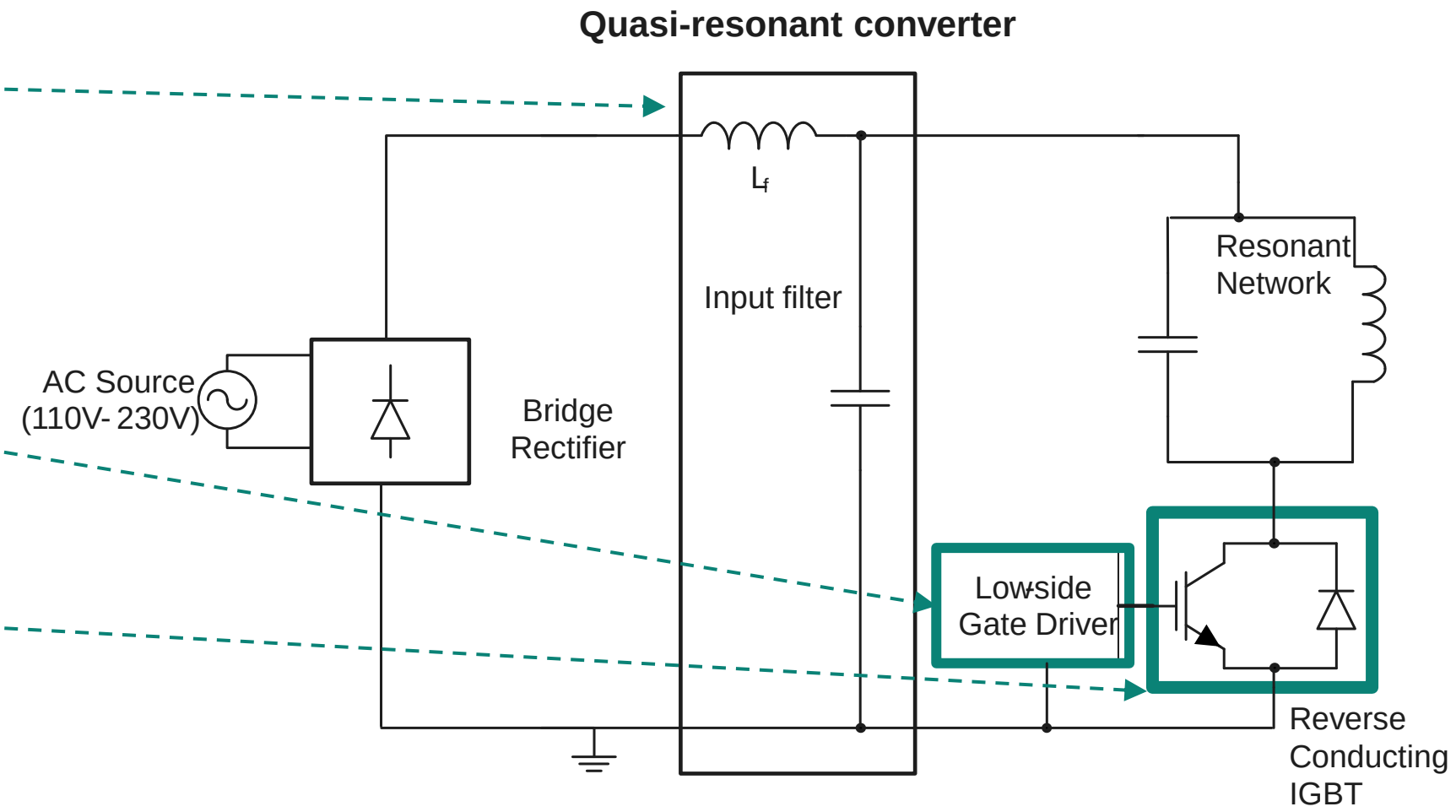

Copyright © Infineon Technologies AG 2023. All rights reserved.

Focus product: 1400 V Reverse-Conducting R5L IGBT family for soft switching applications



Key features 1400 V R5L IGBT family		Key value
Reduced system cost	Product cost optimization with optimal thermal performance requiring fewer cooling efforts	**Better price performance trade-off** for consumer market
High efficiency	Improved IGBT and Diode performance for lower conduction losses	**Smallest power losses** in the application condition
Robustness	Reduced diode forwarded voltage and improved chip-to-mold compound interface	**Less resistive cookware**
Ease of design	Simple drop-in replacement for single-ended inductive heating application	**Easy parallel operation**
Reliability and stability	Tighter parameter distribution Higher breakdown voltage and peak collector current capability	**Reliable operation with precise control**

Copyright © Infineon Technologies AG 2023. All rights reserved.

Focus product: Reverse-Conducting R5 IGBT family for soft switching applications



Key features R5 IGBT family		Key value
Cost optimization	Single chip solution for resonant converters based on Infineon TRENCHSTOP™ IGBT technology	**Cost optimized solution for** consumer market
High performances	Low conduction and switching losses	**Maximize system output** power and reduce cooling design effort
Robust EMC behavior	Soft turn-off switching for improved EMI performances	Ease to comply to **EMC standards**
Compatibility and ease of re-use	Plug-n-play solution for all resonant converter targeting inductive cooking application	**Re-use of same PCB layout and Bill-of-Material**
High reliability	Very tight parameter distribution High ruggedness and stable temperature behavior	**Reliable operation** at all temperature ranges

Copyright © Infineon Technologies AG 2023. All rights reserved.

Quasi-resonant converter internal comparison: How to select between new R5L IGBT and previous generation RC-H5 IGBT?

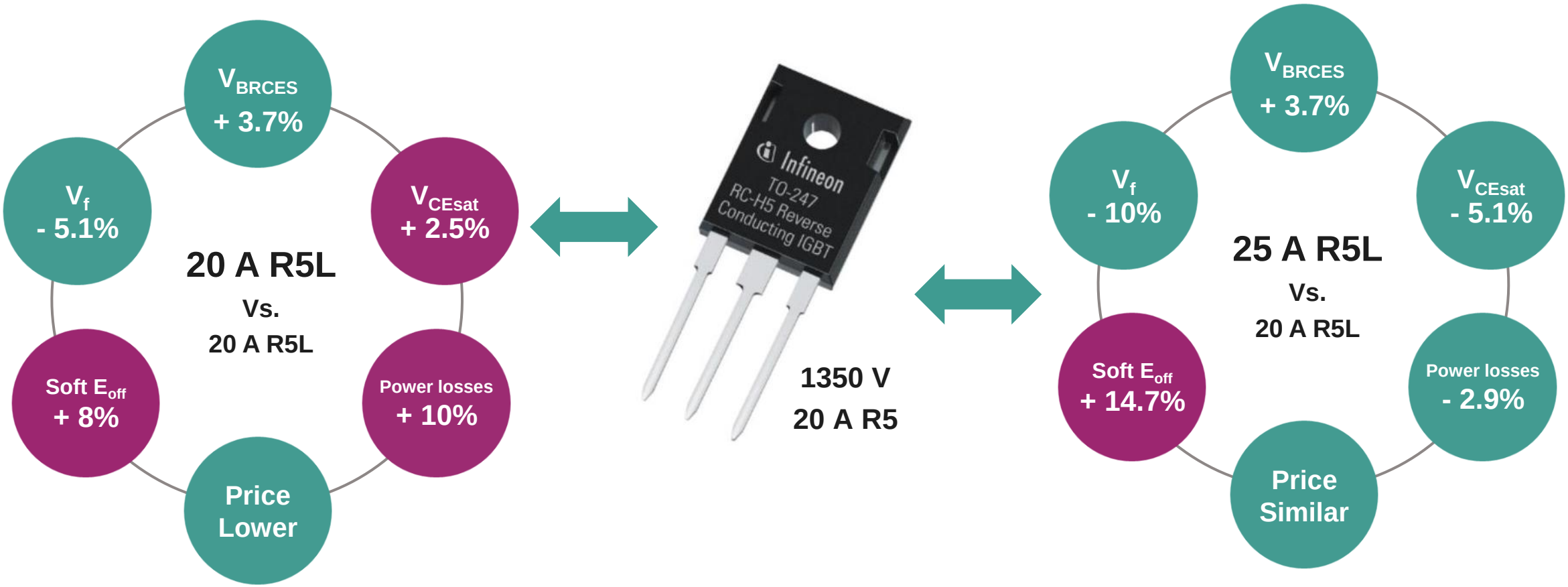

Cost-effectiveness

Better price-performance

Copyright © Infineon Technologies AG 2023. All rights reserved.

Focus product: EiceDRIVER™
25 V low-side gate drivers in home appliances



	Key features	Key value
Integrated protection features	The new 1ED44175N01B & 1ED44173N01B low-side gate drivers integrate a fast and accurate (+/-5%) over-current protection (OCP) feature, fault reporting, and enable function in a tiny SOT23 package	**Up to 50% space savings & 20% cost savings** compared to a discrete OCP solution
Easy-to-use options	Simple, single-channel, low-cost options available such as 1ED44171N01B and IRS44273L	Fast **time to market** Dual sourcing capability
Market proven	Early generation products such as IR4427S & IRS4427S historically used in high-volume production for home appliances such as residential air conditioners	**Proven track record** and access to decades of system and technology expertise
Wide supply voltage range	25 V maximum supply voltage (VCC Max)	More **robust** against VCC spikes in harsh circuit applications
Compatibility	Under-voltage lock out (UVLO) level options specific for IGBTs and MOSFETS	**Eliminates switching loss** at low VCC supply voltage

Copyright © Infineon Technologies AG 2023. All rights reserved.

Infineon offers second source enablement

- 1ED44171N01B and IRS44273L use different front-end and back-end sites allowing second-source enablement.
- Quick and easy supply flexibility by qualifying both products
- Minor layout modification needed because of the different pin-outs. Single layout (compatible with two parts) in the same design is possible, see below
- The gate resistors need to be modified because of the different drive capability.

IRS44273L, No installation R1/R3/C2, R2/C1 (input RC filter) is recommended for better input noise immunity.

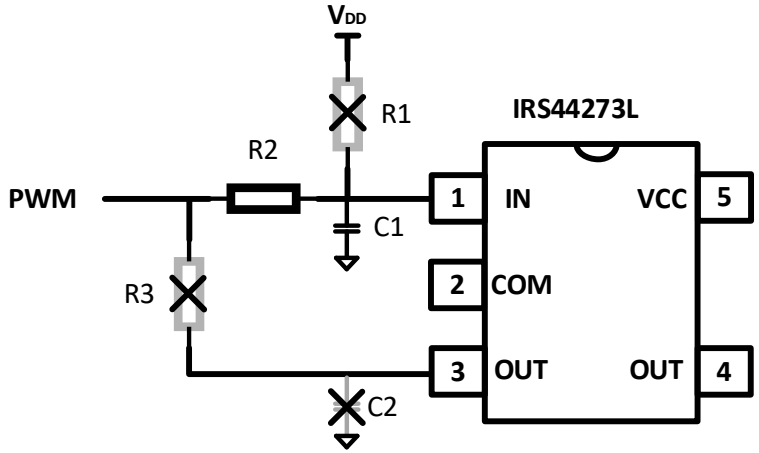

1ED44171N01B, No installation R2, R3/C2 (input RC filter) is recommended for better input noise immunity. R1/C1 is used for fault clear time program.

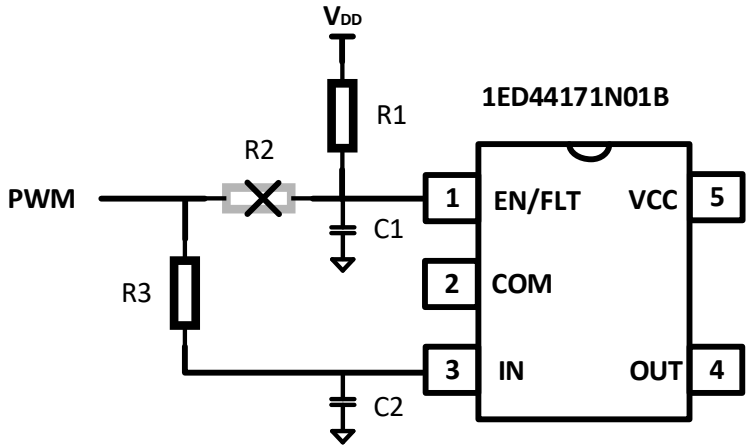

Copyright © Infineon Technologies AG 2023. All rights reserved.

Quasi-resonant converters in induction cooking: Discrete bipolar gate driver → CMOS gate driver

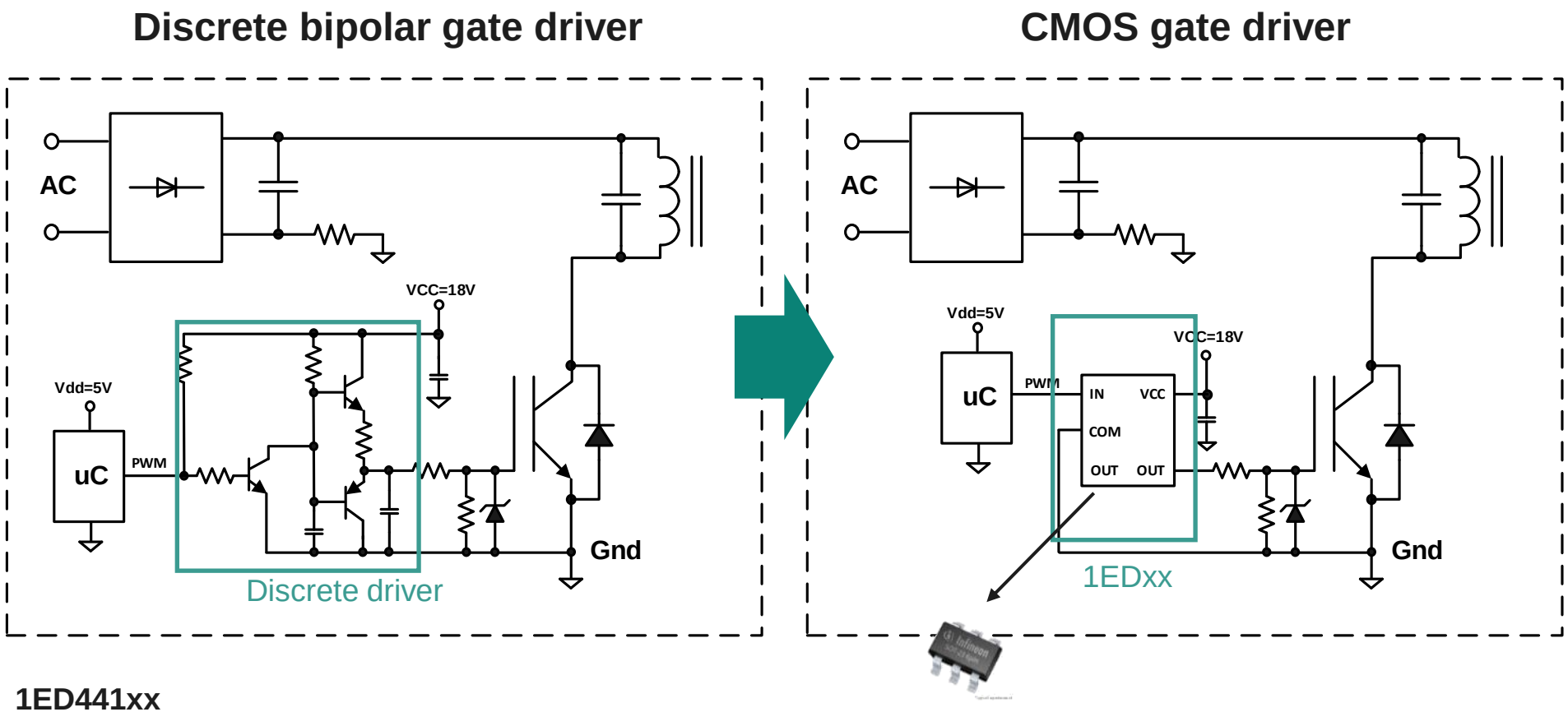

1ED441xx

- **Under voltage lockout** (not feasible with discrete solution)
- **High integration level**
- "Voltage driven" (High impedance for "IN" pin) for CMOS and **smaller power loss**
- **Reliable**

Copyright © Infineon Technologies AG 2023. All rights reserved.

Why should you change from a discrete bipolar gate driver to a CMOS gate driver IC

Key features	Bipolar discrete	CMOS IC	Value (Bipolar discrete → CMOS IC)
Under-voltage lock out protection	NO	YES	Reduces the switch loss at low Vcc supply voltage
Gate drive	"Current"	"Voltage"	Reduce the loss
Shoot-through risk	YES	NO	Reduce the loss
PCB size	Big	Small	Increase the power density

Copyright © Infineon Technologies AG 2023. All rights reserved.

Half-bridge series-resonant converter

L=300-400 µH
C=3-5 µF
No need of PFC

typ. switching frequency range: 25 to 75 kHz

Half-Bridge driver or high- and low-side drivers

650 V IGBT are used (typ. bus voltage up to 400 V due to grid fluctuation)

Typically, up to 3 kW (with 40 A IGBTs)

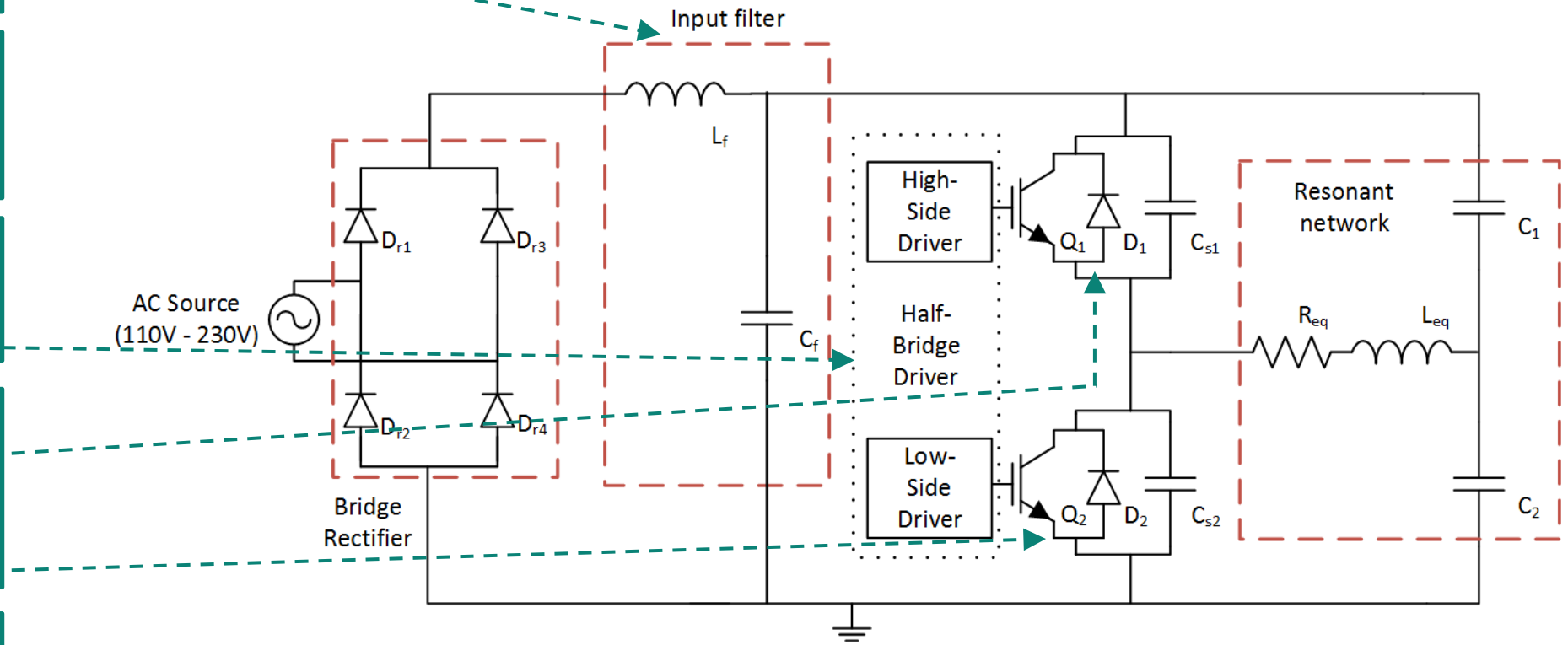

Copyright © Infineon Technologies AG 2023. All rights reserved.

Focus product: 650 V Reverse-Conducting R6 IGBT family for soft switching applications



	Key features 650 V R6 IGBT	Key value
Cost optimization	Single chip solution for resonant converters based on Infineon 650 V TRENCHSTOP™ 5 IGBT technology	**Cost optimized solution for** consumer market
High performances	Low conduction and switching losses RC-diode optimized for lowest conduction losses	**Maximize system output power** and reduce cooling design effort
Robust EMC behavior	Soft turn-off switching for improved EMI performances	Ease to comply to **EMC standards**
Compatibility and ease of re-use	Plug-n-play solution for all half-bridge series resonant converter targeting inductive cooking application	**Re-use of same PCB layout and Bill-of-Material**
High reliability	Very tight parameter distribution High ruggedness and stable temperature behavior	**Reliable operation** at all temperature ranges

Copyright © Infineon Technologies AG 2023. All rights reserved.

Focus product: SOI 650 V EiceDRIVER™ family with best-in-class performance and benefits in cost and design flexibility



Key features 2ED21xxxxx gate driver ICs		Key value
Robustness and Reliability	Operating voltages up to +650 V Superior negative VS transient voltage immunity of 100 V	Enables highly reliable and robust systems
Cost optimization	Ultra-fast reverse recovery and low R_{ON} integrated boot strap diode	Enables smaller form factors and reduced system BOM cost
Performance	Reduced level-shift losses and reduced parasitics in high frequency applications	Improved efficiency and lower operating temperature
Ease of use	Integrated protection features (UVLO, shoot through prevention logic), superior latch-up immunity and robust input and supply pins enable higher tolerance to variation in design and application conditions	Faster time to market
Multiple performance options	Variety of configurations (high and low side, half bridge), output currents (Io+/- 0.3 A/0.7 A, 2.5 A/2.5 A) and package options available (DSO-8, DSO-14, DSO-16)	Easy to select gate driver for best price and performance

Copyright © Infineon Technologies AG 2023. All rights reserved.

Infineon offering for induction cookers







Energy efficiency

Inverterization

Smart home

System control	Sensors	Power control	Power Converter	Condition monitoring	Connectivity	Security	User interface
– PSoC™ 4 and PSoC™ 6 MCUs – XMC™	– XENSIV™ magnetic hall sensors for angle / position / 3D sensing	– XMC™ 1000 series – XMC™ 4000 series – PSoC™ 4 MCU	– New Generation 1400 V Reverse Conducting R5L IGBTs – RC-H5 Reverse Conducting IGBTs – EiceDRIVER™ gate drivers	– Sensor fusion reference solution with cloud connectivity	– Wi-Fi and Bluetooth® combo controller	– Secured communication / secured host firmware update / Secured storage OPTIGA™ Trust M	– Touch UI – CapSense® Capacitive-Sensing UI – MagSense™ Inductive-Sensing UI – Touch UI incl. TFT – Wireless voice remote

Auxiliary power supply
– AC-DC Integrated Power Stage - CoolSET™

Copyright © Infineon Technologies AG 2023. All rights reserved.

More info

Application page

Application note




Infineon