

Infineon’s comprehensive solution offering for solar central inverter

August 2022

Table of contents

1 Market overview and application trends 3

2 Highlight products 12

3 Summary 23

Copyright © Infineon Technologies AG 2022. All rights reserved.

Table of contents

1 Market overview and application trends 3

2 Highlight products 12

3 Summary 23

Copyright © Infineon Technologies AG 2022. All rights reserved.

Business model for solar energy generation is divided into centralized and decentralized energy generation

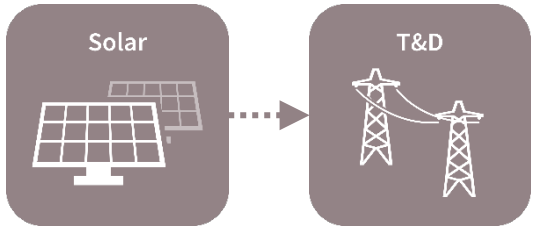

Centralized energy generation
e.g. Utility scale, Commercial

Energy is produced by a few bigger power plants (> 100 MW) distant apart from demand center

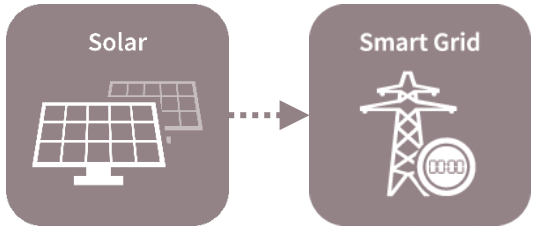

Decentralized energy generation
e.g. residential, commercial

Energy is produced by a number of smaller power plants (< 10 MW) close to where it is used

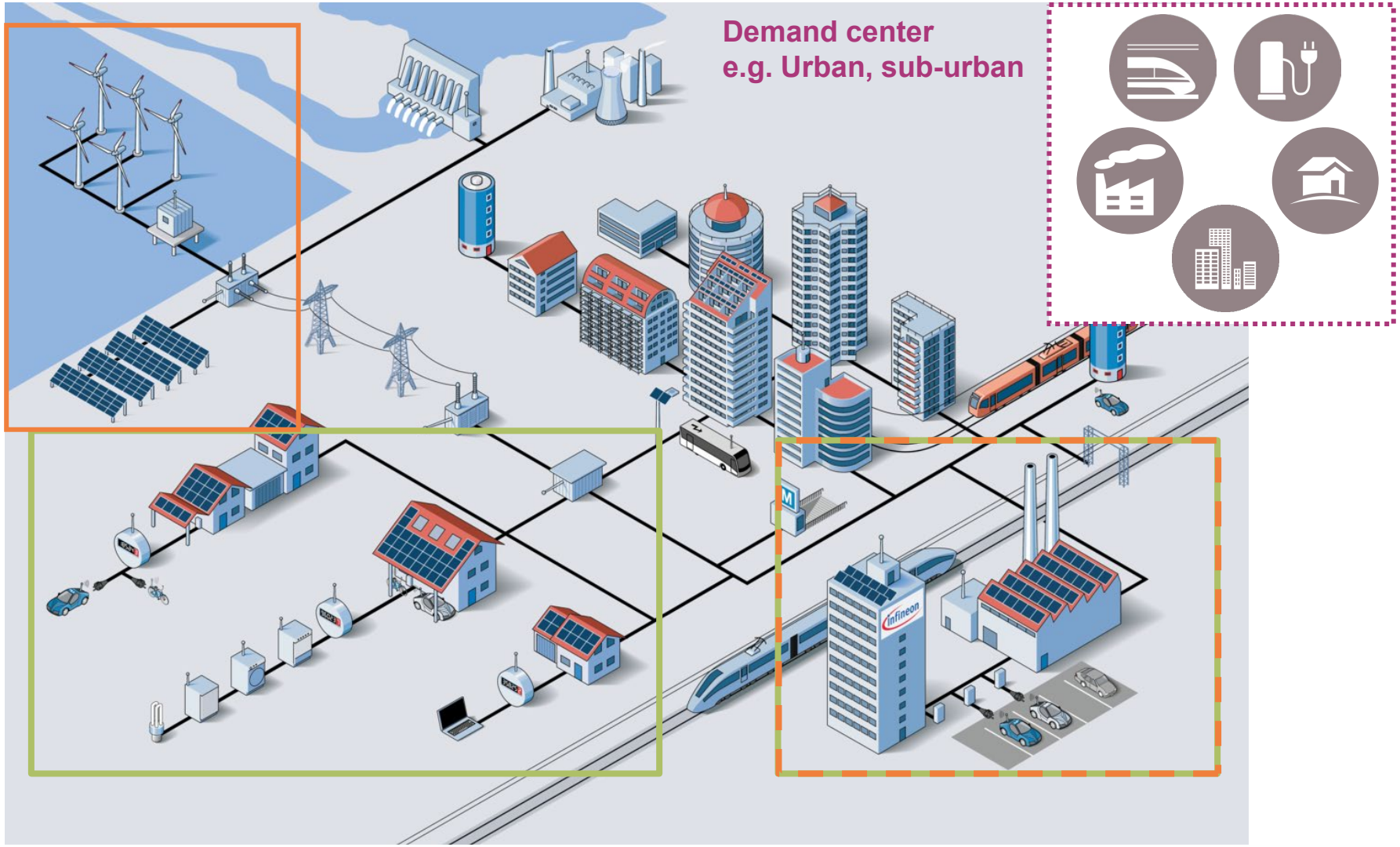

Copyright © Infineon Technologies AG 2022. All rights reserved.

Solar market segmentation and sub applications



Decentralized energy generation close to main consumer

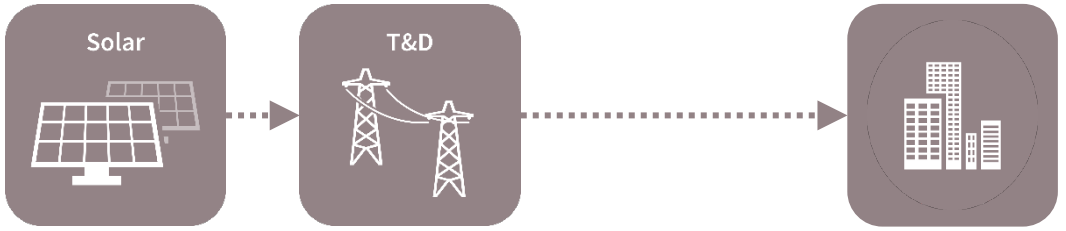

Centralized energy generation with greater distance to consumer



Residential applications

- Installed in private spaces
- **Up to 10 kW** of energy



Commercial applications

- Installed in offices and factories
- **Up to 5 MW** of energy



Utility scale applications

- Installed in the field
- **Above 5 MW** of energy

Copyright © Infineon Technologies AG 2022. All rights reserved.

Solar power generation from panel to consumption at a glance

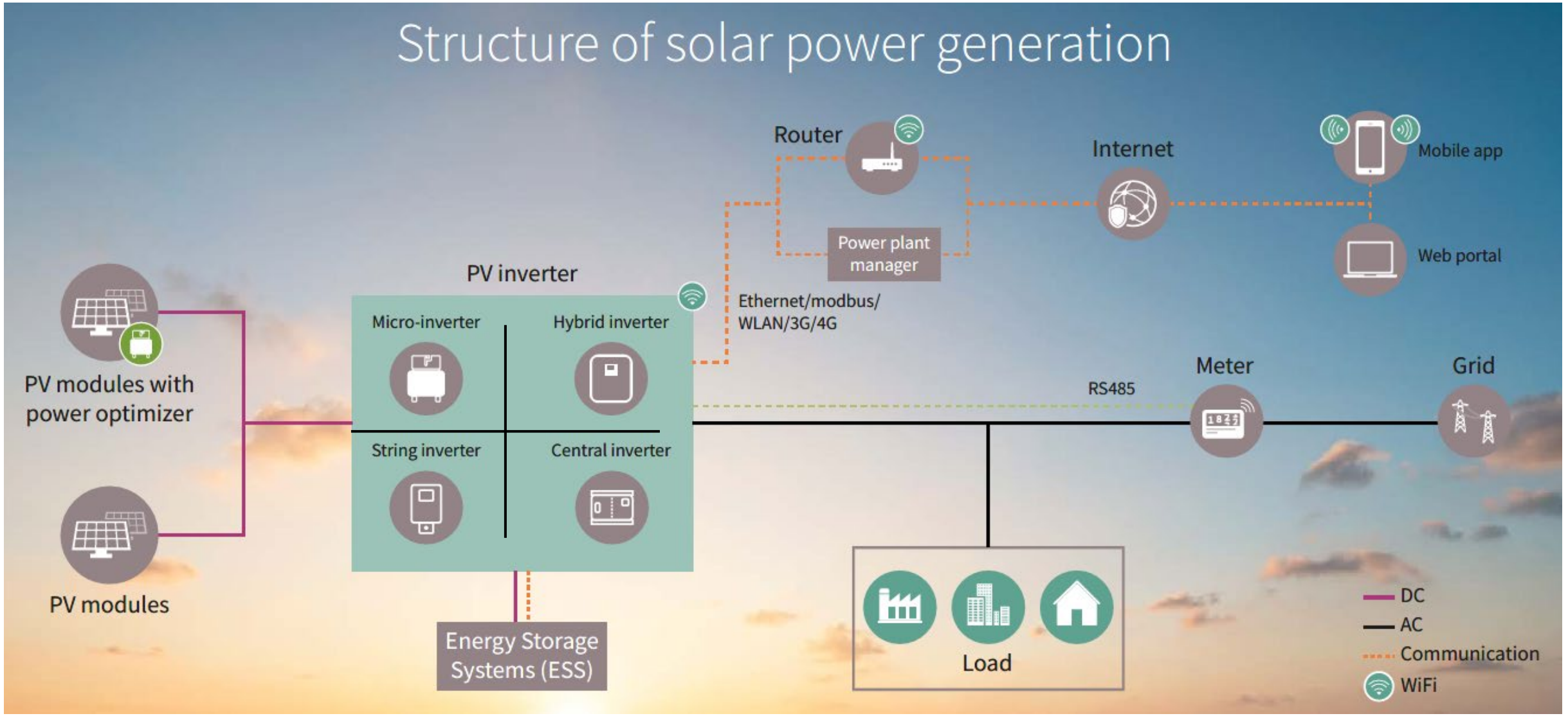

Copyright © Infineon Technologies AG 2022. All rights reserved.

Infineon portfolio as one-stop shop for solar central inverter

Central inverter

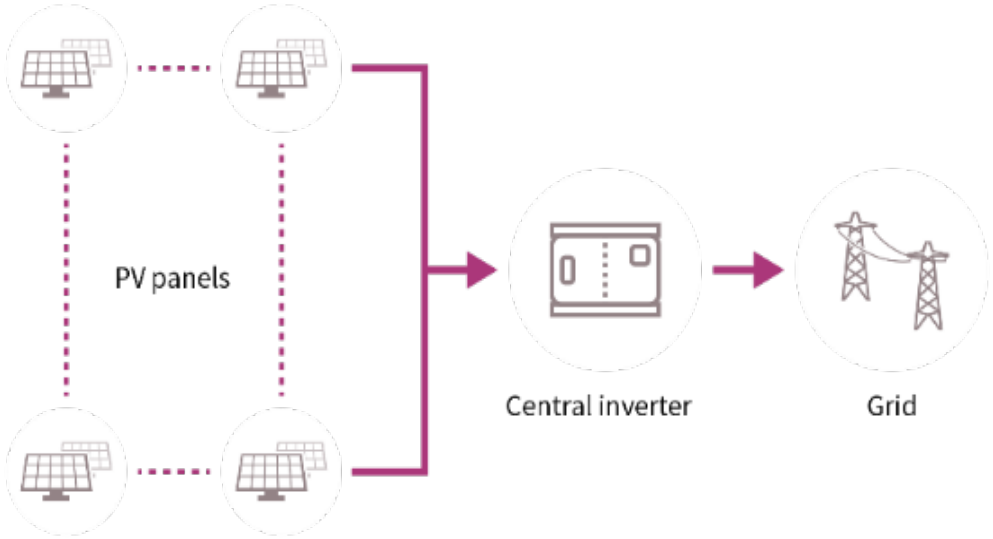

- Power conversion on multiple strings of solar panels are connected together
- Sub application: Utility scale

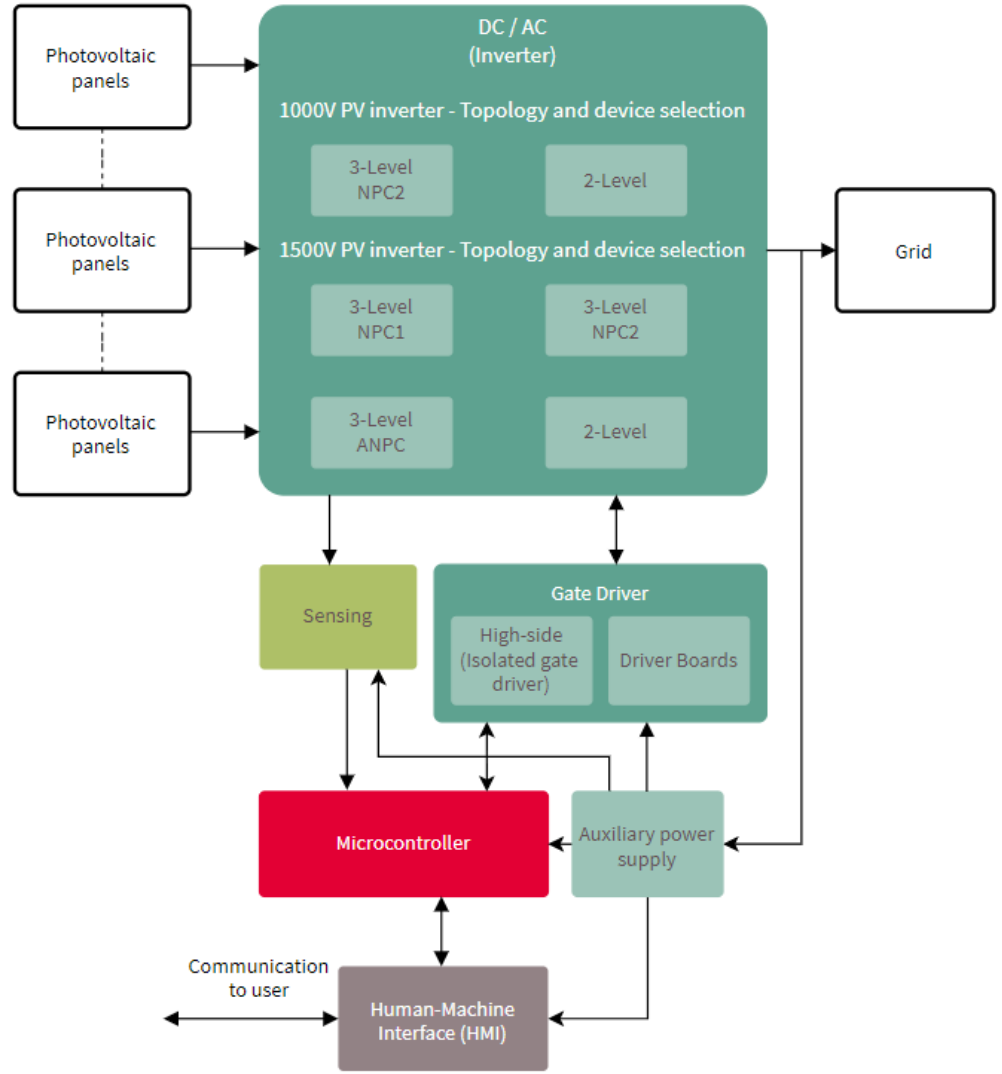

Copyright © Infineon Technologies AG 2022. All rights reserved.

Application trend for commercial and utility installations: growing trend from 1000 V PV array voltage to 1500 V PV array voltage



Infrastructure savings

Reduced installation costs

End-to-end efficiency improvements

1000 V PV system

1500 V PV system

Higher system power leads to less conductive losses due to lower currents in the same power range

Copyright © Infineon Technologies AG 2022. All rights reserved.

Application trends are supported by Infineon's comprehensive solar system portfolio

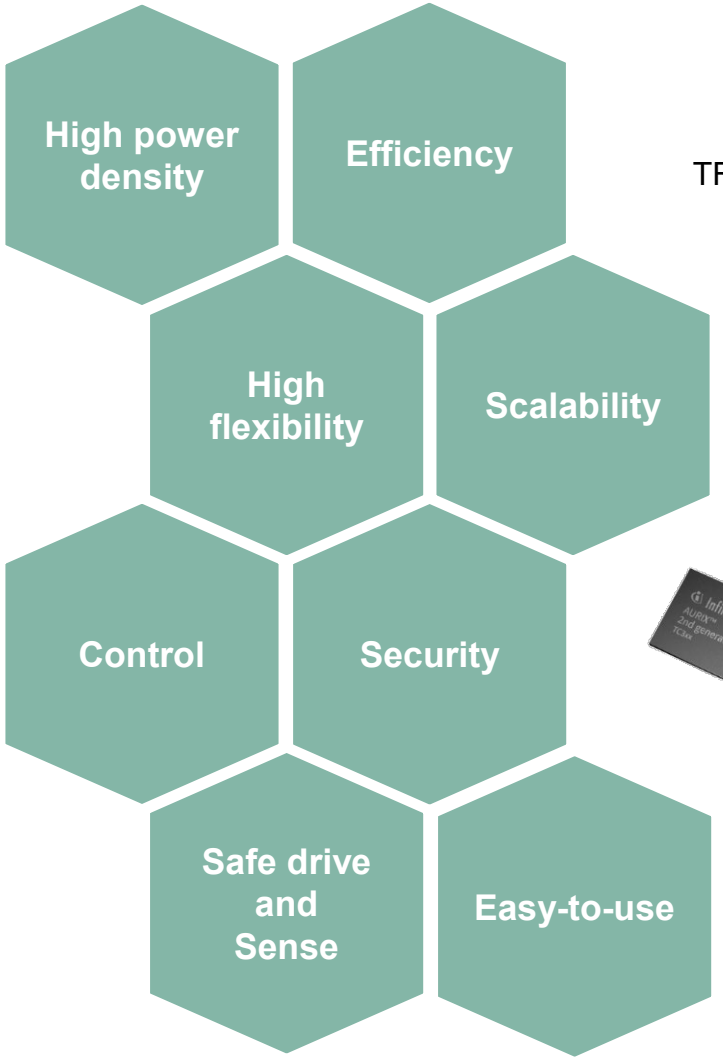

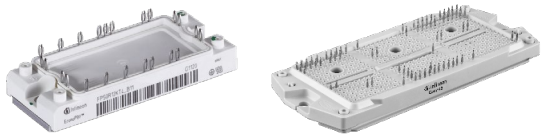

TRENCHSTOP™ IGBTs and CoolSiC™



Power modules
like Easy and Econo family



AURIX™, XMC™, OPTIGA™



EiceDRIVER™, XENSIV™

Copyright © Infineon Technologies AG 2022. All rights reserved.

Infineon portfolio as one-stop shop for solar central inverter

EiceDRIVER™
Fully isolated Gate drivers And Driver Boards



XENSIV™
TLI4971



XMC™



Photovoltaic panels

Photovoltaic panels

Photovoltaic panels

DC / AC (Inverter)

1000V PV inverter - Topology and device selection

3-Level NPC2 | 2-Level

1500V PV inverter - Topology and device selection

3-Level NPC1 | 3-Level NPC2

3-Level ANPC | 2-Level

Grid

Sensing

Gate Driver

High-side (Isolated gate driver)

Driver Boards

Microcontroller

Auxiliary power supply

Communication to user

Human-Machine Interface (HMI)

Discrete: MOSFETs & IGBTs & IGBT modules

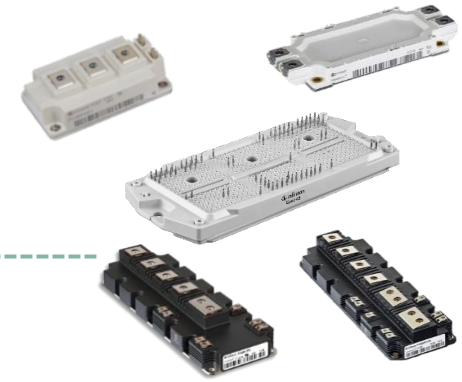

1.7 kV CoolSiC™ & CoolSET™



Copyright © Infineon Technologies AG 2022. All rights reserved.

Infineon product offerings for central inverter

DC / AC Stage

3-level NPC1	PrimePACK™ 3/3+
3-level NPC2	62 mm (Dual + Common Emitter)
3-level ANPC	EconoDUAL™ 3 PrimePACK™ 3/3+ Easy4B

62 mm



EconoDUAL 3



PrimePACK 3



PrimePACK 3+



Easy4B





Every switch needs a driver
EiceDRIVER™ – High Side (1ED) & Half Bridge (2ED), Driver Boards

Copyright © Infineon Technologies AG 2022. All rights reserved.

Table of contents

1 Market overview and application trends 3

2 Highlight products 12

3 Summary 23

Copyright © Infineon Technologies AG 2022. All rights reserved.

Infineon's comprehensive solar portfolio at a glance

Infineon's cross-divisional power solution positioning for solar string application

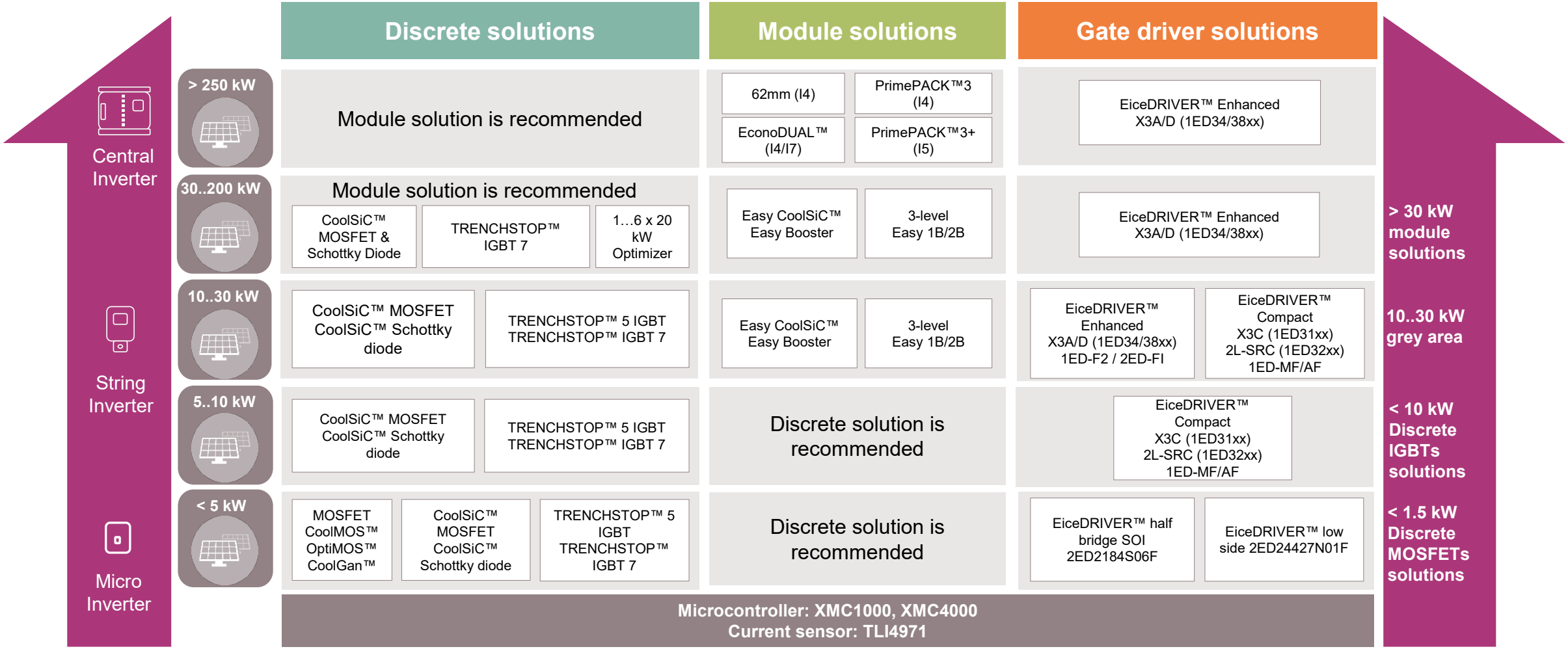

Copyright © Infineon Technologies AG 2022. All rights reserved.

EconoDUAL™ 3 with TRENCHSTOP™ IGBT7

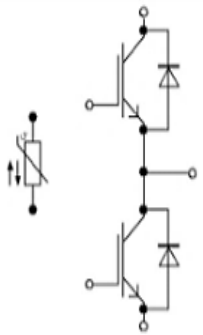

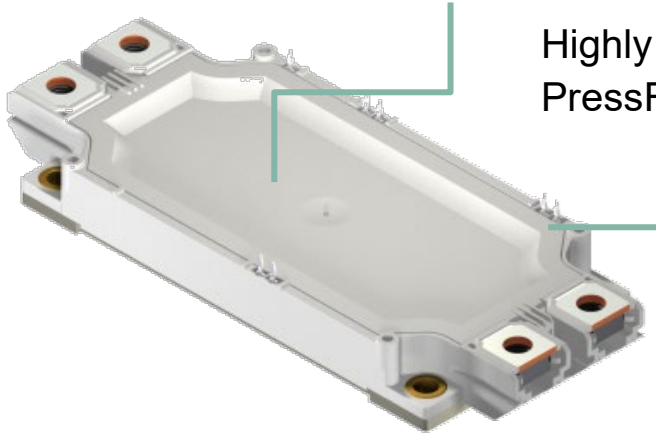

Snap connection for lid
outside of the module

Enlarged bond areas for
connection of additional wires

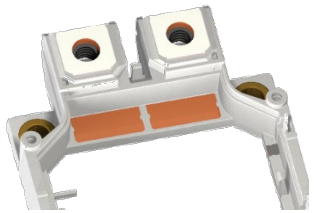

Benefits

- Best-in-class with 900 A/1200 V
- +30% inverter output current for the same frame size
- Avoidance of paralleling of IGBT modules
- Simplification of the inverter systems
- Reduced mounting effort
- Increased inter-connection reliability

Target applications


Drives


CAV/Ebus


Solar

Copyright © Infineon Technologies AG 2022. All rights reserved.

Latest Easy4B package enables a single module solution for > 300 kW 1500 V solar central inverter

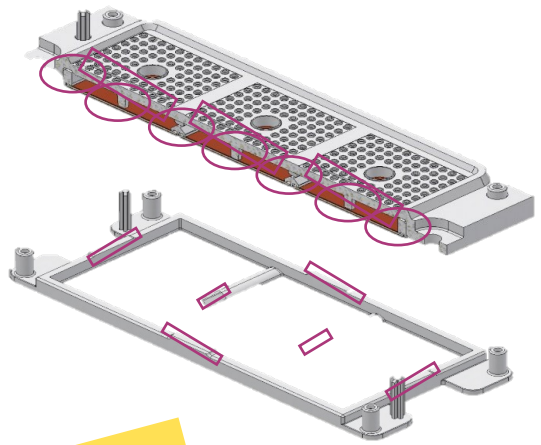

+SiC

Benefits

Equally distributed forces
Six areas for an equally sharing

Three bow compensators
Force transfer due to outer frame

Spring effect
To guarantee a defined pressing force after mounting

High pressing force
Forces applied after mounting

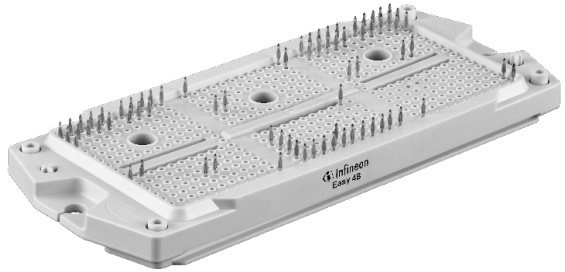

Lead Type

F3L600R10W4S7F_B11

Solar

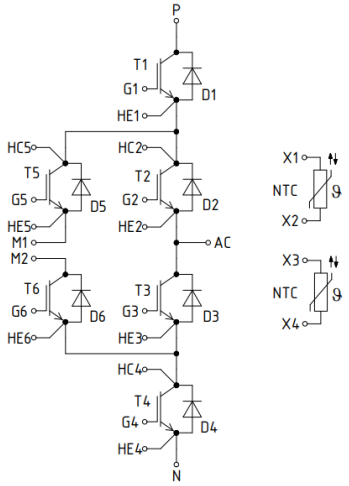

Device	BOM
T1/T4	600 A S7
T2/T3	400 A L7
T5/T6	400 A S7
D1/D2/D3/D4	300 A Rapid
D5/D6	160 A SiC SBD

Key Features

- Compact concept with **standard Easy height**
- **Optimized customer development cycle** (time and cost)
- Flexible configuration
- **High power density**
- **Integrated temperature sensor** available (NTC)
- **Low stray inductance** module design

Easy 4B module outline matches perfectly to our existing Easy family and extends its power rating range with similar package design

Copyright © Infineon Technologies AG 2022. All rights reserved.

62 mm modules for NPC 2 topologies

Due to increasing market demand for 3-level topologies, we also offer common emitter modules in our standard 62 mm package / EconoDUAL™ 3

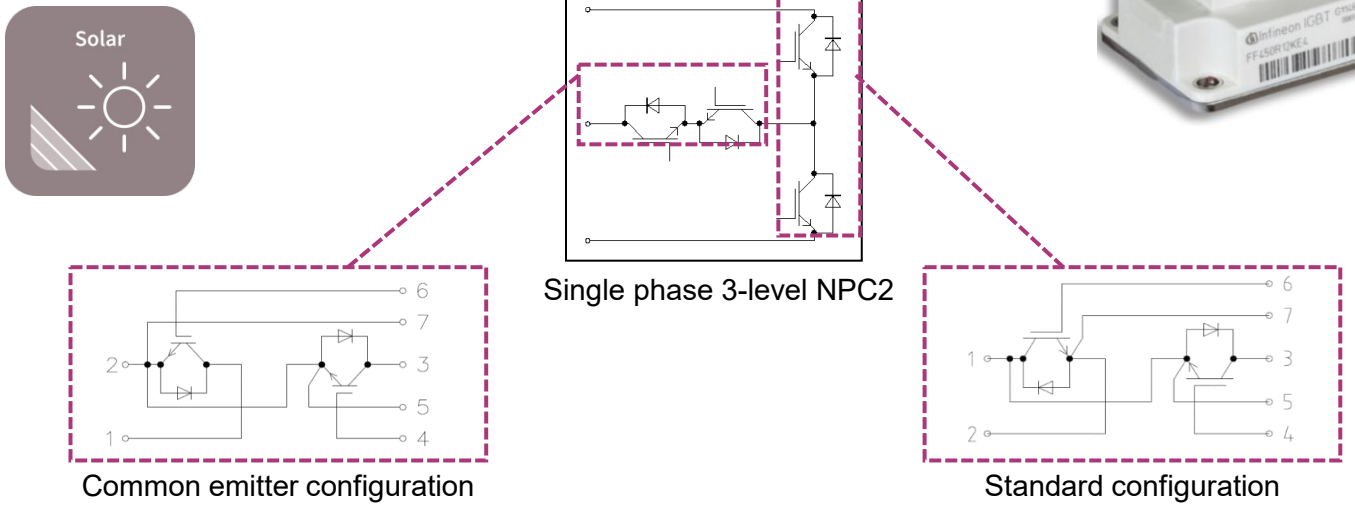



Sales Name	Package	Description
FF200R12KT3_E	62 mm	Neutral branch of NPC2, IGBT3, 1200 V, 200 A
FF300R12KT3_E	62 mm	Neutral branch of NPC2, IGBT3, 1200 V, 300 A
FF400R12KT3_E	62 mm	Neutral branch of NPC2, IGBT3, 1200 V, 400 A
FF300R12KE4_E	62 mm	Neutral branch of NPC2, IGBT4, 1200 V, 300 A
FF450R12KE4_E	62 mm	Neutral branch of NPC2, IGBT4, 1200 V, 450 A
FF600R12KE4_E	62 mm	Neutral branch of NPC2, IGBT4, 1200 V, 600 A

Upcoming module portfolio

Half bridge 2-6 mOhm

- FF6MR12KM1
- FF4MR12KM1
- FF3MR12KM1
- FF2MR12KM1

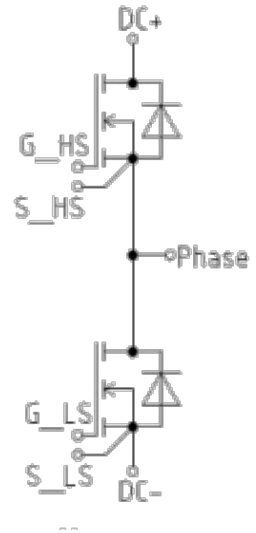

Well-known robust design

Excellent temperature distribution

Less design-in effort

Copyright © Infineon Technologies AG 2022. All rights reserved.

PrimePACK™ 3+ package with IGBT7 Chip

Housing dimensions

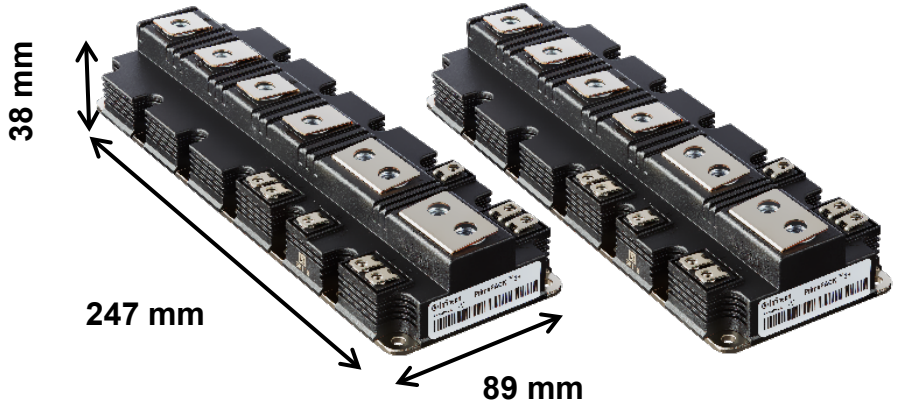

Voltage class	2.3 kV	1.2 kV
Current rating	1800 A	2400 A
Topology	**Half-Bridge**	**Common collector**
Technology	**IGBT 7 / EC 7**	**IGBT 7 / EC 7**
Type Name	**FF1800R23IE7**	**FF2400RB12IP7**

Features and technologies

- 2.3 kV application oriented voltage class with latest Gen7 technology
- 1.2 kV Gen7 technology with 2400 A to support maximum power rating in the system
- Module set in the same housing
- NPC2 optimized common collector module layout
- PrimePACK™ housing with large creepage and clearance distances

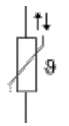

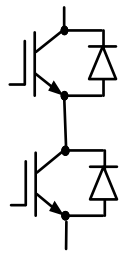

Half bridge
NTC included

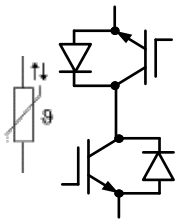

Common Collector
NTC included

Copyright © Infineon Technologies AG 2022. All rights reserved.

2-level design options

2-level topology

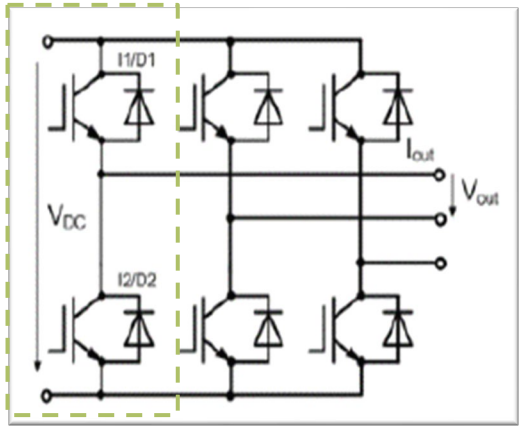

2-level two modules configuration for increased power

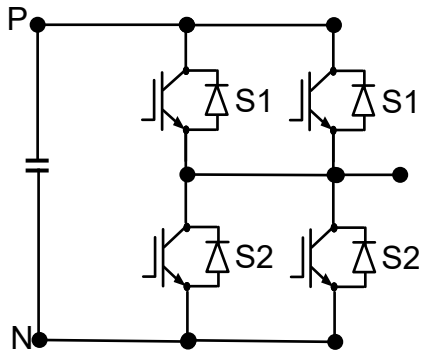

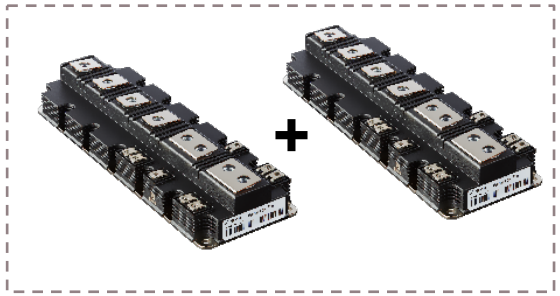

2-level three modules configuration for more increased power

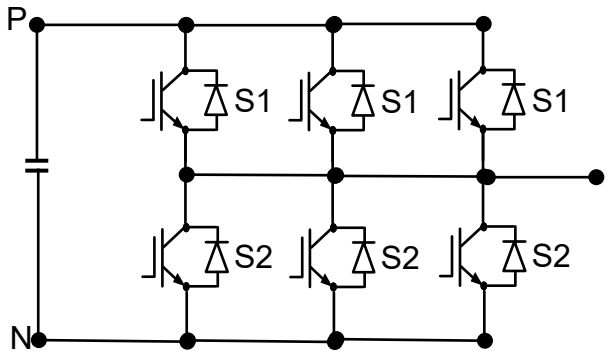

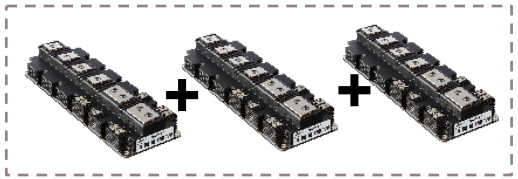

Copyright © Infineon Technologies AG 2022. All rights reserved.

3-level NPC2 design options

3-level NPC2 two modules configuration for increased power

FF2400RB12IP7 + FF1800R23IE7

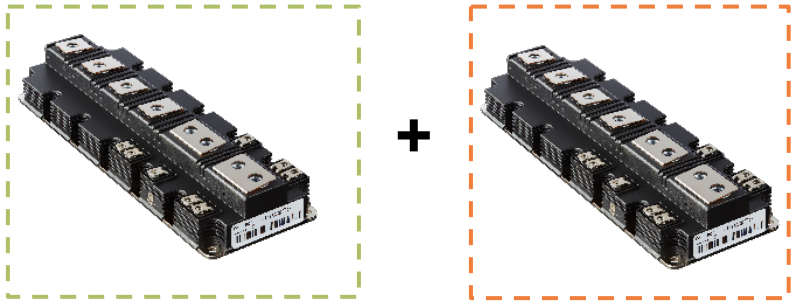

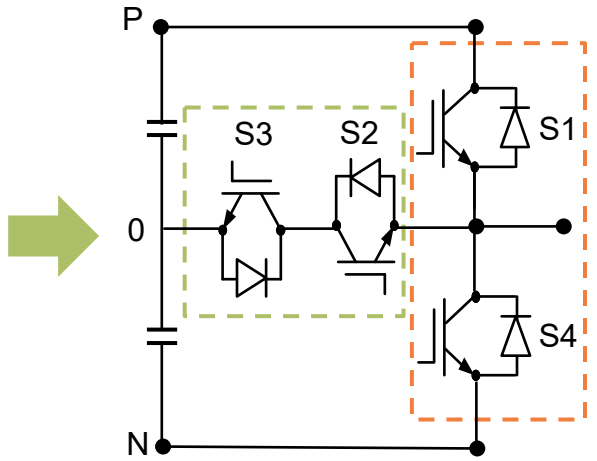

3-level NPC2 three modules configuration for more increased power

FF2400RB12IP7 + FF1800R23IE7

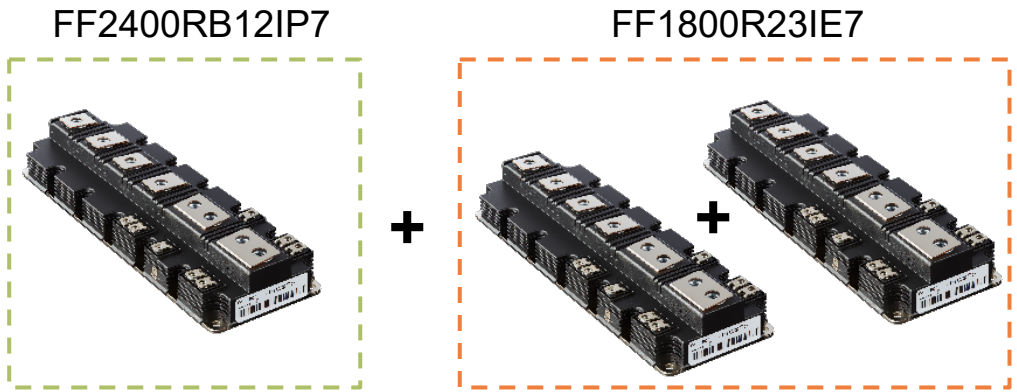

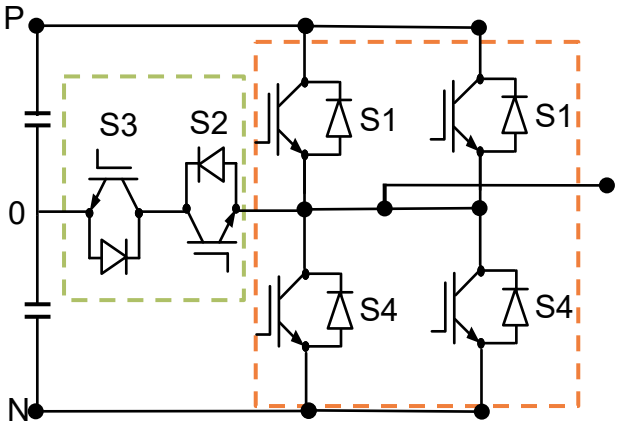

Copyright © Infineon Technologies AG 2022. All rights reserved.

Topology comparison: NPC1 vs NPC2 in PrimePACK™ 3+ package

NPC2 topology in PrimePACK™ 3+ enables 33% more output power and increased efficiency

NPC1 vs NPC2 (Output power)

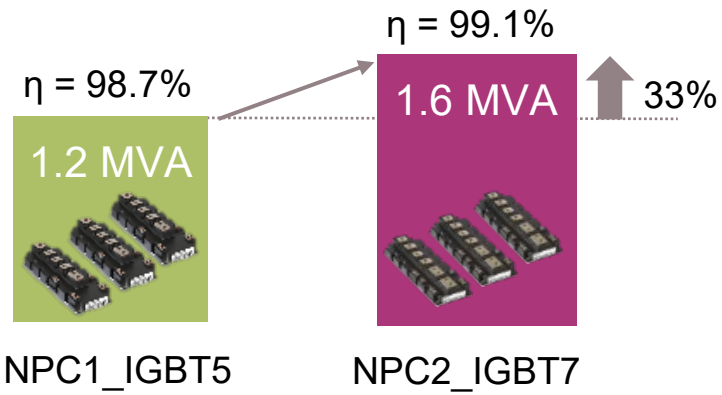

9 x FF1800R12IE5

6 x FF1800R23IE7 + 3 x FF2400RB12IP7

NPC1 vs NPC2 (Losses/leg)

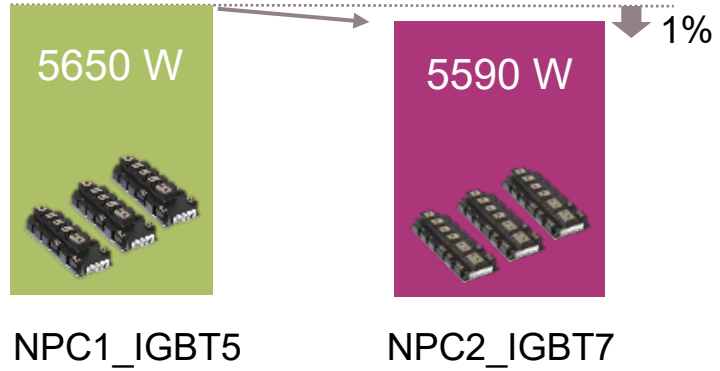

V_{DC} = 1200 V, V_{out} = 600 V, Fsw = 3.3 kHz, F_{out} = 50 Hz, PF = 1, Ta = 60 °C
R_{ths-a} = 0.009 K/W & Tvjmax = 150 °C

2300 V IGBT7 → Reach 33% higher output power → Inverter efficiency gain of 0.4%

Copyright © Infineon Technologies AG 2022. All rights reserved.

Every switch needs a driver, the right driver makes a difference
EiceDRIVER™ isolated gate driver portfolio

ED-E Enhanced

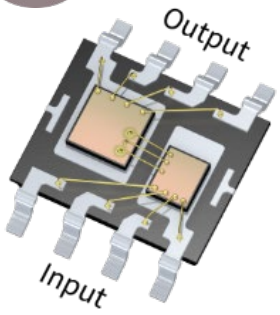

EiceDRIVER™ Enhanced

Up to 2300 V, 9 A
DESAT, Miller clamp

Rich feature-set for advanced protection:

- **F3 (1ED332x):** Cost effective solution with DESAT
- **X3 Analog (1ED34xx):** Best-in-class DESAT accuracy, Analog Configurability
- **X3 Digital (1ED38xx):** I2C configurable enabling predictive maintenance



ED-C Compact

EiceDRIVER™ Compact

Up to 2300 V, 18 A
Miller clamp, 2-level slew-rate-control

Reduced feature-set and easy to design-in:

- **X3 Compact (1ED31xx):** easy to design & cost effective
- **2L-SRC Compact (1ED32xx):** EMI & switching loss optimization



New products with Reinforced isolation (UL 1577 and VDE-11)

Copyright © Infineon Technologies AG 2022. All rights reserved.

EiceDRIVER™ Enhanced F3 (1ED332xMx12N) – Product overview

Product highlights

- Single-channel isolated gate driver with up to **6/8.5 A**
- **Active Miller clamp, DESAT, soft-off**
- CMTI > **±300 kV/µs at 1.5 kV**
- Propagation delay **85 ns typ.** (with 35 ns typ. input filter)
  - Prop. delay matching (part to part) **+/- 15 ns**
- **DSO-16 300 mil package**
  - **8 mm creepage** distance, standard 1.27 mm pitch
  - Pin-compatible to 1ED020I12-F2/B2
- Isolation capabilities & certification
  - **UL 1577 certified** V_{ISO} = 5.7 kV(rms)
  - **VDE 0884-11 certified** V_{IORM} = 1767 V(peak) **reinforced isolation**
- For IGBTs, MOSFETs, CoolSiC™/ SiC MOSFETs **up to 2300 V**
- Evaluation board available: EVAL-1ED3321MC12N



Sample schematic

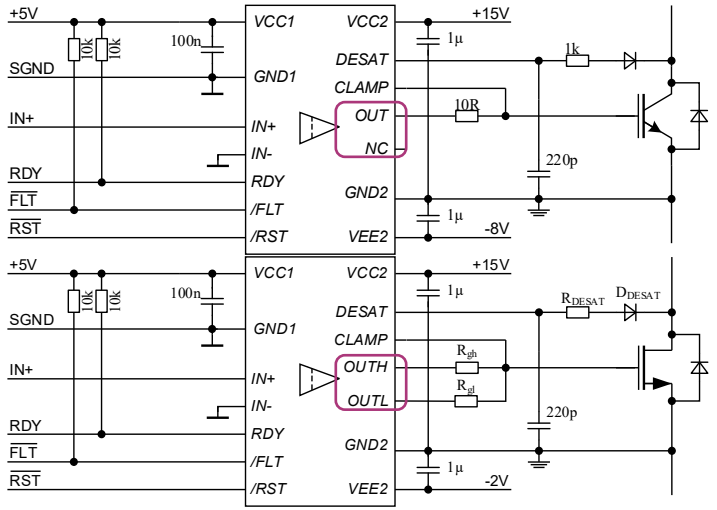

Value proposition

- **Accurate short-circuit protection (DESAT) & soft shutdown**
- **Up to 8.5 A driving capability & 40 V output supply voltage range**
- **Optimized specifications** for driving **SiC**
- Fulfilling **highest isolation standards**
  - UL1577 and VDE-11



Copyright © Infineon Technologies AG 2022. All rights reserved.

Table of contents

1 Market overview and application trends 3

2 Highlight products 12

3 Summary 23

Copyright © Infineon Technologies AG 2022. All rights reserved.

Our products meet distinctive requirements of PV: cost down, efficiency and reliability

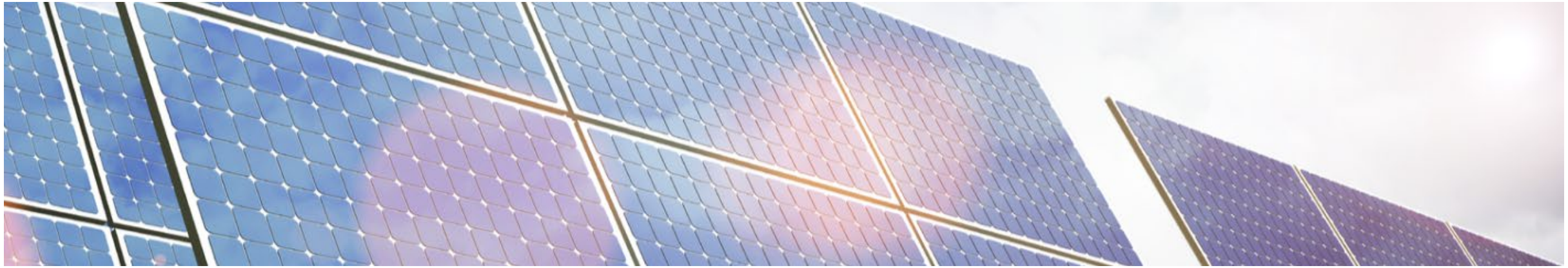

Requirements	Features	Benefits
› Highly reliable while operating under high temperatures and withstanding tough conditions › Ensure highest system efficiency at lowest overall system cost › Offer high power-density	› SiC based solutions for higher power density and switching frequency › Family of 3-level modules and complete portfolio of Drivers › Proven robustness › Offering for central, micro and string inverters › Easy and high-efficiency design	› Highly efficient power conversion › Reduced switching losses and cooling effort › Long lifetime with low down time › Reduced inverter size and weight › Reduced system and installation costs

Copyright © Infineon Technologies AG 2022. All rights reserved.

Tailor made information via myInfineon

From the infineon.com go to the registration page → Use the form to self-register (type in necessary information) → A confirmation email with the activation link is sent to you, please click on the link to activate your account → Log in to myInfineon

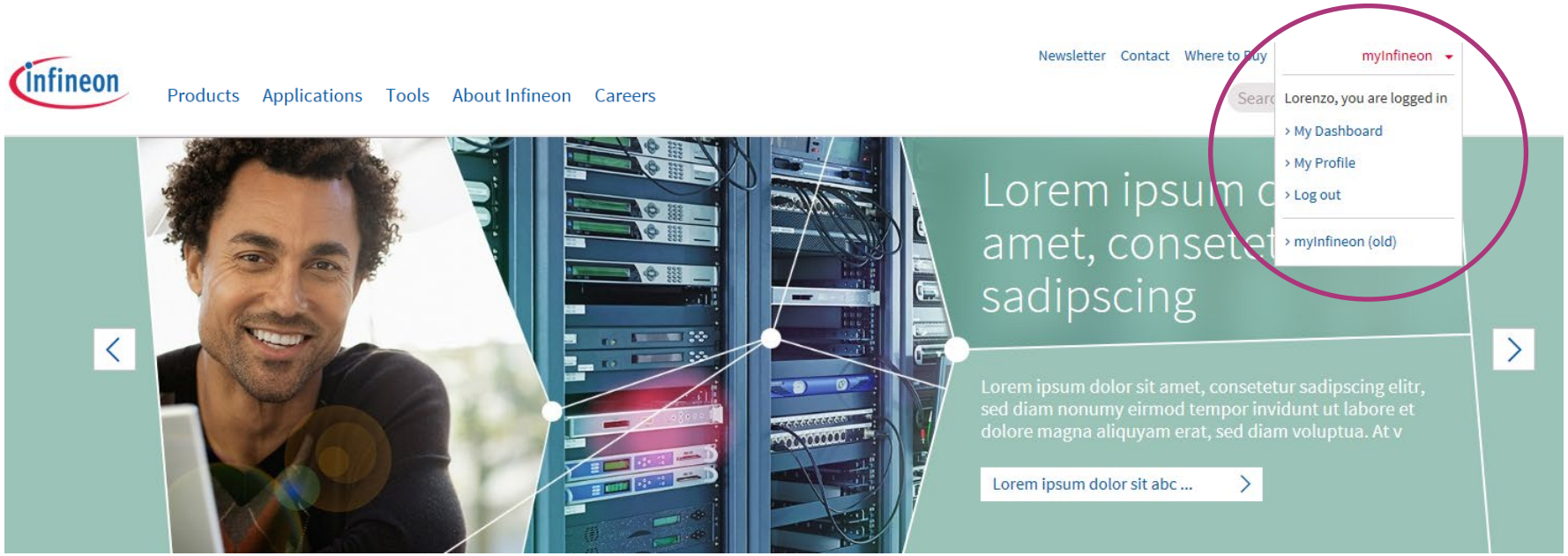

In case of problems with the access, the registration or all other type of issues, please get in touch with your Infineon contact person or with our official support at www.infineon.com/support (available 24/7)

Copyright © Infineon Technologies AG 2022. All rights reserved.



Part of your life. Part of tomorrow.