

Application and technology trends
Battery management system

November 2022

restricted

Agenda

1. Introduction and overview of Infineon offering
2. Battery protection
3. Battery monitoring and balancing

Copyright © Infineon Technologies AG 2023. All rights reserved.

Energy storage is essential for further development of renewable and decentral energy generation

Battery energy storage systems use cases

Generation

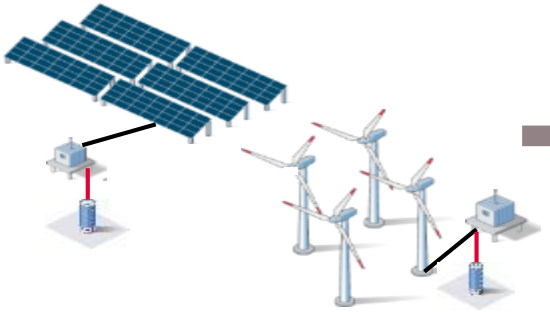

- Co-located with renewables
  - Solar
  - Wind
- Conventional power plant with **energy storage** (i.e for peak demand management and grid constrain management)

Transmission

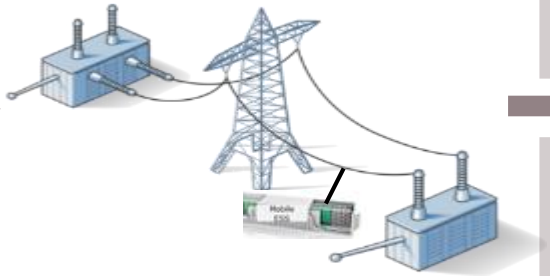

- **Energy storage for grid stabilization**
- **Standalone energy storage system** (i.e. for energy trading and peak shaving)

Consumption

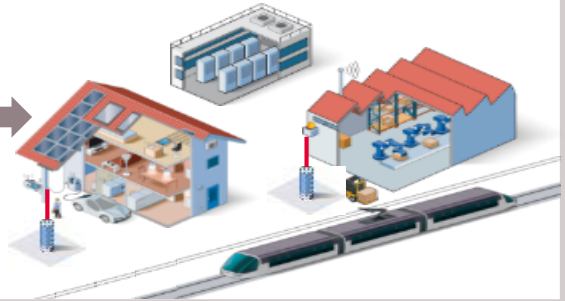

- Residential battery storage
- Commercial and industrial ESS
- Others
  - Vehicle to grid (V2G)
  - Vehicle to building (V2B)
  - UPS

Copyright © Infineon Technologies AG 2023. All rights reserved.

Why energy storage and why Li-ion batteries

- Decarbonization
- Digitalization
- Decentralization





Feature	Li-ion	Lead acid
Capacity	80%	30-50%
Life cycles	2000-5000	500-1000
Charging	fast to 100%	fast to 80%
Wasted energy	0%	15%
Size	small	large
Weight	light	heavy
Density	high	low

Copyright © Infineon Technologies AG 2023. All rights reserved.

Battery management system in ESS applications

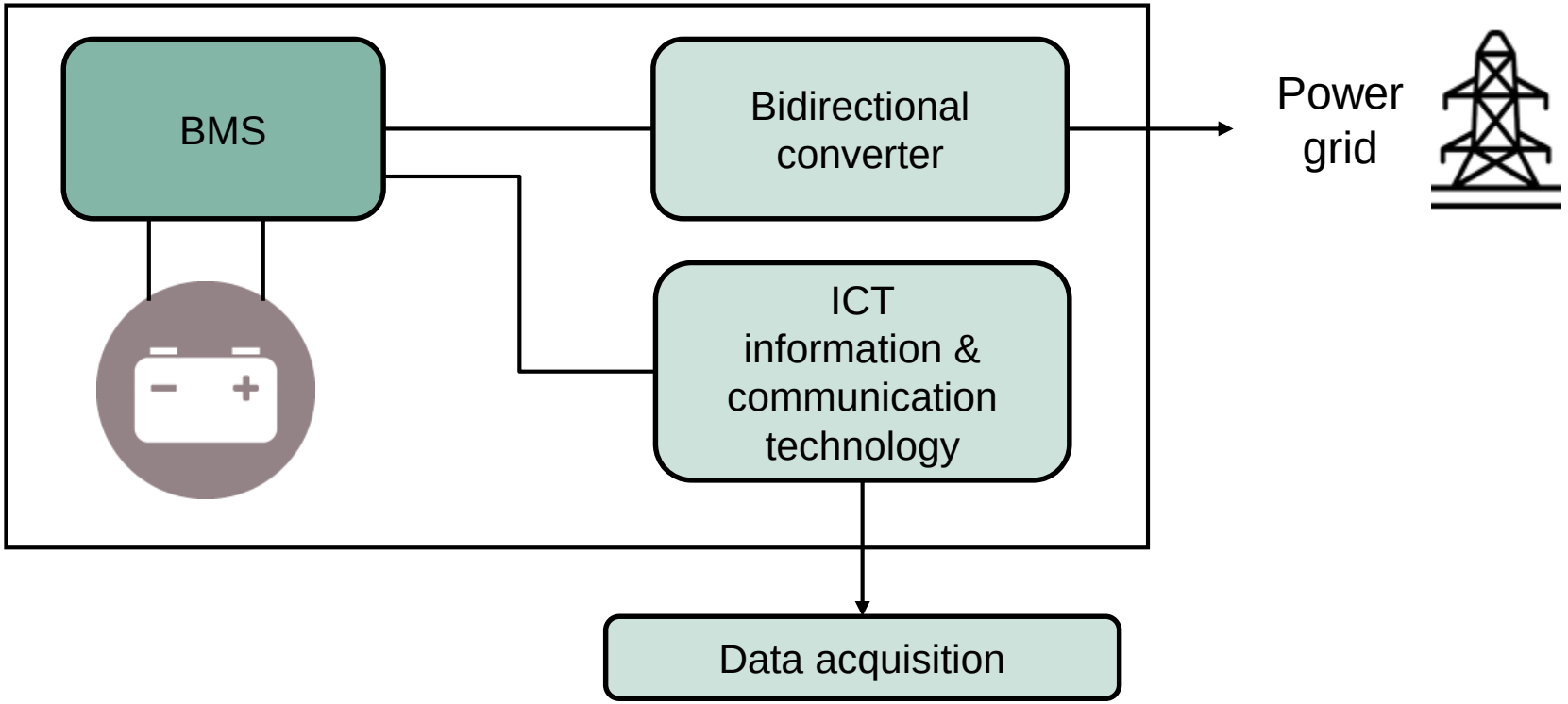

Copyright © Infineon Technologies AG 2023. All rights reserved.

Key portfolio for energy storage systems

Discrete and modules
MOSFET / SiC / IGBT



EiceDRIVER™



XENSIV™



CoolSET™



Monitoring and balancing IC



Protection FETs



XMC™



OPTIGA™



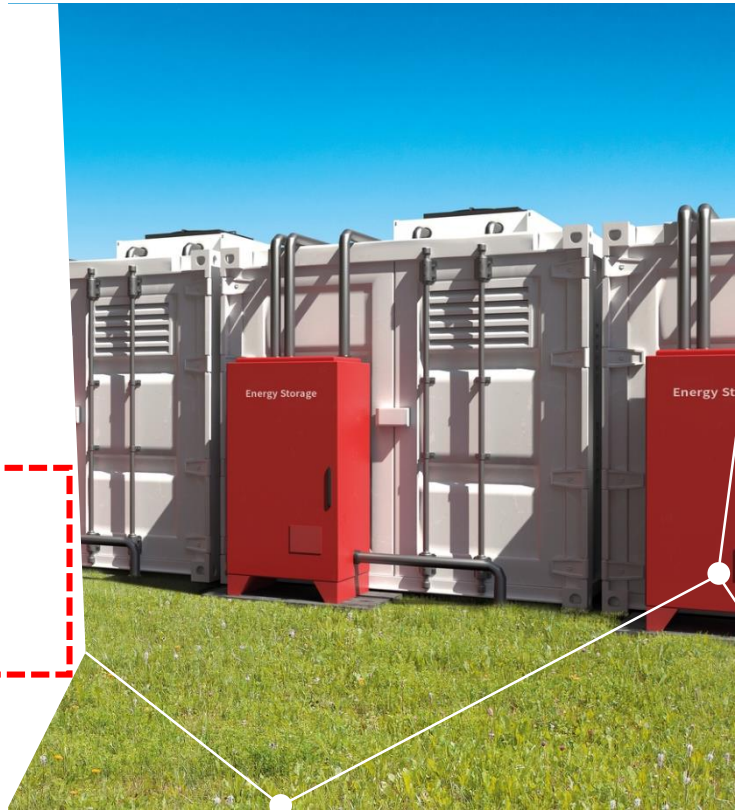

Copyright © Infineon Technologies AG 2023. All rights reserved.

Battery management systems

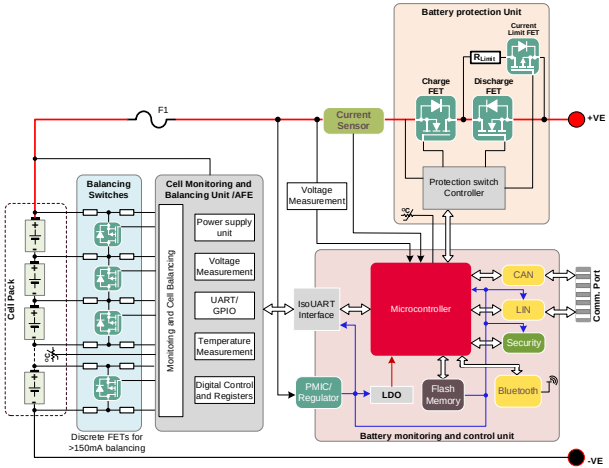

Key functionalities

- **Protection**
- **Performance optimization**
- **Battery state calculation**

BMS functions

Battery protection				Cell monitoring and balancing (CMB)			
Over charge/ Deep discharge	Inrush current	Short circuit	Thermal management	Cell voltage monitoring & balancing	Temperature monitoring	Battery pack Voltage monitoring	Current monitoring

Battery monitoring and control (BMC)				Security		Logging	Regulators		Communication	
Fuel gauging	SOH	SOC	Inter-communication	Authentication	Encryption	Data storage	Voltage regulators	PMICs	Wired	Wireless

Copyright © Infineon Technologies AG 2023. All rights reserved.

Battery management systems

Every Li-ion battery needs a “battery management system”

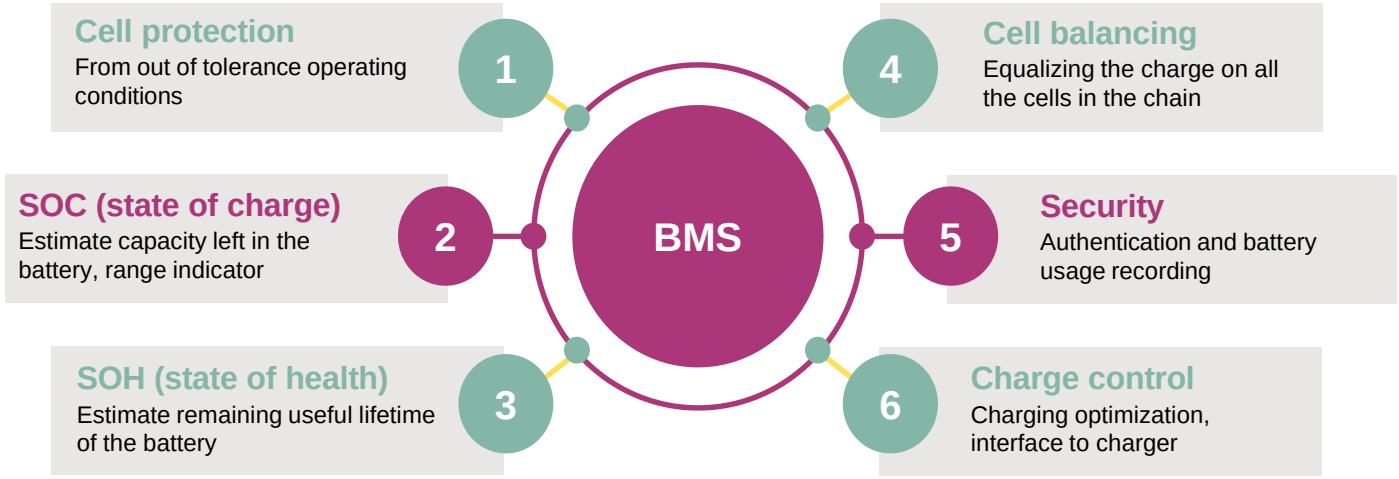

Copyright © Infineon Technologies AG 2023. All rights reserved.

BMS architecture

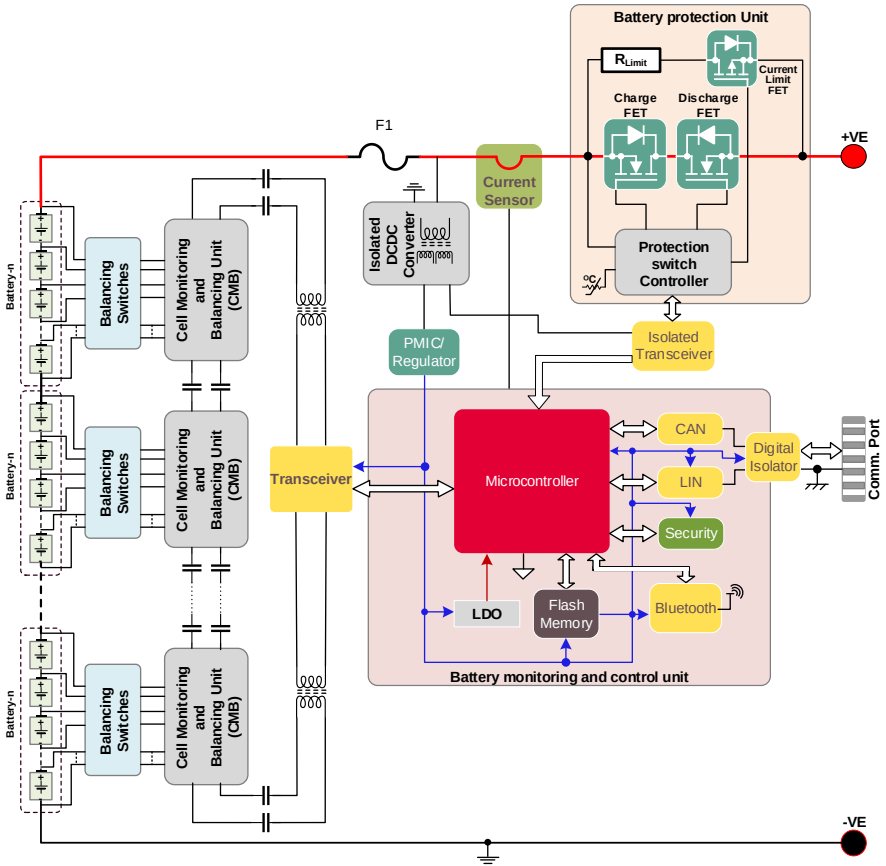

Copyright © Infineon Technologies AG 2023. All rights reserved.

Offering for modular BMS

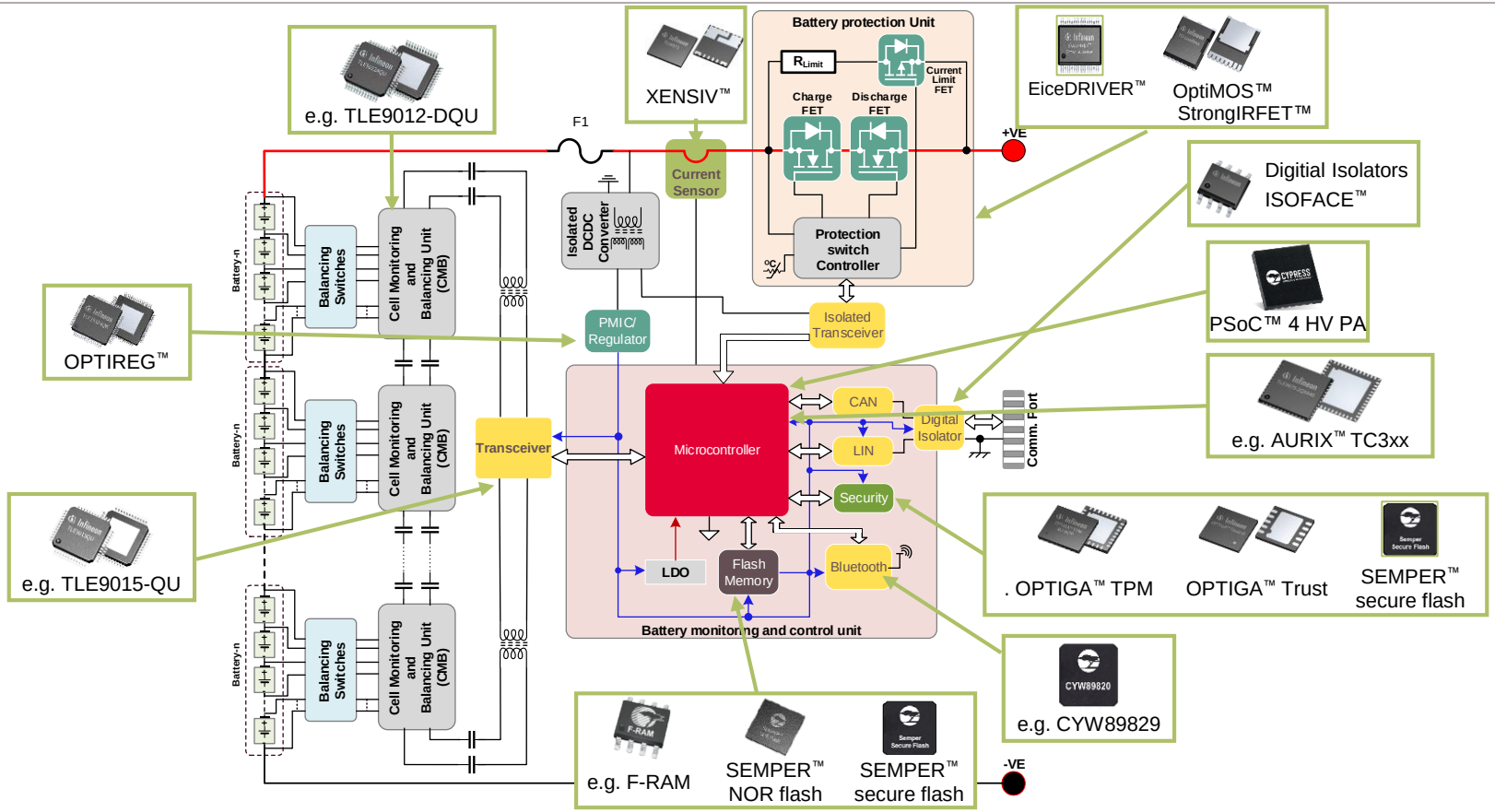

Copyright © Infineon Technologies AG 2023. All rights reserved.

Agenda

1. Introduction and overview of Infineon offering
2. Battery protection
3. Battery monitoring and balancing

Copyright © Infineon Technologies AG 2023. All rights reserved.

Infineon MOSFET value proposition

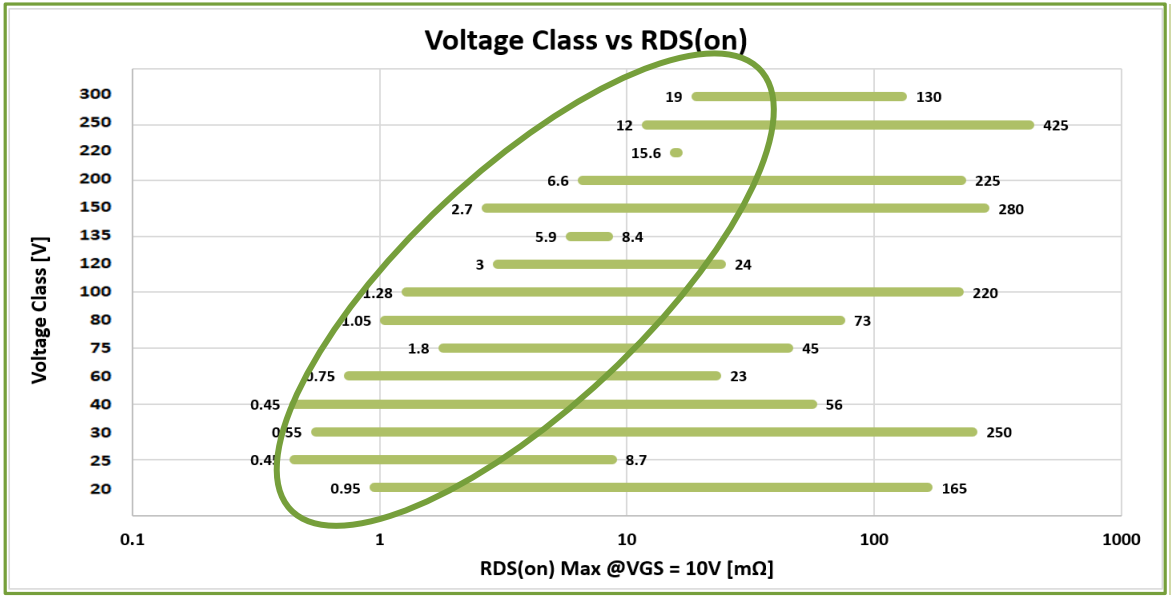

Value proposition

- Infineon leads the industry with respect to breath of portfolio.
- Infineon offers both best-in-class silicon technology including our latest 100 V **OptiMOS™ 6**, and drive optimized devices which includes the new 80-100 V **StrongIRFET™ 2** devices.
- Infineon has a broad range of high performance power packages to suit the majority of our customer needs.
  - The newest packages include **sTOLL, TOLG, TOLT, SuperSO8 DSC, and PQFN 3.3x3.3 Source-Down.**

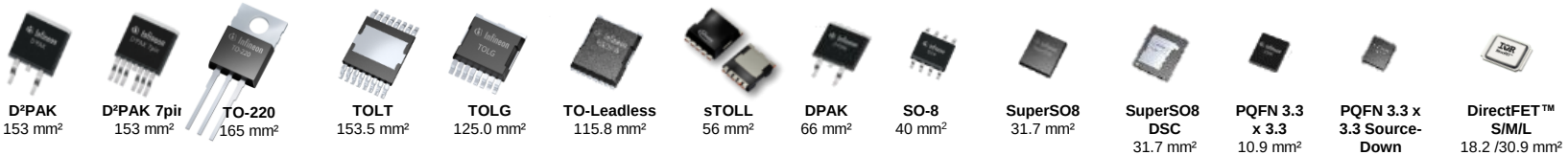

D²PAK 153 mm²
D²PAK 7pi 153 mm²
TO-220 165 mm²
TOLT 153.5 mm²
TOLG 125.0 mm²
TO-Leadless 115.8 mm²
sTOLL 56 mm²
DPAK 66 mm²
SO-8 40 mm²
SuperSO8 31.7 mm²
SuperSO8 DSC 31.7 mm²
PQFN 3.3 x 3.3 10.9 mm²
PQFN 3.3 x 3.3 Source-Down 10.9 mm²
DirectFET™ S/M/L 18.2 /30.9 mm²

Copyright © Infineon Technologies AG 2023. All rights reserved.

OptiMOS™ and StrongIRFET™

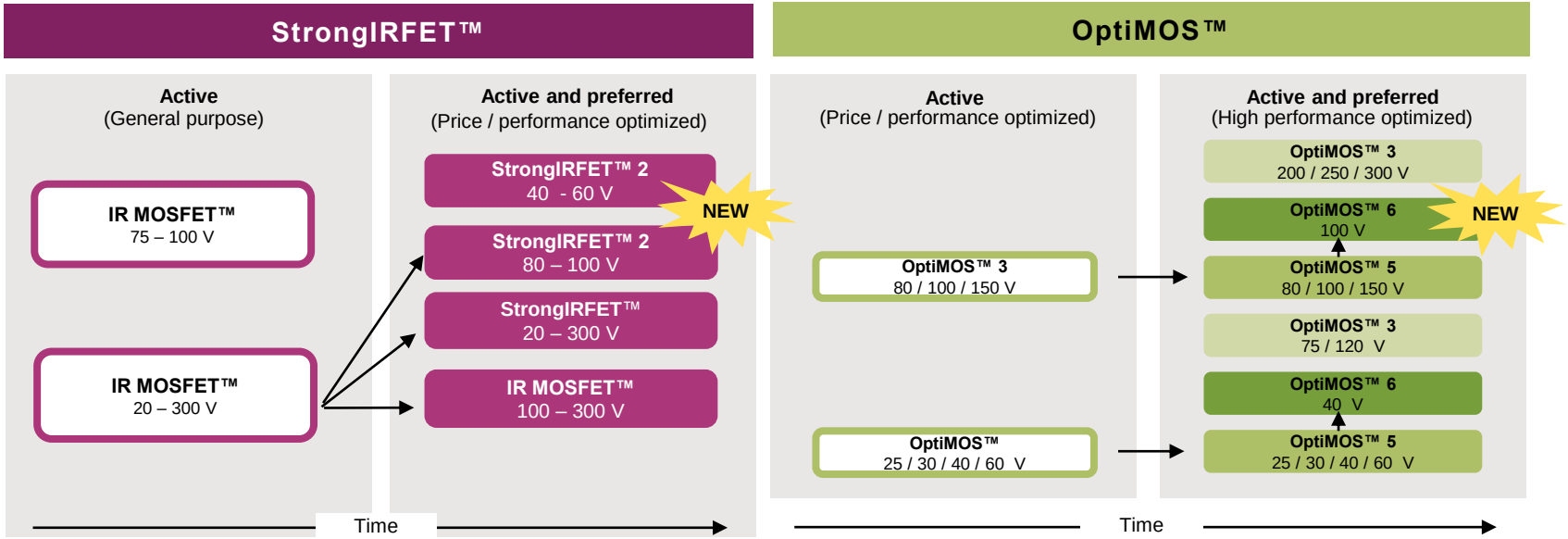

StrongIRFET™

Robust and excellent price/performance ratio

Right-fit products for a broad range of applications

Easy of design and flexible use

OptiMOS™

Best-in-class technology

Designed for high performance applications

Industry´s best figure of merit

High efficiency, power density and current capability

Copyright © Infineon Technologies AG 2023. All rights reserved.

Battery protection switch: MOSFETs

High-side

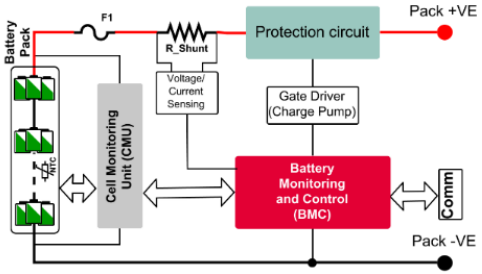

Low-side

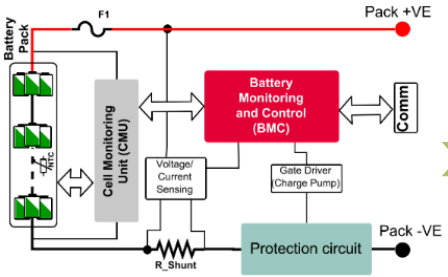

Protection circuit

Source to Source

Drain to Drain

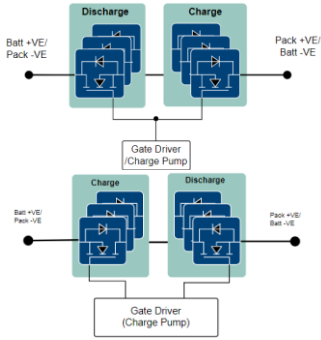

MOSFETs used as protection switch shall offer

- Low drain to source on resistance ($R_{DS(on)}$)
- Low thermal resistance (R_{thJA})
- Sufficient safe operating area (SOA)
- Rugged linear mode operation

10 A — 20 A — 27 A — 30 A — 3 5A — 37 A — 129 A*

Package	S308	SS08	sTOLL	D²PAK	D²PAK-7Pin	TOLL	TOLT
							
Dimenion	3 X 3 mm	5 x 6mm	7 X 7mm	10 X 15mm	10 X 15mm	10 X 12mm	10 X 15mm

* with heatsink on top of TOLT

Key features and benefits

- Sufficient safe operating area (SOA)
- Short circuit protection with higher peak current rates
- Cheaper solutions
- more effective parallelization solutions
- Up to 250 V MOSFET protection solutions

Copyright © Infineon Technologies AG 2023. All rights reserved.

MOSFETs for battery protection

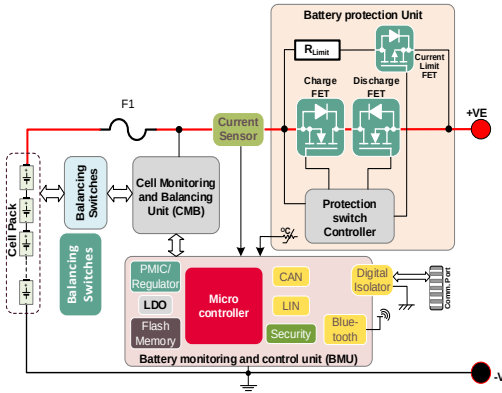

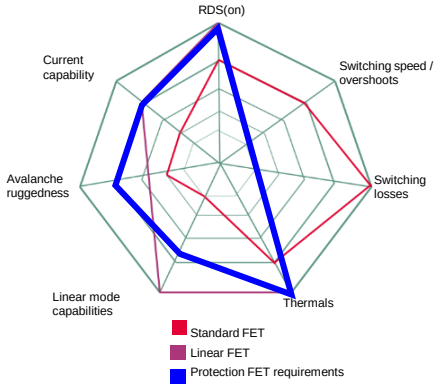

StrongIRFET™

Active

(Price-performance optimized)

IR MOSFET™

Active and preferred

(High performance optimized)

StrongIRFET™

OptiMOS™

Active

(Price-performance optimized)

OptiMOS™ 3

Active and preferred

(High performance optimized)

OptiMOS™ 5

OptiMOS™ 6

Time

Time

StrongIRFET™ / OptiMOS™ 3

- Right fit products
- Competitive price position
- Rugged silicon
- Wide SOA
- Low thermal resistance
- Wide rage of package offerings

OptiMOS™ 5

- Low $R_{DS(on)}$
- Optimized for efficiency and power density
- Excellent price-performance ratio

OptiMOS™ 6

- Low $R_{DS(on)}$ Benchmark performance
- Excellent efficiency
- Excellent thermal behavior

Copyright © Infineon Technologies AG 2023. All rights reserved.

TOLT vs TOLL and TOLG

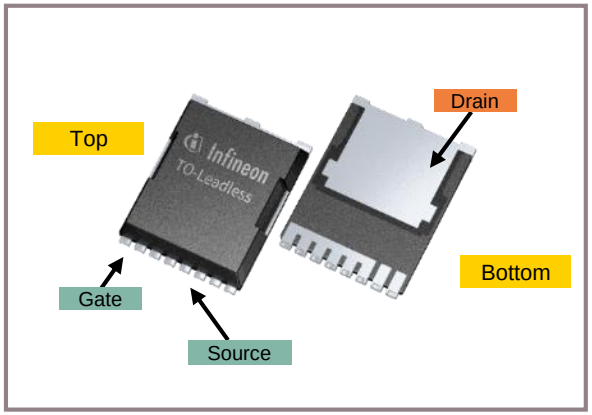

TOLL

TO-Leadless

Optimized for high power applications

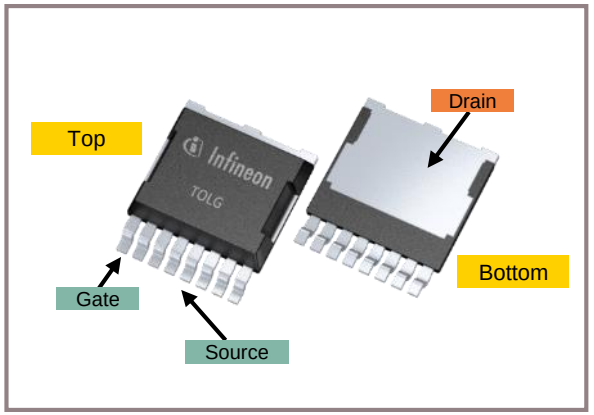

TOLG

TO-Leadless with **gullwing leads**

Optimized for better TCoB robustness

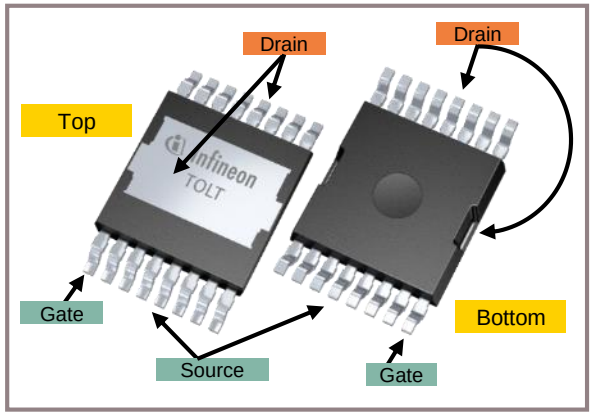

TOLT

TO-Leadless **top-side cooling**

Optimized for superior thermal performance

Copyright © Infineon Technologies AG 2023. All rights reserved.

TOLT – Cooling concept
Mechanical structure of inverter board

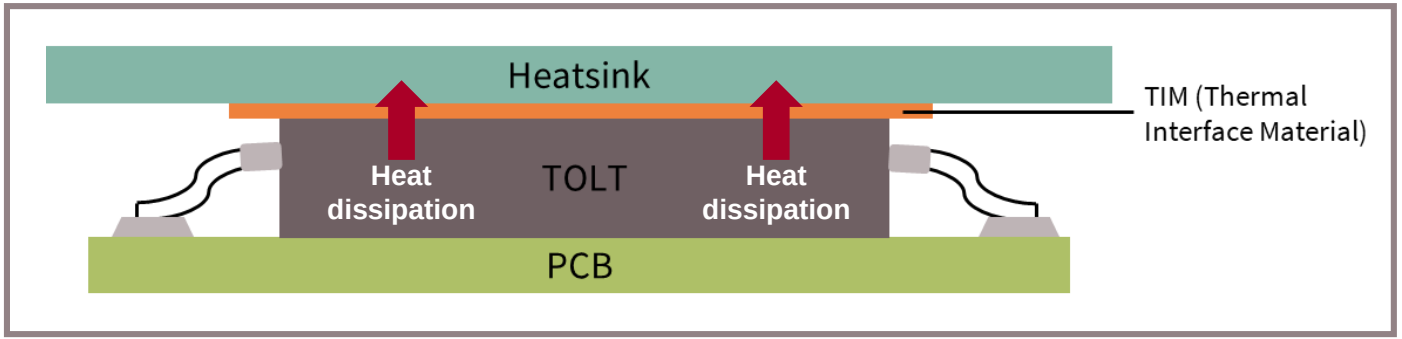

TOLT

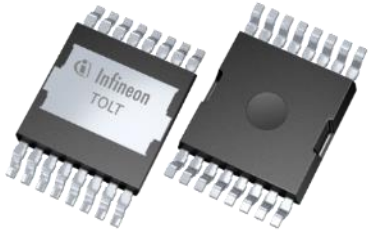

With top-side cooling setup, the drain is exposed at the surface of the package.

For this reason, **heat dissipation** can be **promoted directly to the heatsink** achieving at least 20% better R_{thJA} compared to TOLL.

MOSFET (including chip, die attached and drain tab) → TIM / Thermal grease → Heatsink

Copyright © Infineon Technologies AG 2023. All rights reserved.

OptiMOS™ 5 in TOLT – Top-side cooling

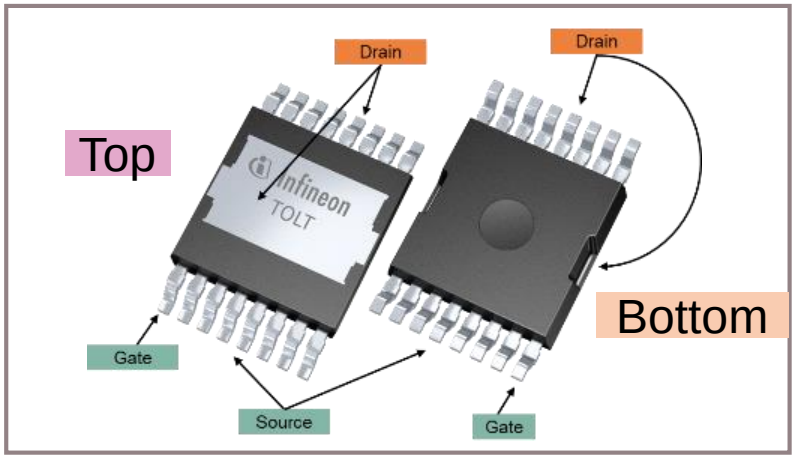

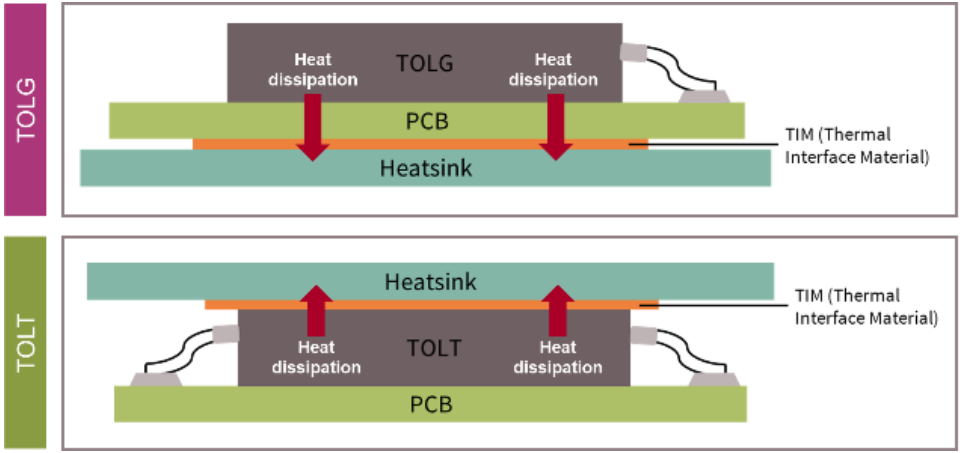

Value proposition

- BiC performance (very low $R_{DS(on)}$ and high current capability)
- Heat dissipation promoted directly to the heatsink ➔ 20% better R_{thJA} compared to bottom side cooling packages
- Only 5% of the heat is getting dissipated through the PCB

Product portfolio

Voltage class	Part number	$R_{DS(on)}$ max. @10V [mΩ]
80 V	IPTC012N08NM5	1.2
	IPTC014N08NM5	1.4
100 V	IPTC015N10NM5	1.5
	IPTC019N10NM5	1.9

Copyright © Infineon Technologies AG 2023. All rights reserved.

Package value proposition: power vs size

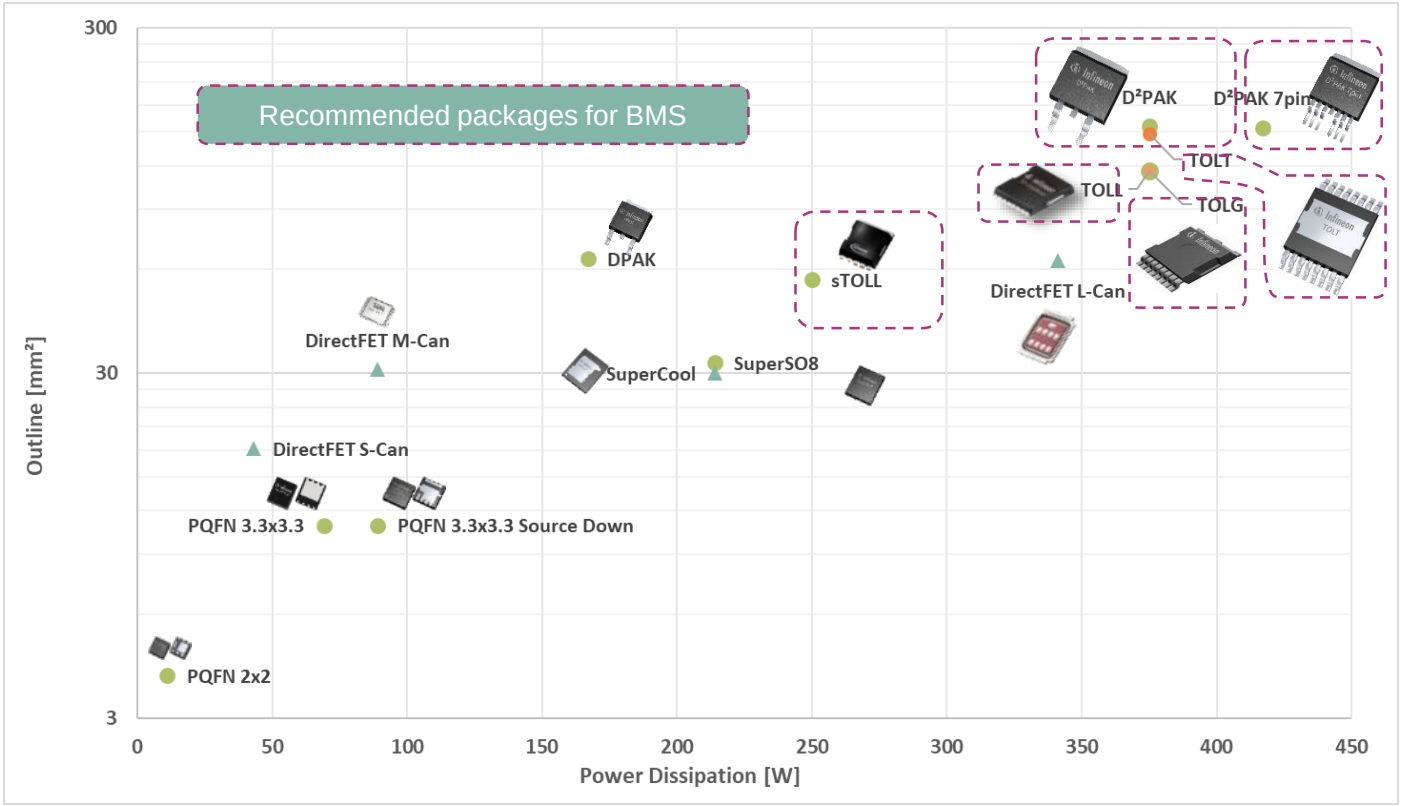

- Value driver for protection FET function are
  - High current carrying capability
  - Lower R_{th}
  - Lower $R_{DS(on)}$

- Preferred package types for protection function are
  - sTOLL,
  - D²PAK,
  - D²PAK-7,
  - TOLL,
  - TOLG
  - TOLT

● SMD ▲ Dual-side cooling

Copyright © Infineon Technologies AG 2023. All rights reserved.

List of recommended MOSFETs for ESS

Battery voltage [V]	V_{DS} [V]	$R_{DS(on)}$ [mΩ]	Package	Part number
144-200	250-300	12	TO-247	IRF250P224
		19	TO-247	IRF300P226
		21	TOLL	IPT210N25NFD
		21	TOLG	IPTG210N25NM3FD
		40.7	D^2PAK	IPB407N30N
		60	D^2PAK	IPB600N25N3 G
96-144	200	6.6	TO-247	IRF200P222
		10.7	D^2PAK	IPB107N20N3G
		11.1	TOLG	IPTG111N20NMM3FD
72-96	135-150	2.5	TO-247	IRF150P220
		3.9	TOLL	IPT039N15N5
		4.4	D^2PAK 7pin	IPB044N15N5
		4.4	TOLL	IPT044N15N5
		4.8	D2PAK	IPB048N15N5
		5.4	TOLL	IPT054N15N5
		5.9	D^2PAK 7pin	IRF135SA204
		9.3	SuperSO8 5x6	BSC093N15NS5

Battery voltage [V]	V_{DS} [V]	$R_{DS(on)}$ [mΩ]	Package	Part number
60-72	100-120	1.4	TOLG	IPTG014N10NM5
		1.5	TOLT	IPTC015N10NM5
		1.5	TOLL	IPT015N10N5
		2.0	D^2PAK	IPB020N10N5
		2.24	SuperSO8 5x6	ISC022N10NM6
		1.7	D^2PAK 7pin	IPB017N10N5
		3.0	TOLT	IPTC030N12N3 G
		3.6	D2PAK 7pin	IPB036N12N3 G
48-60	75-80	1.5	D^2PAK 7pin	IPB015N08N5
		1.2	TOLT	IPTC012N08NM5
		1.1	TOLG	IPTG011N08NM5
		1.2	TOLL	IPT012N08NM5
		1.9	SuperSO8 5x6	BSC019N08NS5
24-48	60	0.75	TOLL	IPT007N06N
		0.75	TOLG	IPTG007N06NM5
		1.2	SuperSO8 5x6	BSC012N06NS
		1.0	SuperSO8 5x6	ISC010N06NM5

Copyright © Infineon Technologies AG 2023. All rights reserved.

EiceDRIVER™ - 2ED4820-EM

Key general features

- Extended supply voltage range: 20–70 V
- Robust against V_{bat} voltages up to 105 V and V_{source} voltages versus V_{bat} of -90 V
- Two independent high-side gate driver outputs with 1 A pull down, 0.3 A pull up for fast switch off/on, to drive multiple MOSFETs in parallel and supports back-to-back MOSFET topologies (common drain or source)
- Device control, configuration and diagnostic via SPI
- One bidirectional high- or low-side analog current sense interface with configurable gain to optimize power losses
- SAFESTATEN input to trigger safe state mode in case of µC failure
- Automotive qualified according to AEC-Q100 grade 1

Key diagnostic & protection features

- Configurable overcurrent/short circuit protection through shunt voltage measurement
- Short circuit protection via configurable VDS threshold
- Gate undervoltage lock-out
- Automatic turn OFF during over/undervoltage of battery voltage
- Diagnosis of MOSFET source voltages in OFF state, for open load detection
- Internal chip temperature monitoring

Application diagram

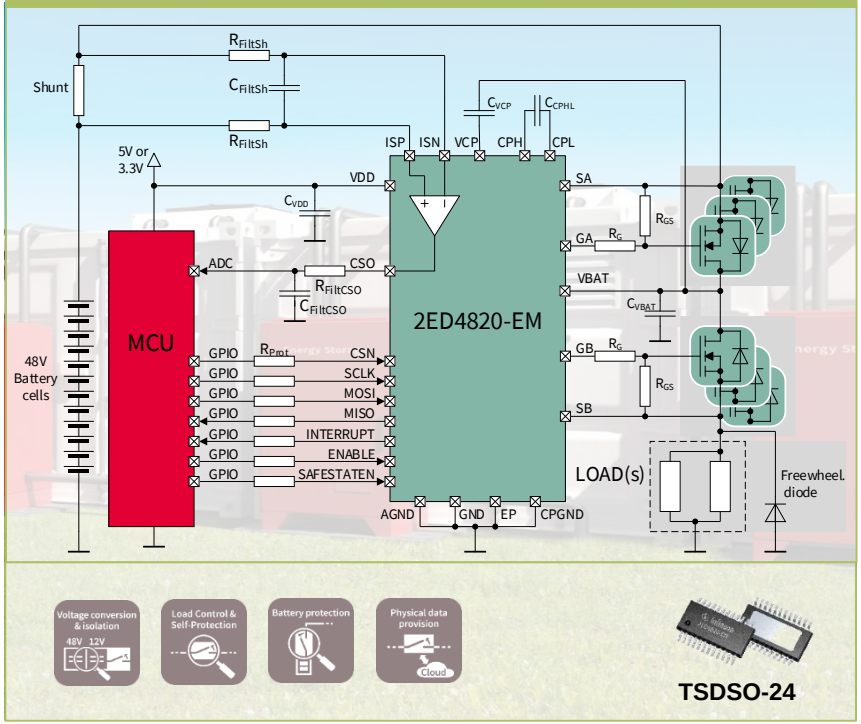

Copyright © Infineon Technologies AG 2023. All rights reserved.

EiceDRIVER™ APD - 2ED4820-EM: Why using a 2ED4820-EM ?

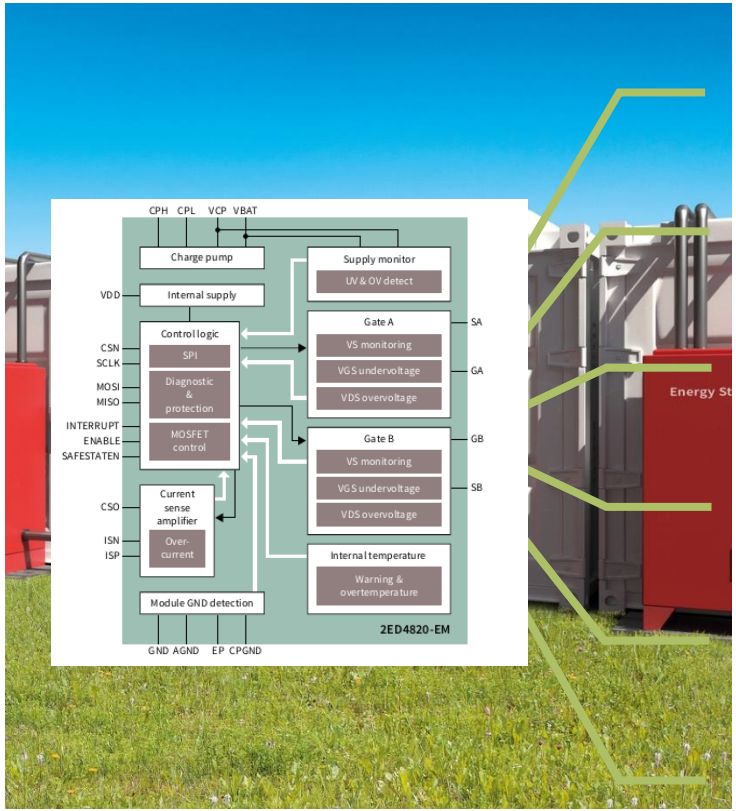

6 Main reasons to use 2ED4820-EM in dependable 48 V power supplies

- Faster reaction time (~ 10 µs) than full discrete solutions and classic fuses (~ 20 ms)– key for fail operational board-net
- Integrated bidirectional high- or low-side current sense amplifier saves PCB space and placement cost
- High current support: Drive many MOSFETs with bidirectional blocking (common source or drain)
- Pre-charge channel for ECUs with high input capacitance
- Robust against under- / overvoltage in the board-net
- Flexible configuration of protection features plus accessibility of diagnosis information via SPI

Copyright © Infineon Technologies AG 2023. All rights reserved.

Agenda

1. Introduction and overview of Infineon offering
2. Battery protection
3. Battery monitoring and balancing

Copyright © Infineon Technologies AG 2023. All rights reserved.

BMS – Cell balancing & monitoring

- Cell balancing
- Accurate voltage measurement
- Temperature measurement
- Host communication

- MCU – BMS IC interaction
- Direct UART communication
- Isolated UART communication
- Error output pin





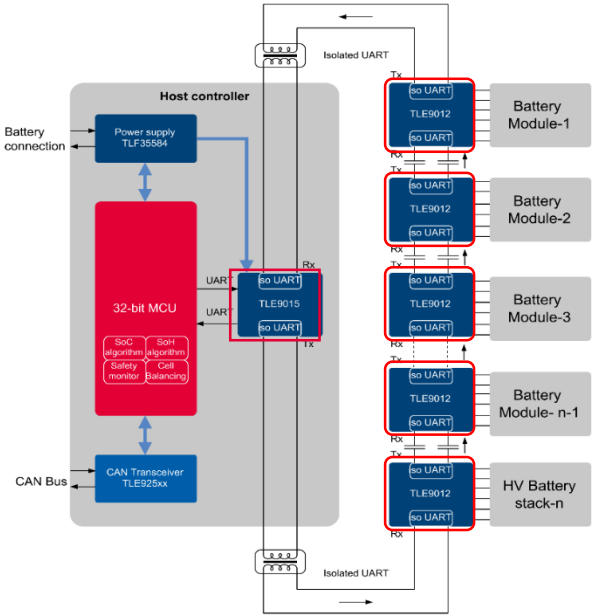

Device	Product	Part number
Cell supervisory circuit	12 ch sensing IC	TLE9012DQU*
Transceiver IC	Iso UART transceiver IC	TLE9015DQU*

* = ASIL-D compliant

[Battery cell balancing and monitoring]

Know more

Copyright © Infineon Technologies AG 2023. All rights reserved.

From TLE9012AQU to TLE9012DQU

ISO 26262 compliant

AEC Qualified

Basic features

- Balancing and monitoring for up to 12 cells in series
- Robust 90 V automotive technology supports hot plugging
- Dedicated 16-bit delta-sigma ADC per cell enabling synced & filtered measurements
- Several built-in digital filtering (down to 70 Hz cut-off)
- 5 NTC channels + additionally 4 GPIOs to connect e.g. an external EEPROM
- UART & capacitive coupled interface for daisy chain & ring mode communication
- Cyclic diagnosis scheme (Round Robin)
- Stress sensor for compensation calculation

TLE9012AQU - *not for new design*

New features introduced by TLE9012DQU

- Long running measurement mode
- Individual balancing counter for each cell
- Increased range of
  - Open load threshold
  - Overcurrent/Undercurrent threshold
- Enhanced auxiliary voltage measurement
- Additional diagnosis function e.g. TMP diagnosis register, manual activation of Idiag currents, …
- ISO 26262 Safety element out of context for safety requirements up to ASIL D

***new* TLE9012DQU**



Copyright © Infineon Technologies AG 2023. All rights reserved.

From TLE9015QU to TLE9015DQU

Basic features

- Two UART ports for serial communication to host microcontroller
- Two iso UART ports for daisy chain communication inside battery pack
- Fully transparent communication scheme from µC to balancing & monitoring IC
- Ring mode topology compatible (only 1 device needed)
- High robustness against external noise
- General purpose error pin
- Error output pin to trigger external microcontroller
- Internal supply monitoring

New features introduced by TLE9015DQU

- CRC polynomial

TLE9015AQU - *not for new design*

***new* TLE9015DQU**



Copyright © Infineon Technologies AG 2023. All rights reserved.

TLE9015DQU
iso UART transceiver IC

Key benefits



- Two UART ports for serial communication to host microcontroller
- Two iso UART ports for daisy chain communication inside battery pack
- Fully transparent communication scheme from µC to sensing IC (TLE9012DQU)
- Ring mode topology compatible (only 1 device needed)
- Supporting up to 2 Mbit/s
- High robustness against external noise
- General purpose error pin
- Two external fault inputs with internal latching
- Error output pin to trigger external microcontroller
- Internal supply monitoring
- AEC-Q100 qualified

Block diagram

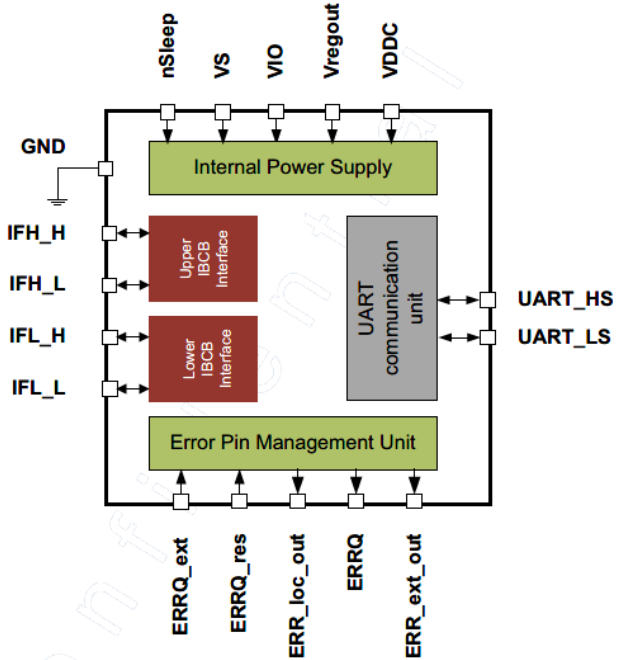

Copyright © Infineon Technologies AG 2023. All rights reserved.

Infineon industrial microcontrollers portfolio

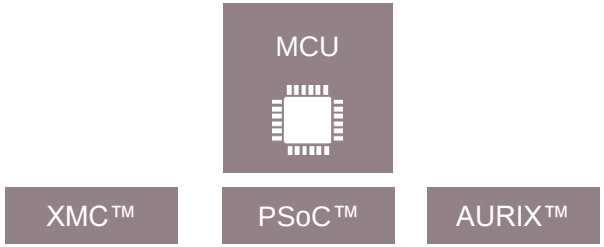

Infineon has combined its wealth of experience in microcontroller design to offer a wide portfolio that can cover broad range of industrial applications. It is based on:

- The **XMC™ family** for real-time critical applications where a industry-standard core is needed
- The **AURIX™ family** when more performance, connectivity, safety and security are needed
- The **PSoC™** family is the world's only programmable embedded system-on-chip solutions based on the ARM™ Cortex™ -M processor



Copyright © Infineon Technologies AG 2023. All rights reserved.

PSoC™ 4: Your problem solver on chip

Make it smarter

The programmable analog blocks in PSoC™ 4 devices allow you to customize your analog-front-end, enabling you to easily integrate intelligent analog sensors into



Intelligent sensor integration

Make it connected

Bluetooth® Low Energy integrated into some PSoC™ 4 devices simplifies RF design. Additional wired interfaces such as USB and CAN are also available



CAN

Wired and wireless connectivity

Make it easy to use

PSoC™ 4 simplifies complex HMI interfaces such as capacitive and inductive sensing enabling sleek, robust, and easy-to-use interfaces

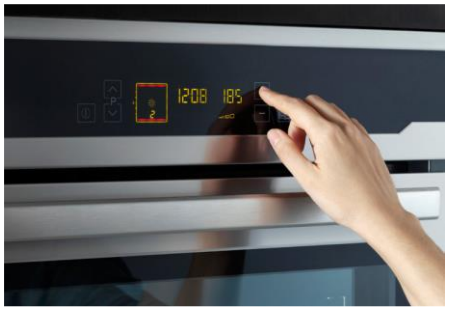

Capacitive and inductive sensing

Copyright © Infineon Technologies AG 2023. All rights reserved.

PSoC™ 4: Your platform for product differentiation

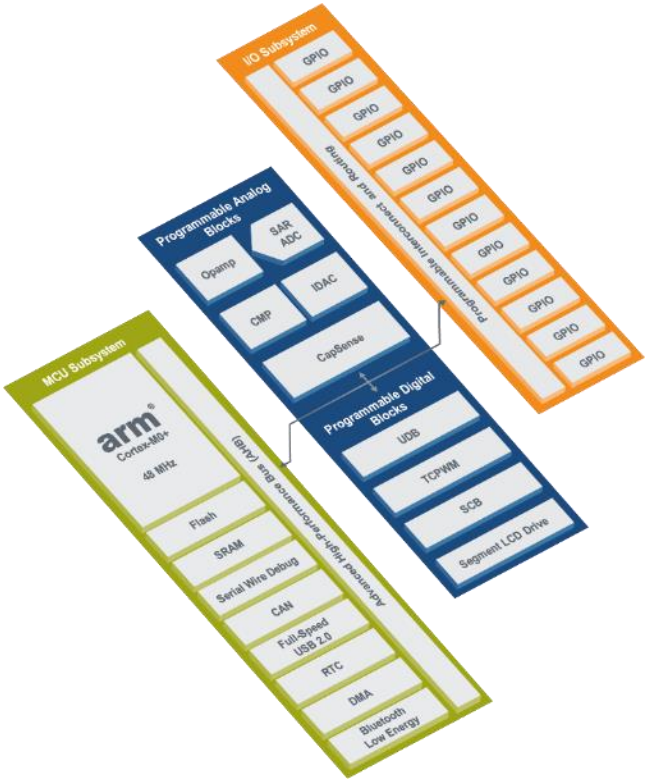

- Make your product smarter
  - Easily add intelligent sensors to your embedded application through programmable analog blocks
  - Eliminate additional onboard analog components by customizing your analog front end with programmable analog blocks
- Make your product connected
  - Integrate wired connectivity such as CAN and USB
  - Add Bluetooth® Low Energy connectivity with PSoC™ 4 with Bluetooth® LE
- Make your product easy to use
  - Add capacitive touch, proximity sensing, and liquid-level sensing to your application with CAPSENSE™, the industry's leading capacitive-sensing solution
  - Create state-of-the art industrial designs, detecting touch inputs using metal surfaces, with Infineon's inductive-sensing solution

Copyright © Infineon Technologies AG 2023. All rights reserved.

PSoC™ 4 portfolio

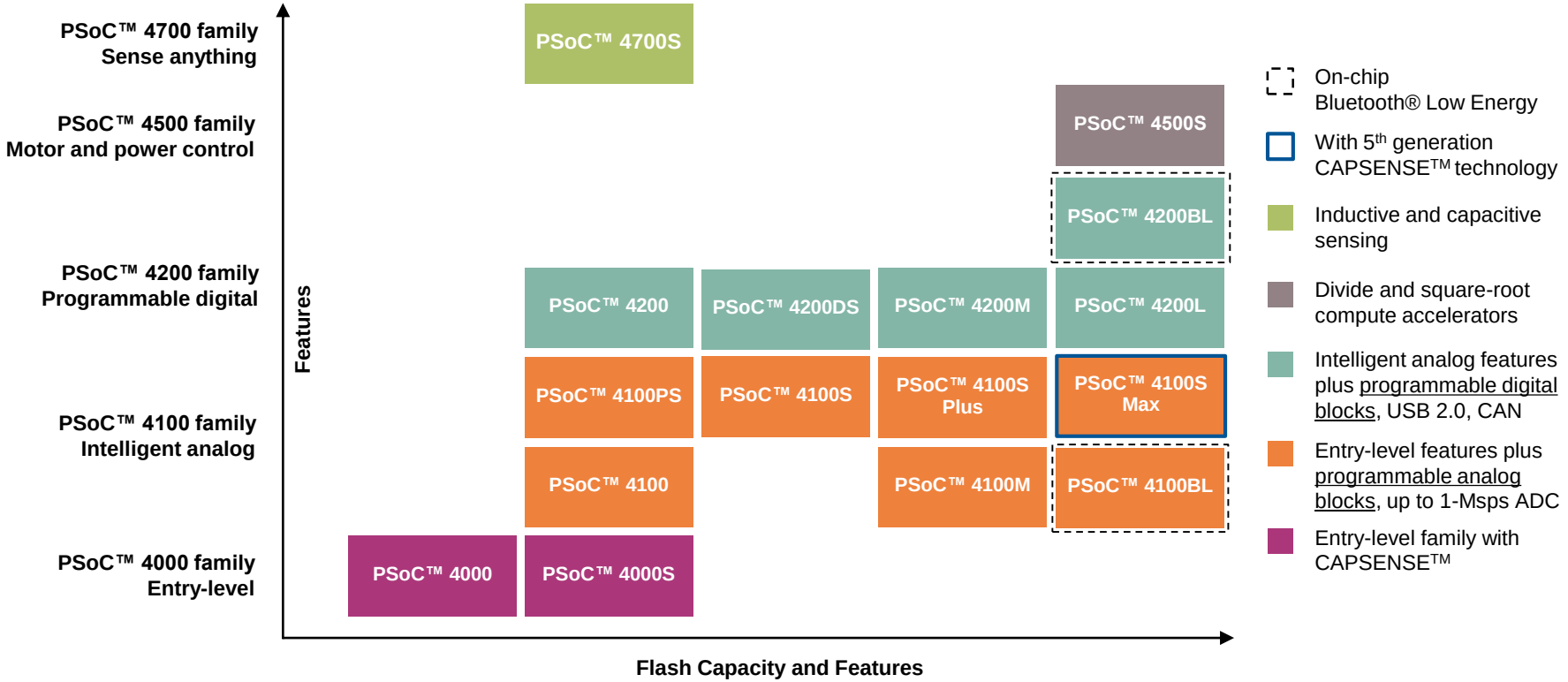

Copyright © Infineon Technologies AG 2023. All rights reserved.

Getting started with PSoC™ 4

Download the PSoC™ Creator IDE or ModusToolbox™ software

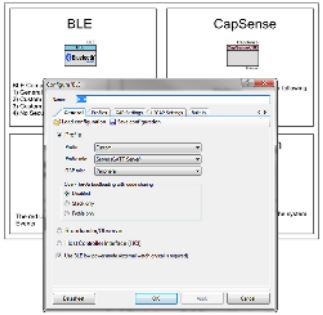

PSoC™ Creator IDE with graphical front ends



ModusToolbox™ software environment

Purchase the PSoC™ 4 kit



PSoC™ 4 pioneer kit CY8CKIT-042



PSoC™ 4 Bluetooth® LE pioneer kit (CY8CKIT-042-BLE-A)

Watch a PSoC™ 101 training video tutorial series





Copyright © Infineon Technologies AG 2023. All rights reserved.

PSoC™ 4000 family

Applications

User interface in wearable, mobile, personal care, IoT, and small home appliances

Features

- **32-bit MCU subsystem**
  - Arm® Cortex®-M0/M0+ CPU
  - Up to 32 KB flash and 4 KB SRAM
  - Real-time clock capability with a watch crystal oscillator (WCO)
- **Programmable analog blocks**
  - One 10-bit, 46.8-ksps single-slope ADC[1]
  - Two low-power comparators (CMPs)
  - One CAPSENSE™ block that supports low-power operation and mutual-capacitance sensing
  - Two 7-bit current-output digital-to-analog converters (IDACs) configurable as a single 8-bit IDAC
- **Programmable digital blocks**
  - Five 16-bit timer/counter/pulse-width modulator (TCPWM) blocks
  - Two serial communication blocks (SCBs) that are configurable as I²C, SPI, or UART
- **Packages**
  - 8-SOIC, 16-SOIC, 16-WLCSP, 25-WLCSP, 16-QFN, 24-QFN, 28-SSOP, 32-QFN, 32-TQFP, 40-QFN, and 48-TQFP
- **I/O subsystem**
  - Up to 36 GPIOs, including 16 Smart I/Os[2]

Collateral

Datasheet: PSoC™ 4 product page

[1] A simple ADC used to measure slow-moving signals
[2] Embedded programmable digital logic in the I/O subsystem

PSoC™ 4 One-chip solution

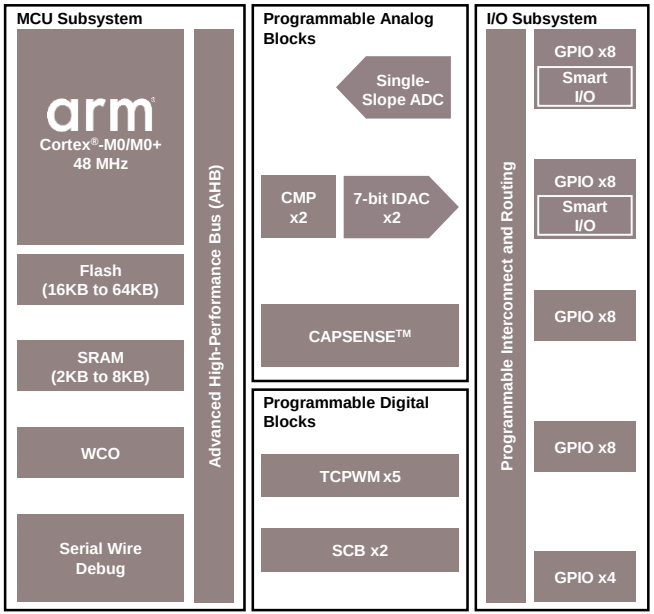

Availability

	4000T	Others
Sampling	Q1'22	Now
Production:	Q3'22	Now

Copyright © Infineon Technologies AG 2023. All rights reserved.



Part of your life. Part of tomorrow.