

E-series Hybrid Flyback Controller Family XDPS2201E and XDPS2221E

February 2025

E-series Hybrid Flyback Controller Family
Target applications

Chargers



USB-C



E-bike



Power tool

AC-DC power supplies









Copyright © Infineon Technologies AG 2025. All rights reserved.

Hybrid flyback (HFB) topology
Key advantages vs. other DC-DC topologies

Conventional flyback with snubber

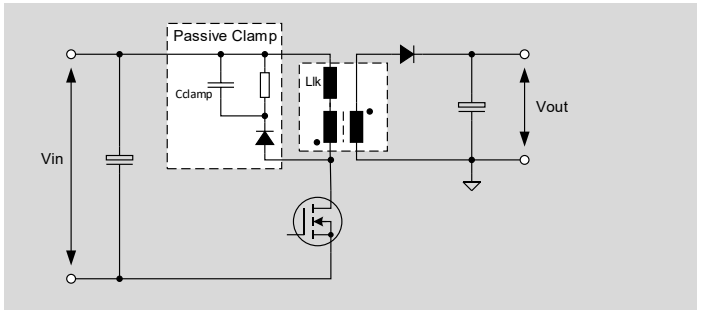

Flyback recycling the leakage energy for ZVS
but all energy transfer stored in transformer
(same transformer size as conventional flyback)

Active clamp flyback (ACF)

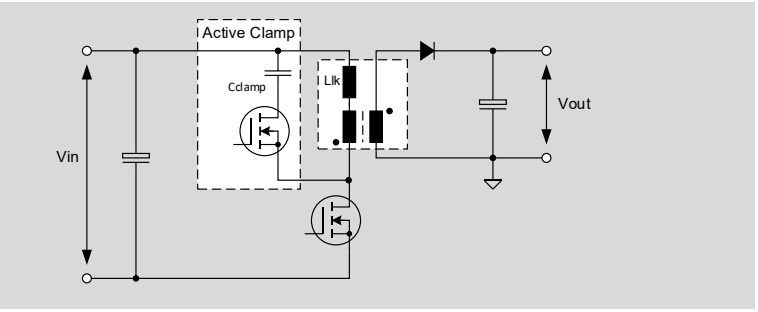

- ✓ **Reduced magnetic energy storage for transformer size reduction**
- ✓ **Lower breakdown voltage rating for switches / output rectifier**

Incorporates resonant energy storage for
substantial forward energy transmission
and Zero-Voltage-Switching

LLC / LCC

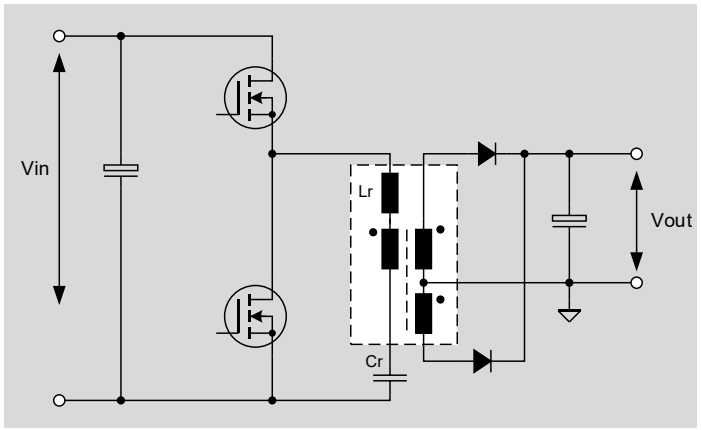

- ✓ **Reduced leakage inductance for transformer size reduction (vs LCC)**
- ✓ **Higher efficiency for wide output range design (vs LLC)**

Hybrid flyback

Infineon's novel asymmetrical half-bridge (AHB)

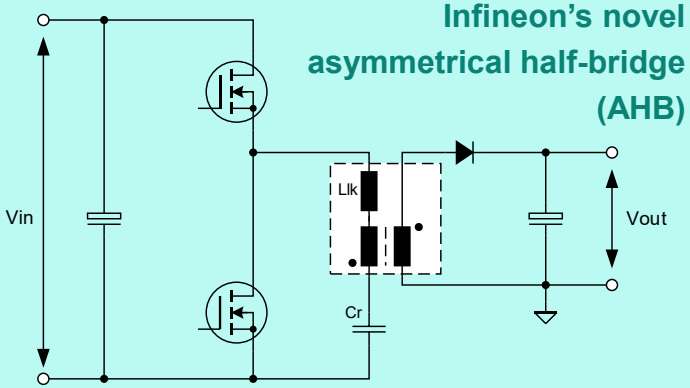

Copyright © Infineon Technologies AG 2025. All rights reserved.

Infineon's Hybrid flyback (HFB) topology
A real boost for high power density designs

Value proposition

1. Excellent efficiency

› Superior efficiency over whole output voltage and load range, full support of GaN and Si

2. Wide voltage range

› Supporting very wide output voltage range

› Proven full AC input voltage range for global designs

3. Reduced system BOM

› No fan, no heat-sink, smaller transformer, active SR with single MOSFET

4. Low standby power

› Supports lowest standby power at no or light loads

› Ref. designs compliant with CoC and DoE standards

Target Appl.

- SMPS
- Charger
- Power Tools
- eBike Charger
- TV
- Lighting

Performance highlights compared to LLC resonant

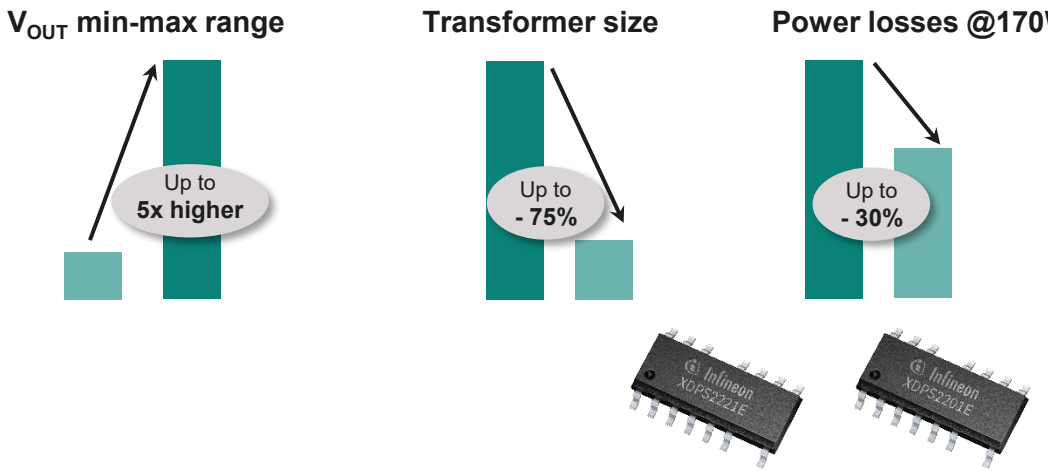

Product	Description	Availability
XDPS2201E	Standalone HFB controller	Available
XDPS2221E	Combo CrCM + HFB controller	Available

Copyright © Infineon Technologies AG 2025. All rights reserved.

E-series Hybrid Flyback Controller Family

Product Features

E-series Hybrid Flyback Controller Family
XDP™ XDPS2201E: Hybrid Flyback controller

Circuit Diagram

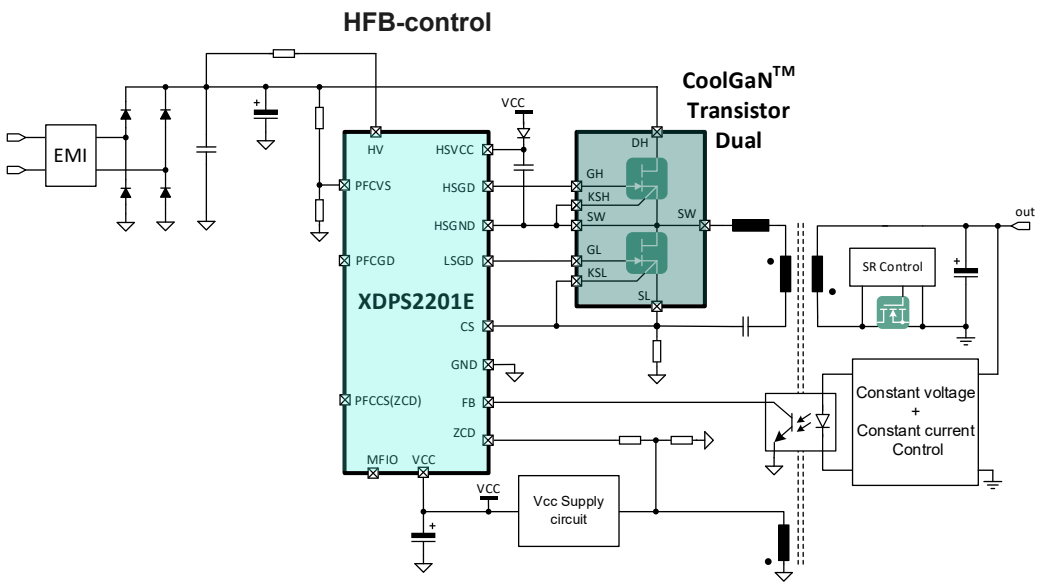

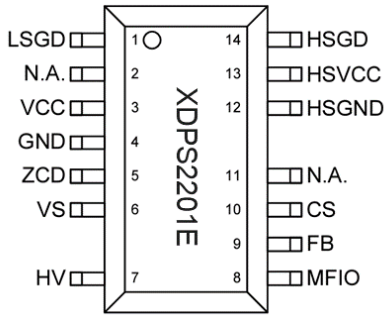

Inherent HFB topology advantages

- Low voltage stress on primary and secondary switches
- Small transformer by forward energy transfer

Key features

- **600 V high voltage start-up cell** for fast VCC charging
- **Burst mode operation** control for lowest stand-by power
- **HFB peak current control** for robust and fast control
- **HFB ZVS operation** of high-side and low-side switch (with **ZVS pulse insertion in DCM**)
- **Ease of ZVS realization** with pseudo adaptive dead time based on ZCD
- **Improved mode transition** for high stability and low audible noise
- **Enhanced jitter functionality** for EMI reduction
- **Integrated gate drivers** supporting latest Si and GaN switches
- **Flexibility** to support the option of an external PFC
- **Configurability** for protections and system performance
- DSO-14 (150mil) package

Copyright © Infineon Technologies AG 2025. All rights reserved.

E-series Hybrid Flyback Controller Family
XDP™ XDPS2221E: PFC + Hybrid Flyback Combo controller

Circuit Diagram

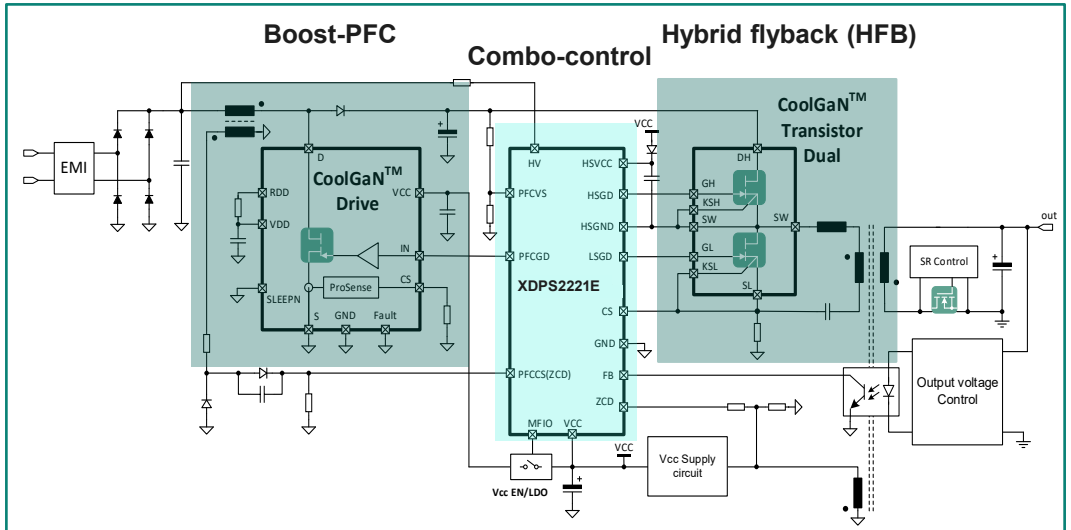

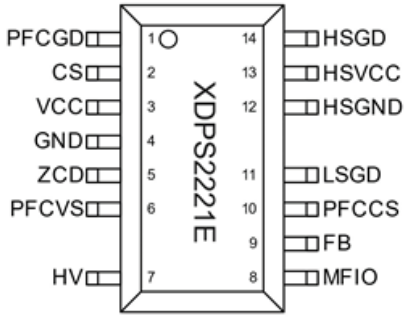

Inherent HFB topology advantages

- Low voltage stress on primary and secondary switches
- Small transformer by forward energy transfer

Key features

- **600 V high voltage start-up cell** for fast VCC charging
- **Burst mode operation** control for lowest stand-by power
- **HFB peak current control** for robust and fast control
- **HFB ZVS operation** of high-side and low-side switch (with **ZVS pulse insertion in DCM**)
- **PFC QRM multimode** operation for high efficiency
- **Enhanced PFC dynamics** for bulk cap minimization and improved load transient response
- **Harmonized PFC and hybrid flyback control**
- **Integrated gate drivers** supporting latest Si and GaN switches
- **Configurability** for protections and system performance
- DSO-14 (150mil) package

Copyright © Infineon Technologies AG 2025. All rights reserved.

E-series Hybrid Flyback Controller Family
Hybrid Flyback control

Hybrid flyback control

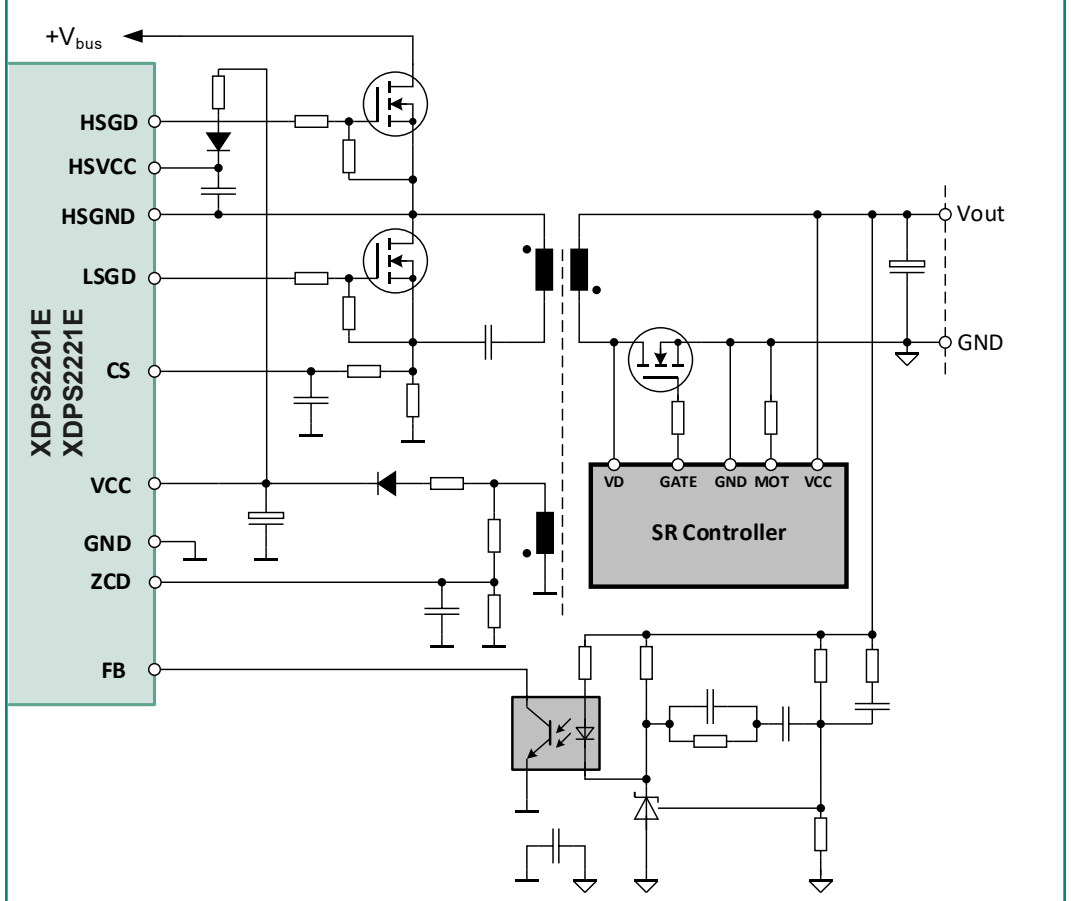

Hybrid flyback control features

- **Peak current mode control for robust and fast output regulation**
- **Propagation delay compensation**
- **Switching frequency jitter for EMI noise reduction**
- **ZVS operation** (Infineon IP) **incl. body-diode cross conduction prevention** under all conditions
- ZVS-pulse insertion in ZV-RVS mode
- I_{magneg}-ctrl for keeping ZVS for wide V_{BUS} voltage range
- Dedicated start-up control
- **Valley control for improved light load efficiency**

Copyright © Infineon Technologies AG 2025. All rights reserved.

E-series Hybrid Flyback Controller Family
Hybrid Flyback operation modes waveforms

CRM - Mode

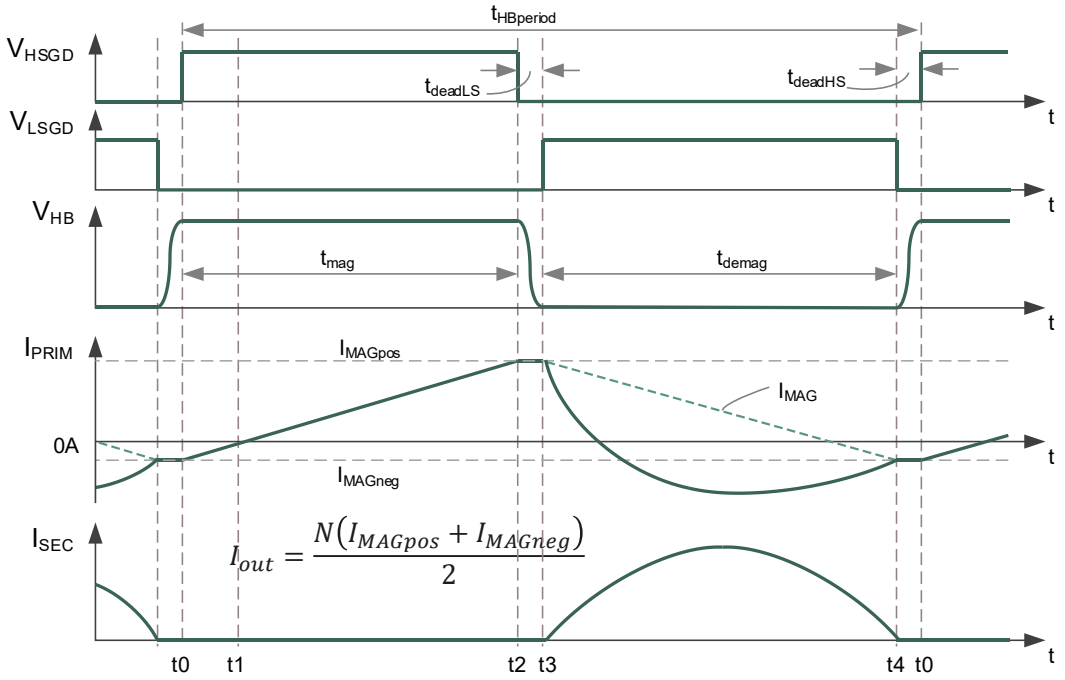

→ **CRM operation in full and part load**

ZV-RVS - Mode with waitgap & ZVS-pulse insertion

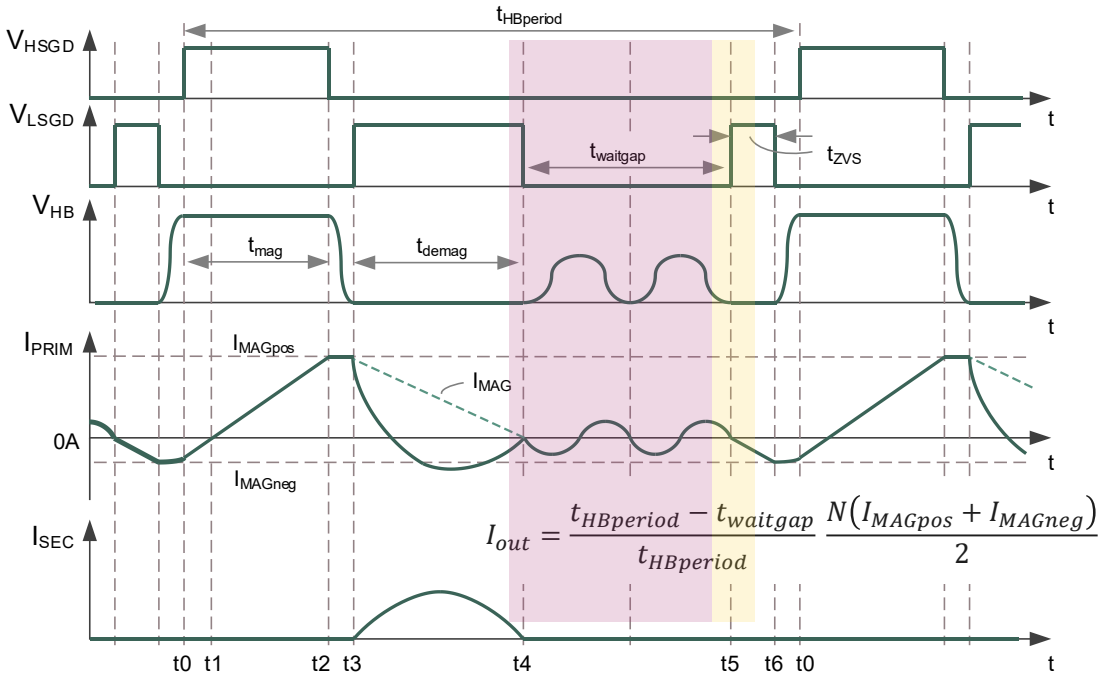

→ **ZV-RVS (DCM) - mode with ZVS pulse insertion for increased partial and light load efficiency**

Copyright © Infineon Technologies AG 2025. All rights reserved.

E-series Hybrid Flyback Controller Family
Hybrid Flyback control

Combo control

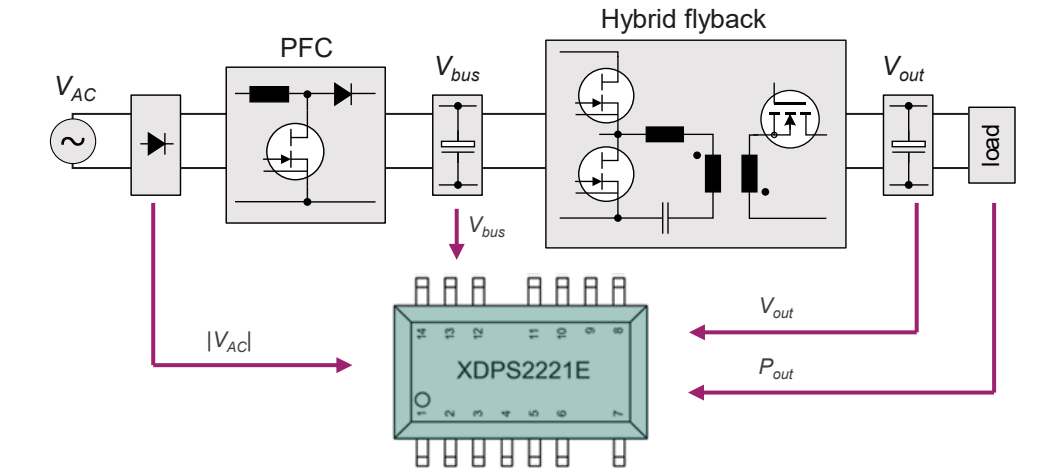

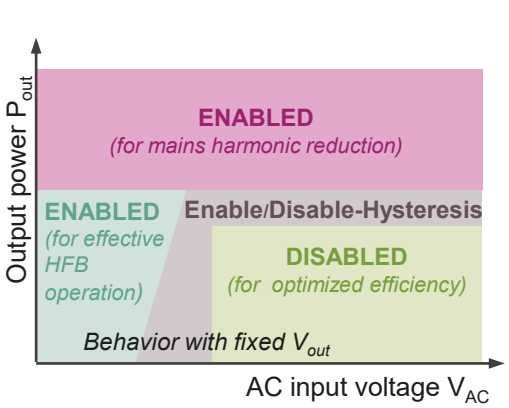

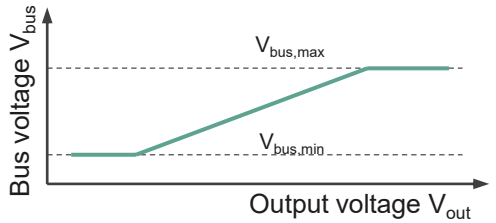

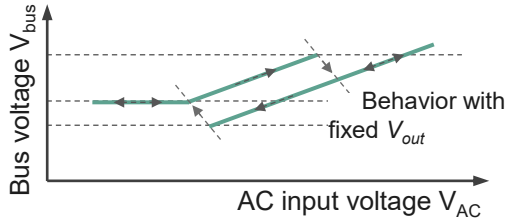

Combo control features

- **PFC enable/disable** control depending on load, AC input and output voltage for **improved efficiency** and **low standby power consumption**
- **Optimized PFC and HFB start-up sequence** for quick response time
- **Adaptive PFC bus voltage** depending on AC input and output voltage
- **Synchronized PFC and hybrid flyback burst mode** operation for **high light-load efficiency** and **low** standbypower consumption
- **High level of integration** for **ease of system design** and **low system BOM**

Copyright © Infineon Technologies AG 2025. All rights reserved.

E-series Hybrid Flyback Controller Family – XDPS2221E
Harmonized combo control

Example of the advantage of adaptive bus voltage target level over fixed bus voltage target level in an USB-PD application

V_{AC} = 115 V / 60 Hz

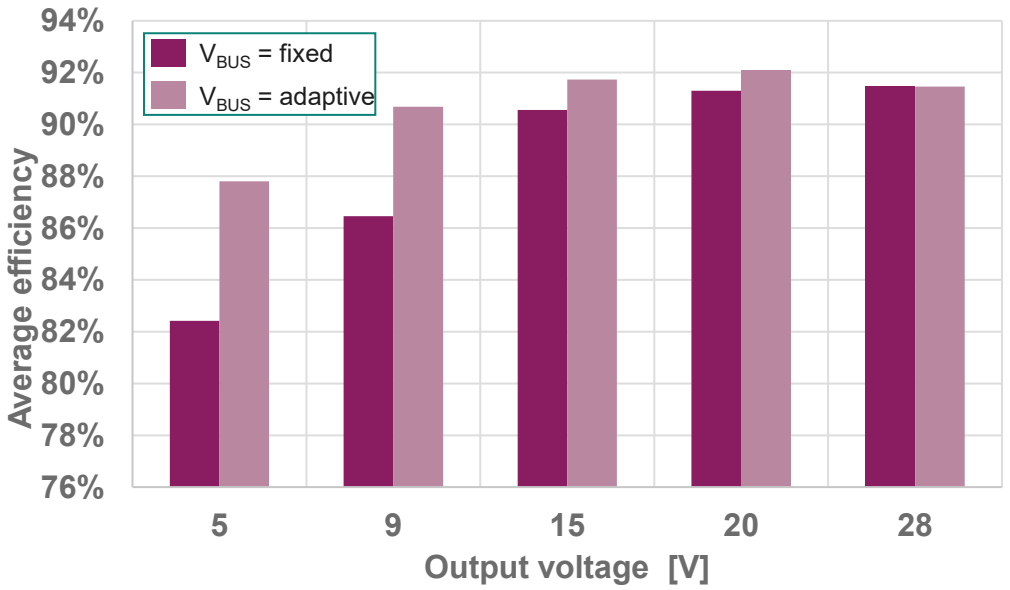

V_{AC} = 230 V / 50 Hz

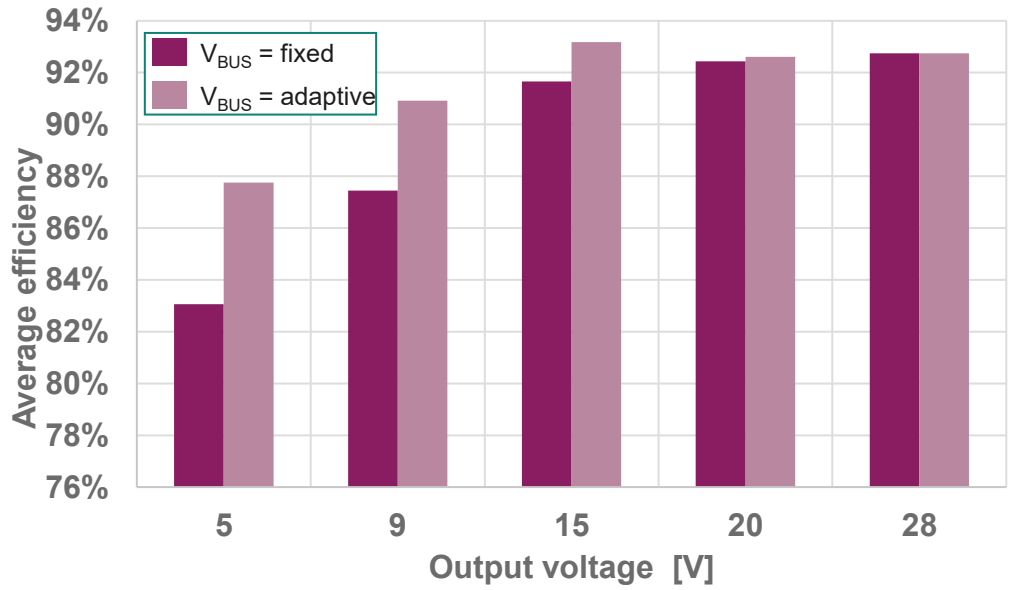

→ **Adaptive bus voltage target level can greatly improve average efficiency in case of low output voltages**

Copyright © Infineon Technologies AG 2025. All rights reserved.

E-series Hybrid Flyback Controller Family

Ease of Use enablement

E-series Hybrid Flyback Controller Family
Ease of Use Enablement

1) Low number of configurable parameters

Hybrid Flyback controller comes with default parameter set:

- XDPS2221E: used for the 120 W evaluation board
- XDPS2201E: used for the 170 W reference board

Offering flexibility with:

- Basic parameters for system adjustments
- Advanced parameters to fine tune the performance

2) Design Tool

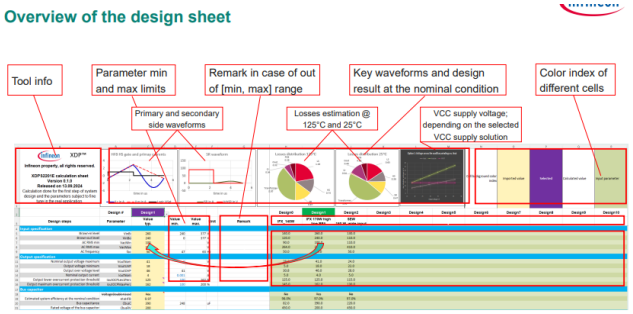

3) System Design Guide

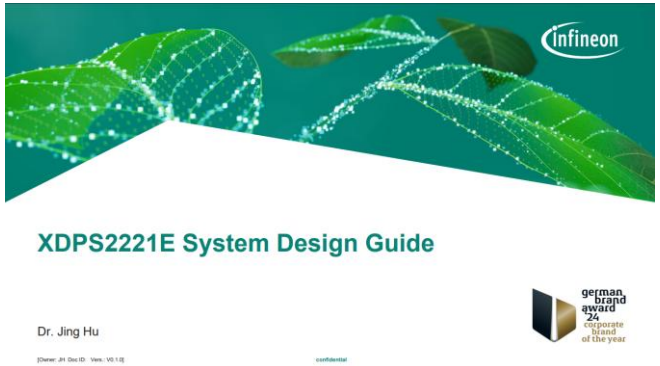

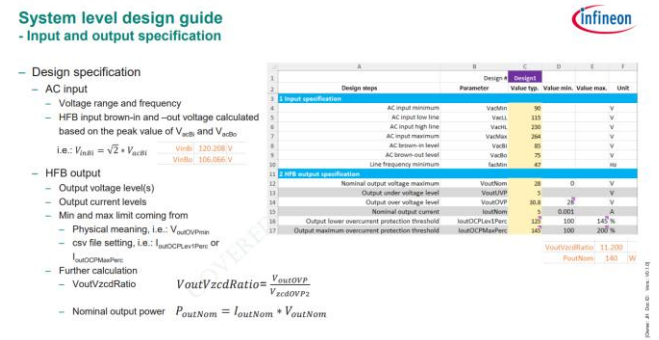

Copyright © Infineon Technologies AG 2025. All rights reserved.

E-series Hybrid Flyback Controller Family
Design Tool Overview

Primary and secondary side waveforms

VCC supply voltage

XDP™

Infineon property, all rights reserved.

XDPS2201E calculation sheet
Version 0.1.0
Released on 13.09.2024
Calculation done for the first step of system design and the parameters subject to fine tune in the real application.

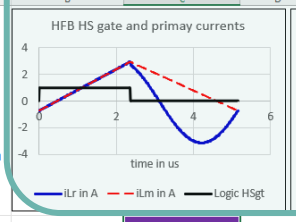

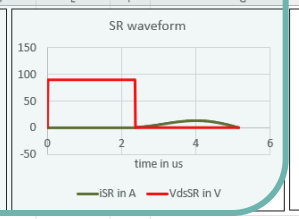

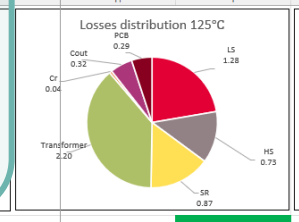

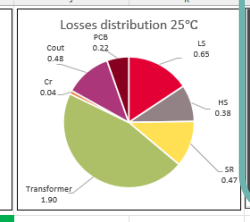

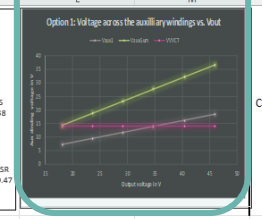

													Cell background color index	Imported value	Selected	Calculated value	Input parameter
	Design #	Design1					Design0	Design1	Design2	Design3	Design4	Design5	Design6	Design7	Design8	Design9	Design10
Design steps	Parameter	Value typ.	Value min.	Value max.	Unit	Remark	IFX_140W	IFX 170W high line BPA	SEW 150 W, wide input								
Input specification																	
Brown-in level	VinBi	260	240	377	V		140.0	260.0	130.0								
Brown-out level	VinBo	240	0	377	V		120.0	240.0	110.0								
AC RMS min	VacMin	100			V		90.0	100.0	110.0								
AC RMS max	VacMax	264			V		264.0	264.0	410.0								
AC frequency	fac	50	47	63	Hz		50.0	50.0	50.0								
Output specification																	
Nominal output voltage maximum	VoutNom	41	0		V		28.0	41.0	24.0								
Output voltage minimum	VoutUVP	18			V		5.0	18.0	22.0								
Output over voltage level	VoutOVP	46	41		V		30.8	46.0	28.0								
Nominal output current	IoutNom	4	0.001		A		5.0	4.0	5.0								
Output lower overcurrent protection threshold	IoutOCPLev1Perc	125	100	162	%		125.0	125.0	115.0								
Output maximum overcurrent protection threshold	IoutOCPMaxPerc	162	100	200	%		145.0	162.0	130.0								
Bus capacitor																	
	~~VoltageDoublerUsed~~	~~Yes~~					~~No~~	~~Yes~~	~~No~~								
Estimated system efficiency at the nominal condition	etaHFB	0.97					98.0%	97.0%	97.0%								
Bus capacitance	CbusC	390	248		uF		82.0	390.0	220.0								
Rated voltage of the bus capacitor	CbusRV	200					450.0	200.0	450.0								

Parameters ← **Input**

Copyright © Infineon Technologies AG 2025. All rights reserved.

E-series Hybrid Flyback Controller Family

Reference Solutions

E-series Hybrid Flyback Controller Family
120 W 3-port USB-PD XDPS2221E evaluation board

120 W USB-PD

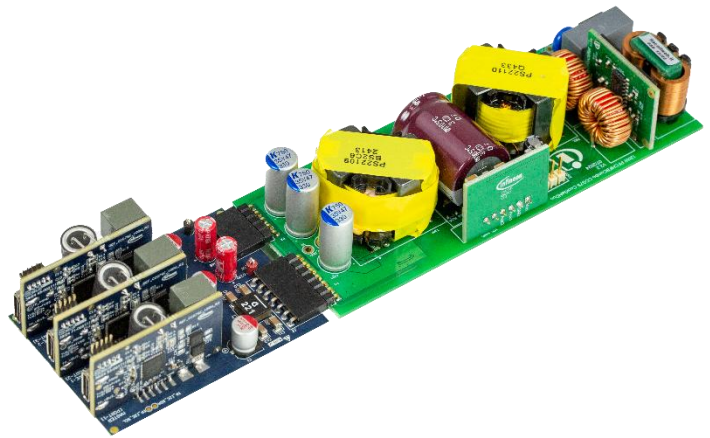

Technical details

Parameter	Value
Input voltage	90 – 264 $V_{AC,rms}$
Input Specification	Harmonics: EN 61000-3-2 Standby: 52 mW with 1C
Output voltage / current	3-port, max. 120 W each USB-PD 5 V…20 V
Maximum nominal power	120 W
Peak efficiency	95.5%
Dimensions	178 mm x 45 mm x 25 mm
Protections	Input: BI/BO Output: short circuit, OCP, OVP

Infineon components	
Primary PWM controller	XDPS2221E (PFC + HFB)
Active Bridge	4 x IPL60R085P7
PFC switch	GSD1623-N1
Half-bridge	IGI65D1414A3M
Sync.-Rectification	BSC034N10LS5
Buck-Switch	3 x BSZ063N04LS6
Bypass-Safety	3 x BSZ063N04LS6
PD-Control	3 x CYPD7171-40LQXQ

Features

- PFC + Hybrid-flyback + DC/DC-Buck for **3-port USB-PD**
- Daughter-boards: Active rectifier bridge, DC/DC-buck
- **Compliance to DoE Level VII** - 52 mW standby power consumption with 1C

Benefits

- Minimized standby power consumption and maximized efficiency
- Scalability from single port to multi port solutions

Copyright © Infineon Technologies AG 2025. All rights reserved.

120 W 3-port USB-PD XDPS2221E evaluation board
Measurement results

Evaluation board w. 3-port daughter board



Parameter	Value
AC input	90 … 264 $V_{AC,rms}$, 50/60 Hz
DC output voltage/current	5 … 20 V / 5.0 A (per port)
Nominal power	120 W (100W_{max} per port) with dynamic load sharing
Peak efficiency	94.6 %

Efficiency vs. Load

$V_{ac,rms}$ = 115 V

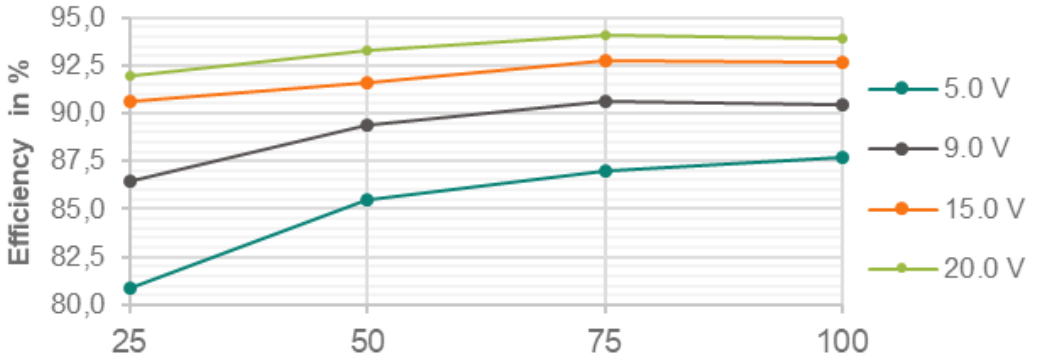

$V_{ac,rms}$ = 230 V

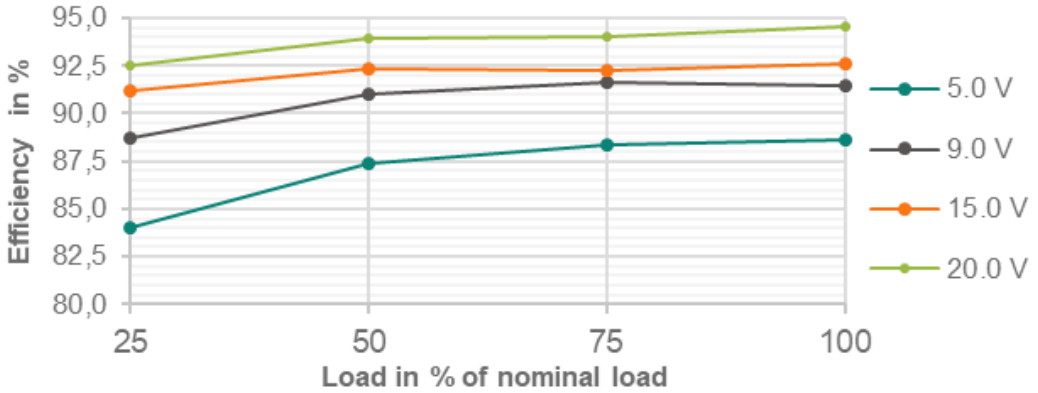

Copyright © Infineon Technologies AG 2025. All rights reserved.

120 W 3-port USB-PD XDPS2221E evaluation board
Measurement results

Average efficiency incl. DOE Level VII limits

$V_{ac,rms}$ = 115 V

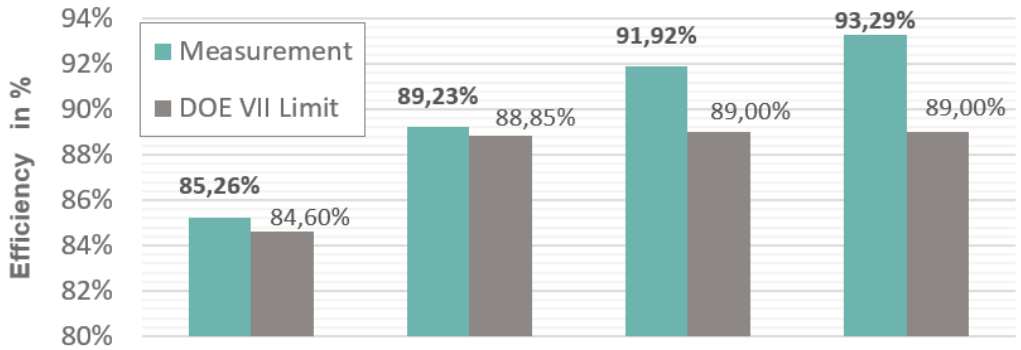

$V_{ac,rms}$ = 230 V

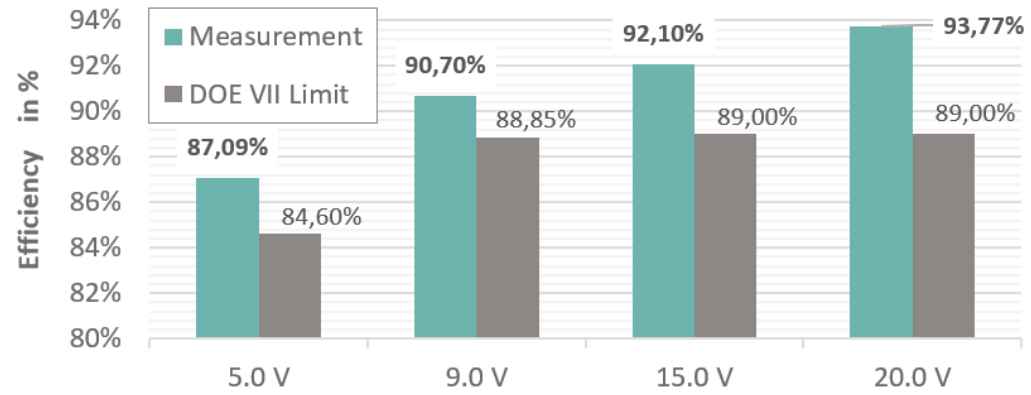

Tiny load efficiency (incl. typical limits)

V_{out} = 20 V (at different load conditions)

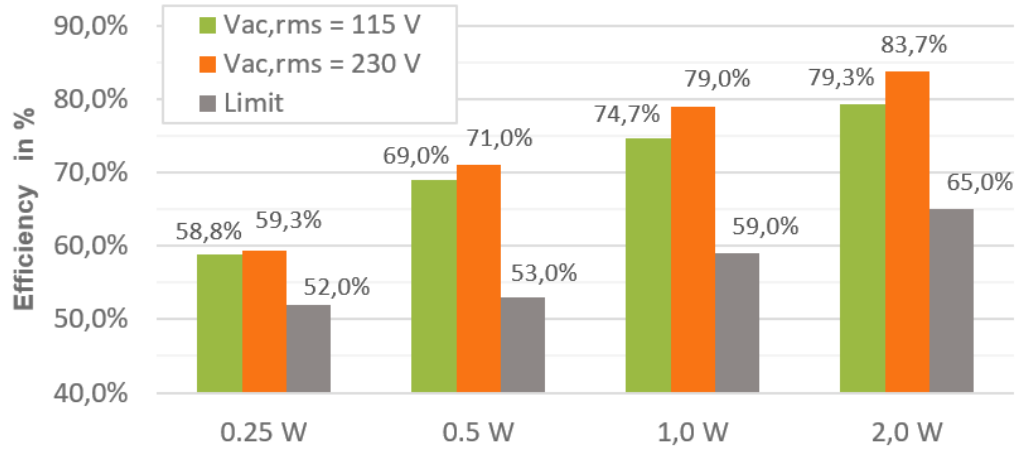

No load power consumption

		$V_{ac,rms}$ = 115 V	$V_{ac,rms}$ = 230 V
Total no-load input power	with 3-port USB-PD	55 mW	72 mW
	with 1-port USB-PD	49 mW	57 mW

Copyright © Infineon Technologies AG 2025. All rights reserved.

E-series Hybrid Flyback Controller Family
170 W Hybrid Flyback with XDPS2201E reference board

170 W Battery Charger

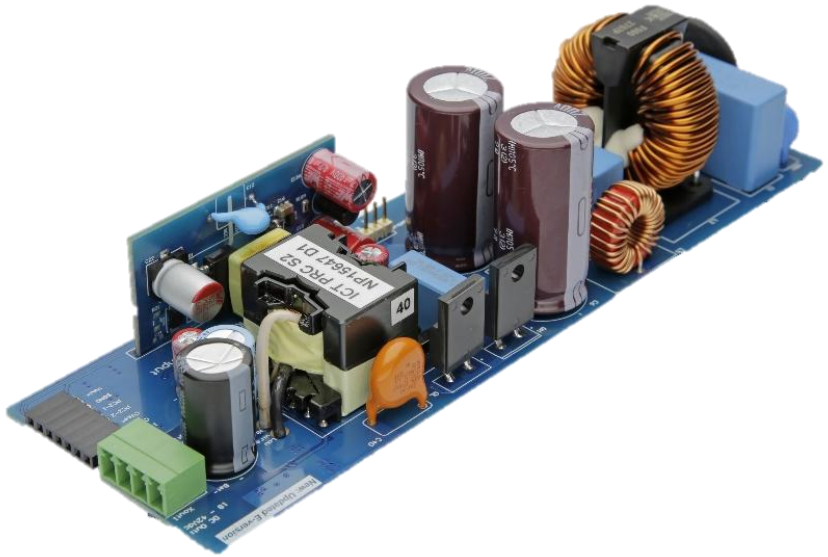

Technical details

Parameter	Value
Input voltage	100 – 130 $V_{AC,rms}$ 198 – 264 $V_{AC,rms}$
Output voltage / current	18 - 42 V / 4 A
Maximum nominal power	170 W
Peak efficiency	95%
Dimensions (uncased)	170*55.5*27 mm³

Infineon components	
Primary PWM controller	XDPS2201E
PWM switch	2x CoolMOS™ IPA60R280P7S
Secondary SR MOSFET	OptiMOS-5 BSC160N15NS5
Optional auxiliary supply:	CoolSET™ 5th Gen.

Features

- Wide output voltage range, high efficiency
- Control Interface for constant current set-point adjustment (0 to 3.3 V signal) and for constant voltage set-point (0 to 3.3 V signal optionally)
- **Application: eBike charger / Power tool charger**

Benefits

- High efficiency, low system cost single stage design
- Flexible but cost optimized design due to input voltage doubler
- No PFC, no auxiliary supply, low system cost

Copyright © Infineon Technologies AG 2025. All rights reserved.

170 W Hybrid Flyback with XDPS2201E reference board Measurement results

Efficiency vs. load and average efficiency

V AC (V_{RMS})	Output load (V)	I_{out} (A)	I_{out} (%)	Efficiency	Average efficiency
115	42	1.00	25	92.1	**93.4**
		2.00	50	93.5	
		3.00	75	93.7	
		4.00	100	93.8	
230	42	1.00	25	92.2	**94.0**
		2.00	50	94.2	
		3.00	75	94.7	
		4.00	100	95.0	

Efficiency during battery charging cycle

Charging behavior of a 40 V li-ion battery pack

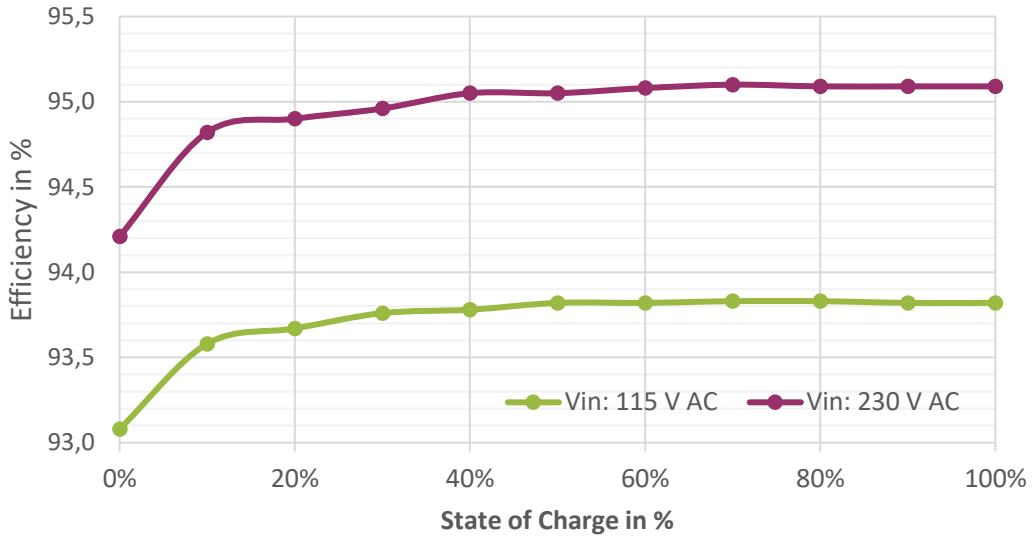

Copyright © Infineon Technologies AG 2025. All rights reserved.


infineon