

CoolSiC™ G2 MOSFETs 400 V / 440 V

Introduction

Restricted

CoolSiC™ G2 MOSFETs 400 V / 440 V extending the overall portfolio offering from Infineon to set new standard in the power conversion market



Industrial grade							
package options / voltages	CoolSiC™ Diode	CoolSiC™ Hybrid		CoolSiC™ MOSFET			
	Discrete	Discrete	Module	Discrete	IPM	Module	HP Module
					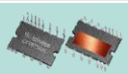		
400 V / 440 V							
600 V							
650 V							
750 V							
1200 V							
1700 V							
2000 V							
3300 V							
Continuous extension of portfolio							

G1 mass production | G2 mass production | G2 in development

Copyright © Infineon Technologies AG 2026. All rights reserved.

CoolSiC™ G2 400 V / 440 V cell is built on continuous technology advancements: an evolutionary next step!

– the 400 V SiC MOSFET cell structure is **based on the design of the higher voltage classes** (as depicted exemplary)

– the significant performance improvements are gained by

  – **reduced cell pitch**

  – **refined channel properties**

  – **enhanced control over drift region** properties

  – **optimization** of chip design to **minimize active area losses**

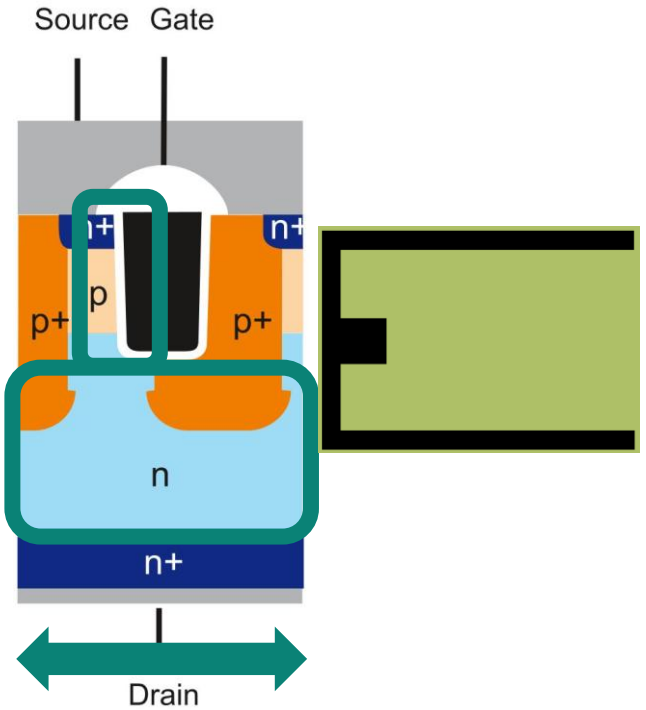

Copyright © Infineon Technologies AG 2026. All rights reserved.

CoolSiC™ G2 MOSFETs 400 V / 440 V
Target applications

A unique combination of performance, reliability and ease-of-use



Target topologies

- ✓ 3 level flying capacitor CCM TP PFC
- ✓ T type NPC2
- ✓ 3L ANPC inverter
- ✓ B6
- ✓ Solid state switch

Motivation

– There is a sweet spot between the 200 V Si MOSFET and 650 V CoolSiC™ MOSFET to maximize the efficiency and power density, with **right sizing** the 400 V_{DS} and 440 V_{DS} CoolSiC™ MOSFET

Product description

– 400 V_{DS} comes in D^2PAK, TOLL, TOLT and TO247 variants, while the 440 V V_{DS} is introduced in TOLL

– Offering **best value** with ultra-low switching losses and on-state resistance at lowest CoolSiC™ price position

Copyright © Infineon Technologies AG 2026. All rights reserved.

CoolSiC™ G2 MOSFETs 400 V / 440 V
A unique combination of performance, reliability and ease-of-use

Highest efficiency and power density	Enabling the adoption of **innovative topologies** (e.g. 3L PFC, ANPC)
System cost/performance optimisation	**R_{on} x A reduction** and **FoM improvement** over existing solutions, **flat $R_{DS,on}$ vs T_j** characteristics with minimal increase at 100°C
Fast-switching capability	**low Q_{gd}, Q_{oss}, Q_{fr}, E_{oss}**
Low EMI	**High slew rate control, C_{oss} linearity and low Q_{fr}**
Easy unipolar gate driving	**0 V – 18 V / 15 V gate-driving voltage** enabled by a high $V_{th,typ}$ = 4.5 V, and a low Miller ratio to mitigate $C_{gd}V_{ds}$/dt induced parasitic turn-on

Copyright © Infineon Technologies AG 2026. All rights reserved.

CoolSiC™ G2 MOSFETs 400 V / 440 V
Industrial grade

V_{BRDSS}	400 V		440 V	400 V		
$R_{DS(on)}$ typ @18V [mΩ]	D²PAK-7p Source-Sense 	TOLL Source-Sense 	TOLL Source-Sense 	TO-247-3 	TO-247-4 	TOLT 
45	IMBG40R045M2H	IMT40R045M2H		IMW40R045M2H	IMZA40R045M2H	IMLT40R045M2H
36	IMBG40R036M2H	IMT40R036M2H		IMW40R036M2H	IMZA40R036M2H	IMLT40R036M2H
25	IMBG40R025M2H	IMT40R025M2H	IMT44R025M2H	IMW40R025M2H	IMZA40R025M2H	IMLT40R025M2H
15	IMBG40R015M2H	IMT40R015M2H	IMT44R015M2H	IMW40R015M2H	IMZA40R015M2H	IMLT40R015M2H
11	IMBG40R011M2H	IMT40R011M2H	IMT44R011M2H	IMW40R011M2H	IMZA40R011M2H	IMLT40R011M2H

Target topologies

- ✓ 3 level flying capacitor CCM TP PFC
- ✓ T type NPC2
- ✓ 3L ANPC inverter
- ✓ B6
- ✓ Solid state switch
- ✓ Class-D audio

Benefits

- ✓ Reduced power losses
- ✓ **Lower price over 650 V alternatives**
- ✓ Superior energy efficiency and power system density
- ✓ High slew rate control, C_{oss} linearity and low Q_{fr}
- ✓ 440 V TOLL option to comply with IPC-9592B derating guidelines

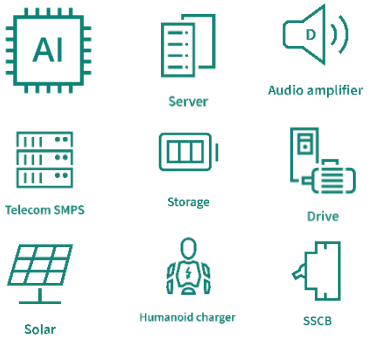

Copyright © Infineon Technologies AG 2026. All rights reserved.



CoolSiC™ G2 MOSFETs 400 V / 440 V

Device performance

Restricted

What makes the 400 V SiC MOSFETs so special?
Super low FoMs and $R_{DS(on)}$ behaviour over temperature to achieve ...

… the highest efficiency and power density!
… at lowest price!

Switching losses

Normalized switching Figures of Merit (FoMs)

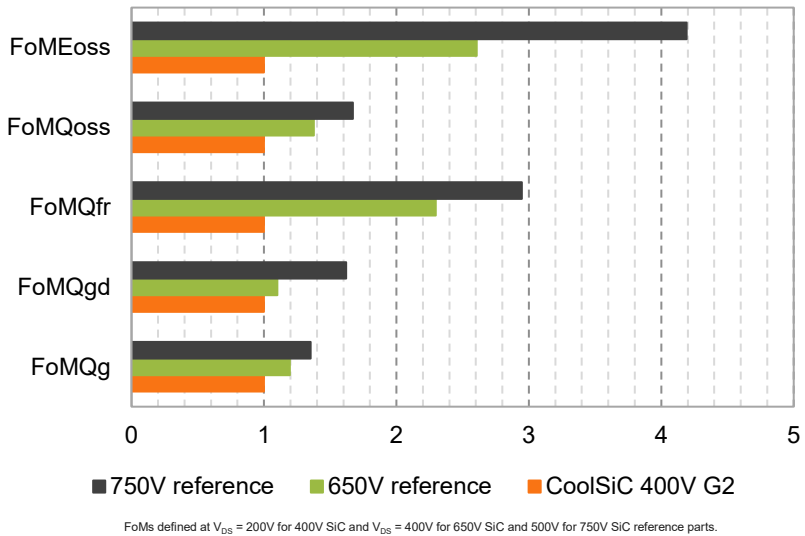

FoMs defined at V_{DS} = 200V for 400V SiC and V_{DS} = 400V for 650V SiC and 500V for 750V SiC reference parts.

Conduction losses

Normalized $R_{DS(on)}$ vs T_j

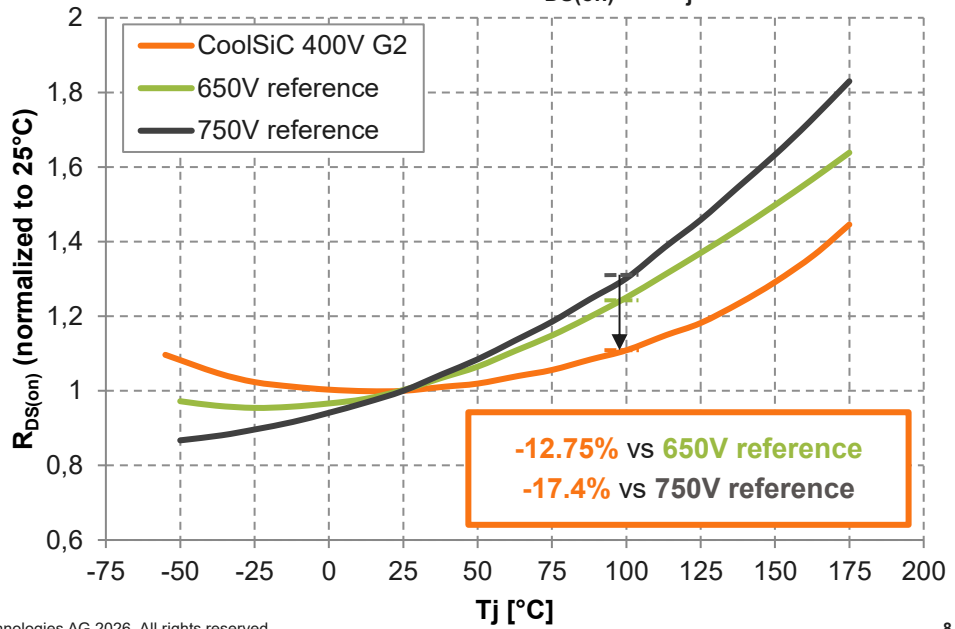

Copyright © Infineon Technologies AG 2026. All rights reserved.

Commutation robust body diode optimized for hard and soft switching applications

IMT40R011M2H: Double-pulse-test characterization of the body diode

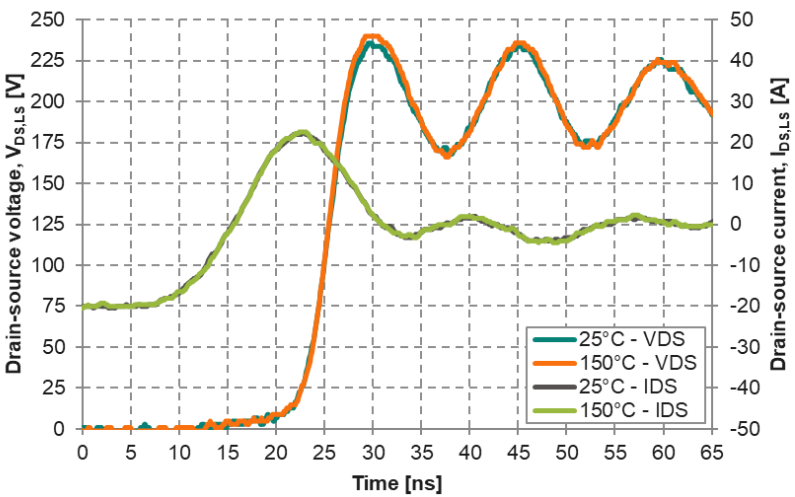

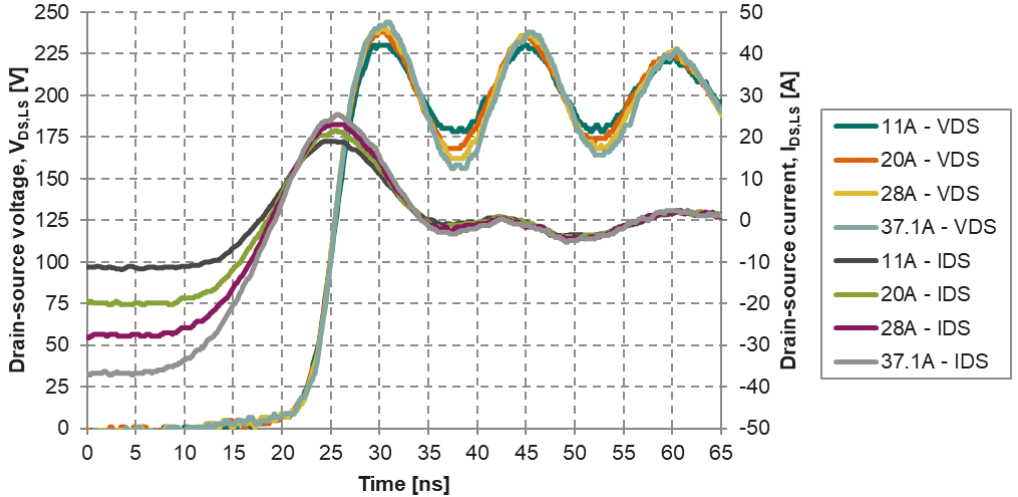

- The **body diode is commutation robust** with very low bipolar charges Q_{bip} even at high di/dt conditions that are seen in SMPS applications. The measurement of Q_{fr} includes Q_{oss}, which doesn't contribute to losses.
- The switching waveforms show **negligible dependence on the operating temperature and load current**. This shows the commutation robustness of the body diode.

Copyright © Infineon Technologies AG 2026. All rights reserved.

Flexible use of Kelvin/Power Source-pins in low-inductance packages with unipolar gate driving

Using KelvinSource

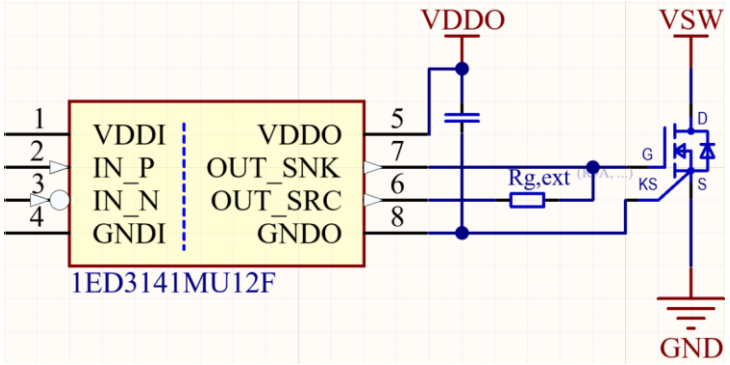

Using PowerSource

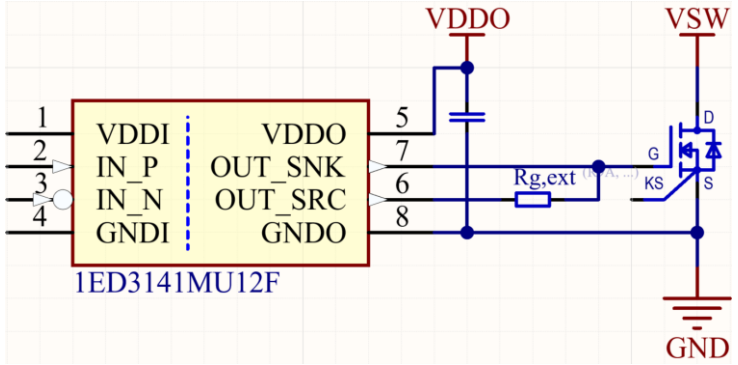

- **KelvinSource** gate drive offers the fastest switching performance for the lowest switching losses.
- **Low source-inductance offered by the TOLL package** ensures minimal impact in switching losses even when using **PowerSource**.
- Flexibility to use **KelvinSource** or **PowerSource** to **optimize switching performance and EMI signature** for all layout designs.
- **Easy unipolar gate driving (0 V – 18 V)** is enabled by a high $V_{th,typ}$=4.5 V, and **a low Miller ratio** to avoid $C_{gd}V_{ds}$/dt induced parasitic turn-on.
- **Fast-switching capability** (low Q_{gd}, Q_{oss}, Q_{fr}) enables higher f_{sw} with reduced dead-time, higher power density and higher efficiency.

Copyright © Infineon Technologies AG 2026. All rights reserved.

Excellent controllability of switching speed to optimize switching performance (efficiency) and EMI signature

IMT40R011M2H: Effect of using KelvinSource vs PowerSource and varying $R_{g,ext}$

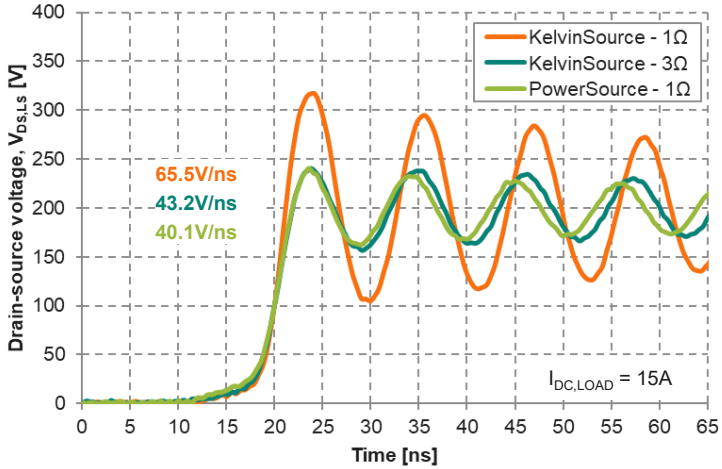

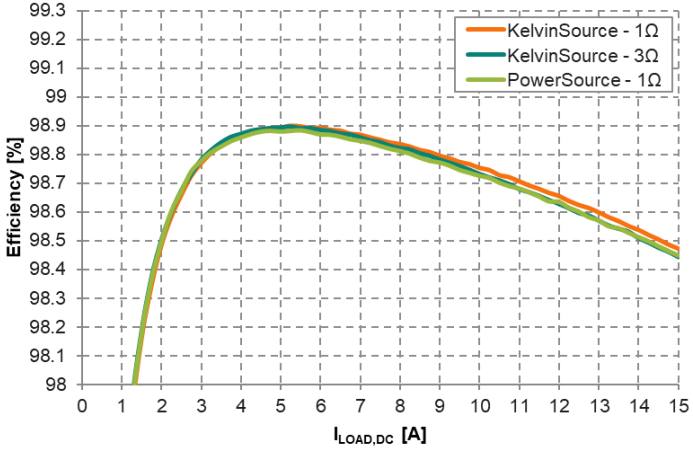

Test conditions:
Half-bridge in buck-mode
"L"-layout with L_{loop} = ~8 nH
$V_{DC,IN}$ = 200 V
V_{LOAD} = 100 V
f_{sw} = 65 kHz
$V_{gs,drv}$ = 18 V/0V
$R_{g,ext}$ = variable

- **Low source-inductance offered by the TOLL package** ensures minimal impact in switching losses even when using **PowerSource.**
- High **C_{oss} linearity** and **a robust body diode with low Q_{fr}** help mitigate V_{DS} overshoots and ringing, enabling **80% derating** even at high switching speeds with low $R_{g,ext}$ when using the best-in-class $R_{ds,on}$ part.
- The excellent switching FoMs (Q_{gd}, Q_{oss}, Q_{fr}) translate to high switching speeds resulting in **minimized switching and dead-time losses.**
- This translates to system level improvement in **efficiency and power density with good EMI performance.**

Copyright © Infineon Technologies AG 2026. All rights reserved.

Excellent controllability of switching speed to optimize switching performance (efficiency) and EMI signature

IMT40R045M2H: Effect of using KelvinSource vs PowerSource and varying $R_{g,ext}$

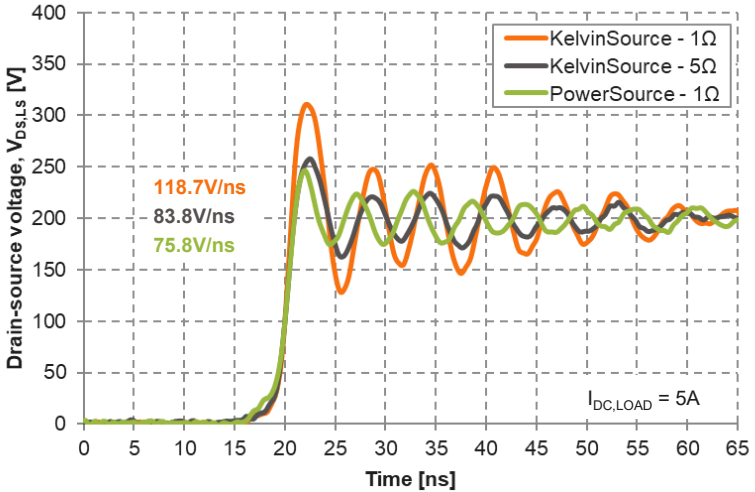

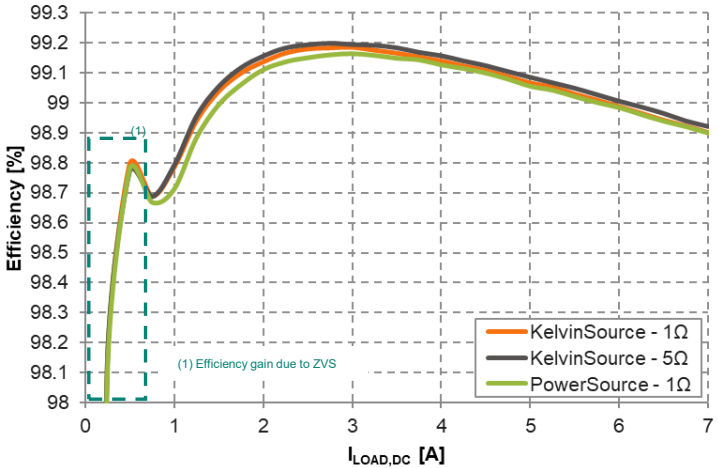

Test conditions:
Half-bridge in buck-mode
"L"-layout with L_{loop} = ~8nH
$V_{DC,IN}$ = 200 V
V_{LOAD} = 100 V
f_{sw} = 65 kHz
$V_{gs,drv}$ = 18 V/0 V
$R_{g,ext}$ = variable

- **Low source-inductance offered by the TOLL package** ensures minimal impact in switching losses even when using **PowerSource.**
- The excellent switching FoMs (Q_{gd}, Q_{oss}, Q_{fr}) translate to high switching speeds resulting in **minimized switching and dead-time losses.**
- Despite the **high switching speeds >100 V/ns**, the switching performance is robust with low $V_{DS,pk}$ enabling **80% derating**.
- This translates to system level improvement in **efficiency and power density with good EMI performance.**

Copyright © Infineon Technologies AG 2026. All rights reserved.



CoolSiC™ 400 V G2

Focus Application: AI Server PSUs

Restricted

Reference Board

3.3kW PSU with 3-Level Flying Capacitor CCM Totem Pole PFC

REF_3K3W_3LFC_PSU

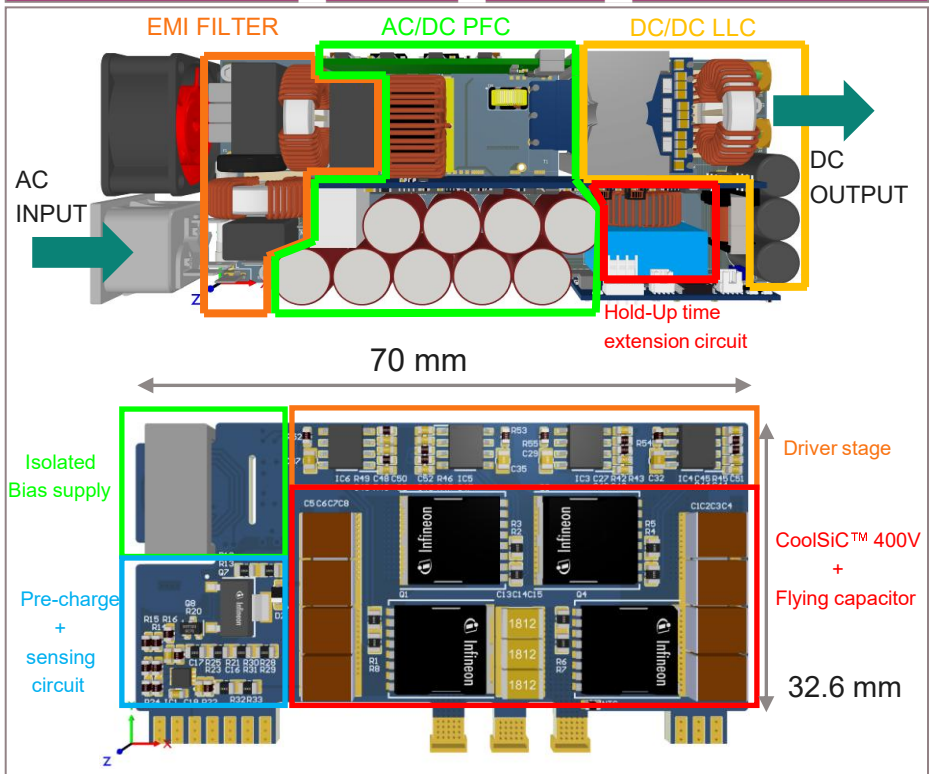

Technical details	
Target applications	Server/Datacenter, Telecom
Input voltage range	180 V – 265 V
Output voltage range	51 – 49 V
Output current nominal	@51 V=65 A, @50 V=66 A @48 V=69 A
Output power max	3300 W
Peak efficiency (PFC[1] / PSU[2])	99.15% / 97.52% @ 230 V || 99.26% / 97.64% @ 265 V || 98.94% / 97.25% @ 180V
Topology	3-level flying capacitor CCM bridgeless totem pole PFC + half-bridge high-freq LLC
Additional technical parameter	1U height, >100 W/in^3

Highlights and key information	
Infineon components	IMT40R025M2H, IPT60R022S7, IGT60R042D1, 1EDB9275F, 1EDB8275F, 2EDN7533B, 1EDN8511B, 1EDN8550B, ICE2QR2280G, BAT46WJ, BAT165, BSS128N, IPN60R3K4CE, TLS4120D0EPV33, TLS820D0ELV33, 4DIR1400H, XMC4200
Infineon hero part	IMT40R025M2H – CoolSiC™ G2 400 V
Timeline for availability (Quarter [year])	Hardware: Q4 CY24 Documentation: Q4 CY24 Available for market (ISaR): Available now!

Features & Benefits

- High-efficiency PSU (97.52%[2] peak) @ >100 W/in^3 in 1U form factor
- **Benchmark** to REF_3K3W_HFHD_PSU: efficiency, EMI, PFC choke reduction.
- **Startup, FC-precharging and voltage balancing, isolated gate drive**
- Full digital control (PFC and DCDC) supporting **dynamic tests**, **hold-up time extension** using baby-boost (line-cycle drop-out).
- Full Infineon semiconductor solution: CoolMOS™, CoolSiC™, CoolGaN™
- Improved ease of measurements

1) PFC efficiency including all aux- supply power (except fan) and EMI filter losses.
2) Full-PSU efficiency including fan power consumption.

Copyright © Infineon Technologies AG 2026. All rights reserved.

Key target application: AI Servers/Datacenter and Telecom Rectifiers

Covering OCP ORV3 HPRx, MCRPS compliant PSUs between 3.3 kW – 12 kW: case study of 3.3 kW CCM PFCs

REF_3K3W_HFHD_PSU (2 x 2L PFC)

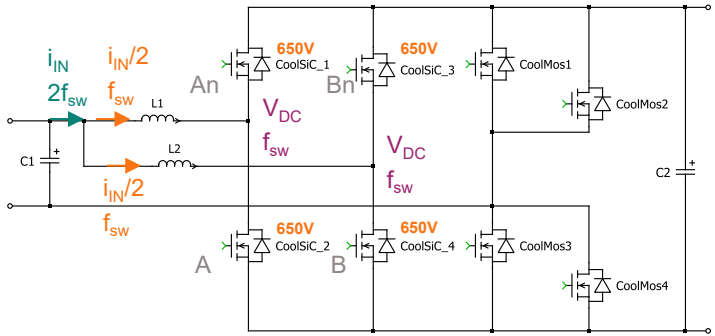

REF_3K3W_3LFC_PSU (1 x 3LFC PFC)

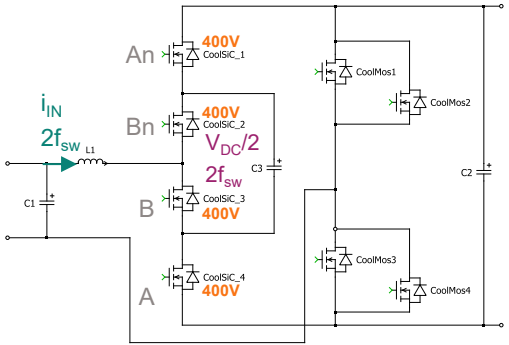



- **2 x 2L interleaved:**
  - 4 x **CoolSiC™ 650 V** – parallel (57 mΩ / R_{dson} ↑)
    - 2 x PWM – 180 deg – f_{sw}
  - **2 x** PFC chokes
    - $i_{AC}/2$ - V_{DC} - f_{sw} → L
    - Total volume similar than single choke
  - Thermal management
    - **Heat spreading**
    - Inductors and Switches share input current
  - 2 x f_{sw} effective input current + Δi reduction
    - **DM EMI reduction** in respect to single choke PFC

- **1 x 3L-FC:**
  - 4 x **CoolSiC™ 400 V** – series (25 mΩ – 35 mΩ / R_{dson} ↓)
    - 2 x PWM – 180deg – f_{sw}
  - **1 x** PFC choke
    - i_{AC} - $V_{DC}/2$ - $2{\cdot}f_{sw}$ → L/4
    - **Magnetic volume / cost reduction ~60%**
    - **Use of low ESR choke**
  - **Increased efficiency** (>0.3% expected @ 230 V)
    - Use of better FOM switches
    - Heat spreading in HF leg MOSFETs
  - 2 x f_{sw} effective input current + Δi reduction
    - **Same DM EMI as interleaved PFC**

Copyright © Infineon Technologies AG 2026. All rights reserved.

Efficiency measurements: 3L FC PSU vs 2L HFHD PSU

	V_{ac} = 180 V	V_{ac} = 230 V	V_{ac} = 265 V
Full PSU	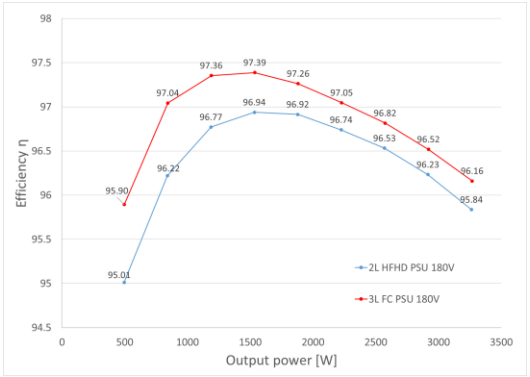	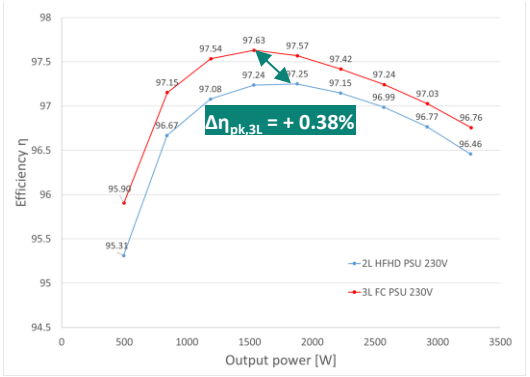	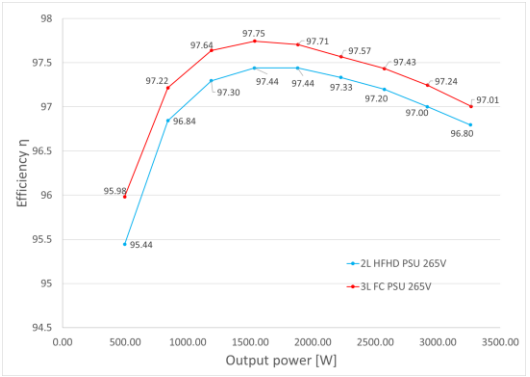
PFC	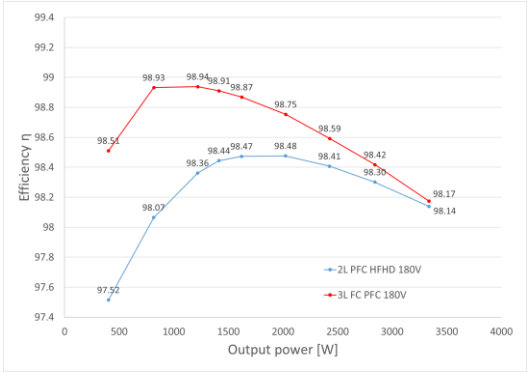	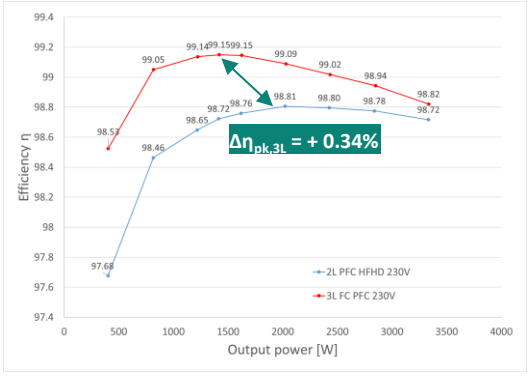	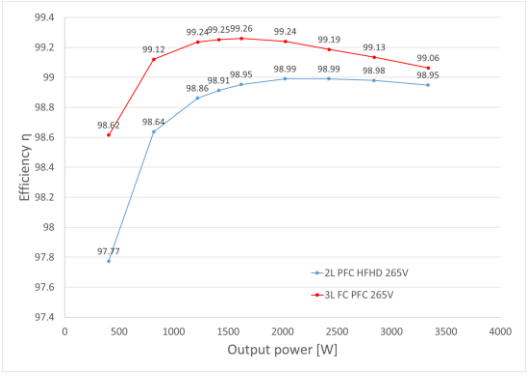

Note: Ext. Fan supplied & Int. Mounted

Copyright © Infineon Technologies AG 2026. All rights reserved.



CoolSiC™ G2 MOSFETs 400 V / 440 V

Target applications and topologies

Restricted

CoolSiC™ G2 MOSFETs 400 V / 440 V
Where does the 400 V CoolSiC™ MOSFET fit?

V_{BUS}		
	3-level topology	≤ 600 V_{DC}
	2-level topology	≤ 300 V_{DC}



Copyright © Infineon Technologies AG 2026. All rights reserved.

CoolSiC™ MOSFETs 400 V / 650 V / 750 V Generation 2
Industrial grade positioning

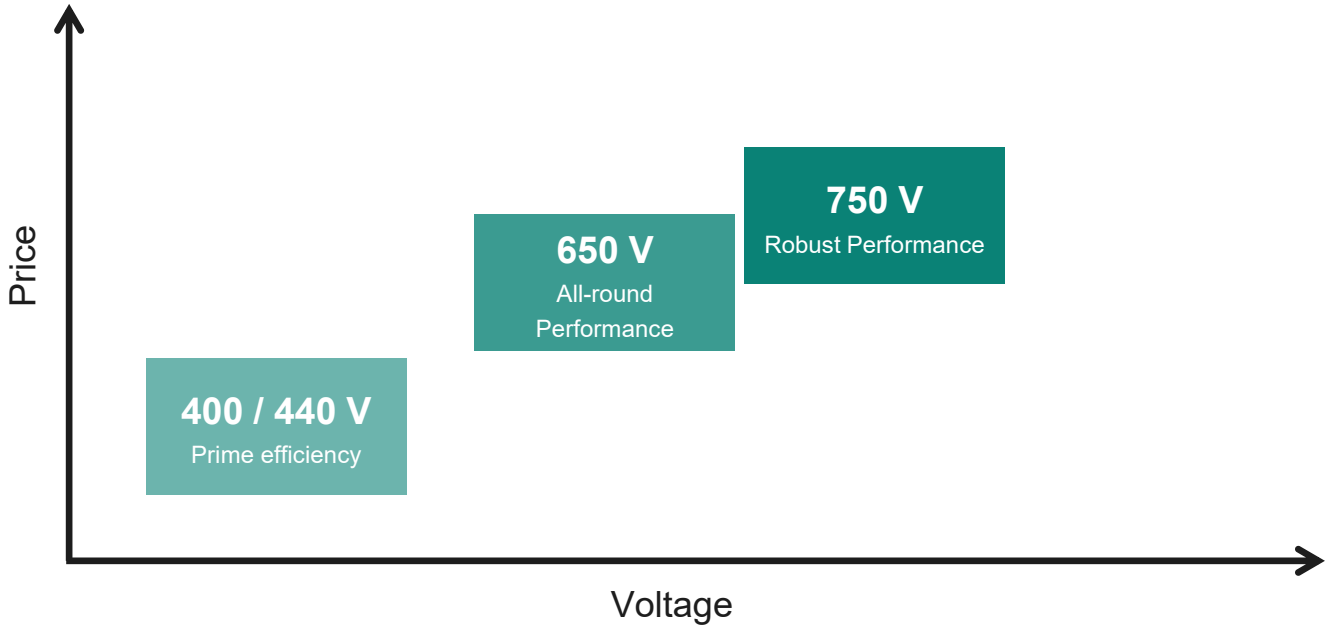

Copyright © Infineon Technologies AG 2026. All rights reserved.

Effectively using the 400 V SiC MOSFET to create value

Understanding your design goals and system operating conditions determines which scenario. Each scenario determines where best to use the 400 V CoolSiC™ MOSFET

Scenario 1: ~300 V_{DC_LINK} plus 600 V / 650 V power switches are currently being used

- 400 V SiC MOSFET as high performance and BOM cost improvement alternative to 600 V / 650 V switches in 2-level topologies
- *Note: 600 V / 650 V switches are not needed resulting in lower performance and high BOM for the customer*

Scenario 2: ~ 600 V_{DC_LINK} with design needing highest efficiency and power density

- 400 V SiC MOSFET as the highest performance and lowest EMI alternative to 600 V / 650 V switches in 3-level topologies
- *Note: The increase in system performance must have a value for the customer to justify the increase in the number of components. Otherwise stay 2-level with 600 V / 650 V MOSFETs*

Copyright © Infineon Technologies AG 2026. All rights reserved.

The positioning and promotion of 400 V SiC relies heavily on the topology and associated input / bus voltage – 2 level topology example

Industrial power supplies
Replacing 200 V or 650 V MOSFETs

Examples

2 level CCM totem-pole PFC



- Excellent hard-switching FoMs
- Better price and performance compared to HV SiC MOSFETs

Synchronous Rectification



- Excellent $R_{ds,on}$ vs T_j stability
- Low Q_{bip} contribution in Q_{rr}

https://products.pulspower.com/en/cp20-481.html
https://products.pulspower.com/en/cs10-243.html

Energy storage Solar SMPS

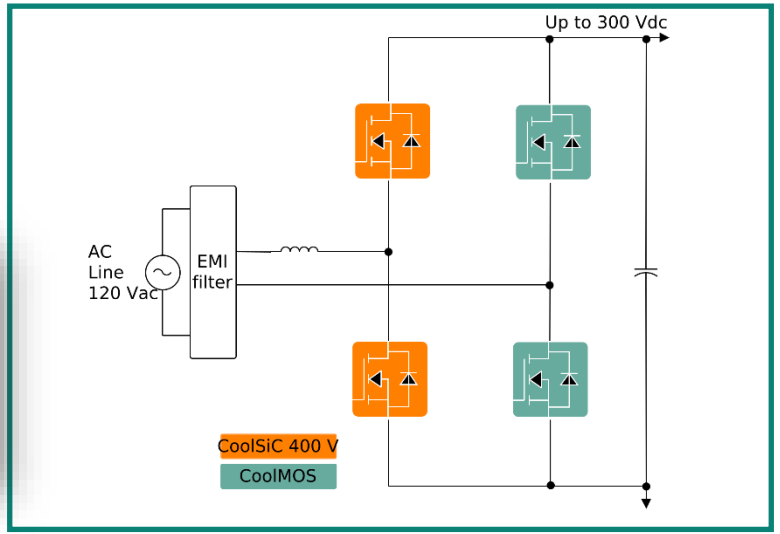

The CoolSiC™ 400 V advantage:

- Higher efficiency
- Higher output power
- Improved thermal performance
- Smaller form factor

Copyright © Infineon Technologies AG 2026. All rights reserved.

Effectively using the 400 V SiC MOSFET to create value

Understanding your design goals and system operating conditions determines which scenario. Each scenario determines where best to use the 400 V CoolSiC™ MOSFET

Scenario 1: < 300 V_{DC_LINK} plus 600 V / 650 V power switches are currently being used

- 400 V SiC MOSFET as high performance and BOM cost improvement alternative to 600 V / 650 V switches in 2-level topologies
- *Note: 600 V / 650 V switches are not needed resulting in lower performance and high BOM for the customer*

Scenario 2: < 600 V_{DC_LINK} with design needing highest efficiency and power density

- 400 V SiC MOSFET as the highest performance and lowest EMI alternative to 600 V / 650V switches in 3-level topologies
- *Note: The increase in system performance must have a value for the customer to justify the increase in the number of components. Otherwise stay 2-level with 600 V / 650 V MOSFETs*

Copyright © Infineon Technologies AG 2026. All rights reserved.

Creating value with CoolSiC™ MOSFET 400 V relies heavily on the topology and associated input / bus voltage – 3 level topology example

3 level ANPC topology example replacing 2 level topology using 650 V MOSFETs

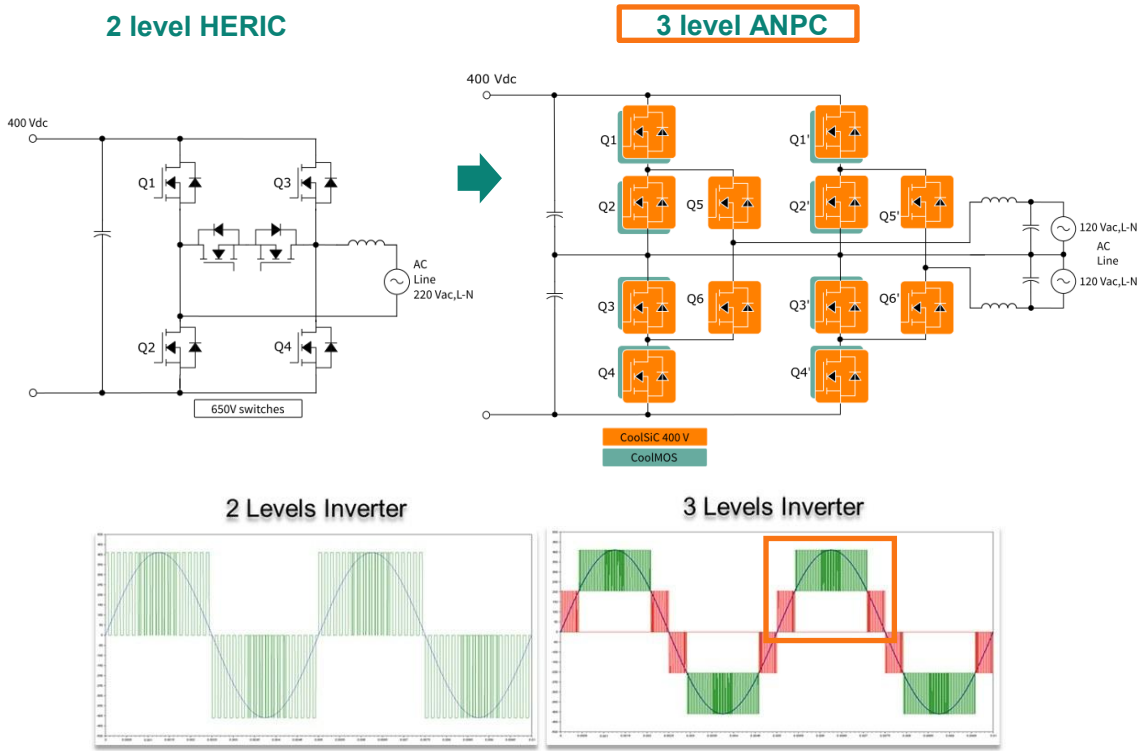

The 3 level advantage using CoolSiC™ 400 V

- Lower voltage rated semiconductors
- Better conduction and switching performance due to lower voltages Improved price position
- Higher efficiency
- Higher output power
- Better EMI performance due to slower dv/dt and three different voltage levels
- Higher power density

Energy storage

Solar

Deepdive Inverters

Copyright © Infineon Technologies AG 2026. All rights reserved.

3L-T-type inverter for single-phase applications

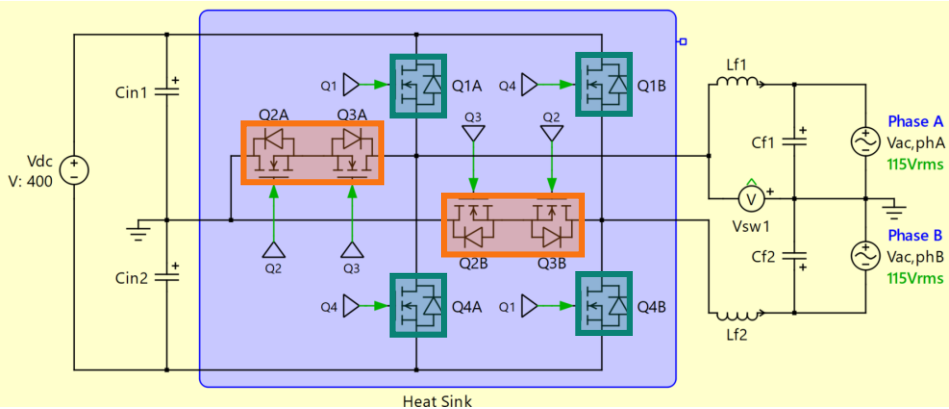

Q1x, Q4x: CoolSiC™ 650 V IMT65R010M2H, high-frequency hard-switching
Q2x, Q3x: CoolSiC™ 400 V IMT40R011M2H, high-frequency bidi. sync. rectification

Key features:

- **3-level output voltage** (+/- V_{dc}/2, 0) at switching node improves AC voltage waveform quality, **reduces THD** and **minimizes filter size**.
- Q1x and Q4x block V_{dc}, but switch only V_{dc}/2 leading to **reduced switching losses**, and **lower EMI**.
- **Fewer components** compared to other multi-level topologies leading to **balanced performance and simplicity**.
- **Split-phase AC output** without subsequent conversion.

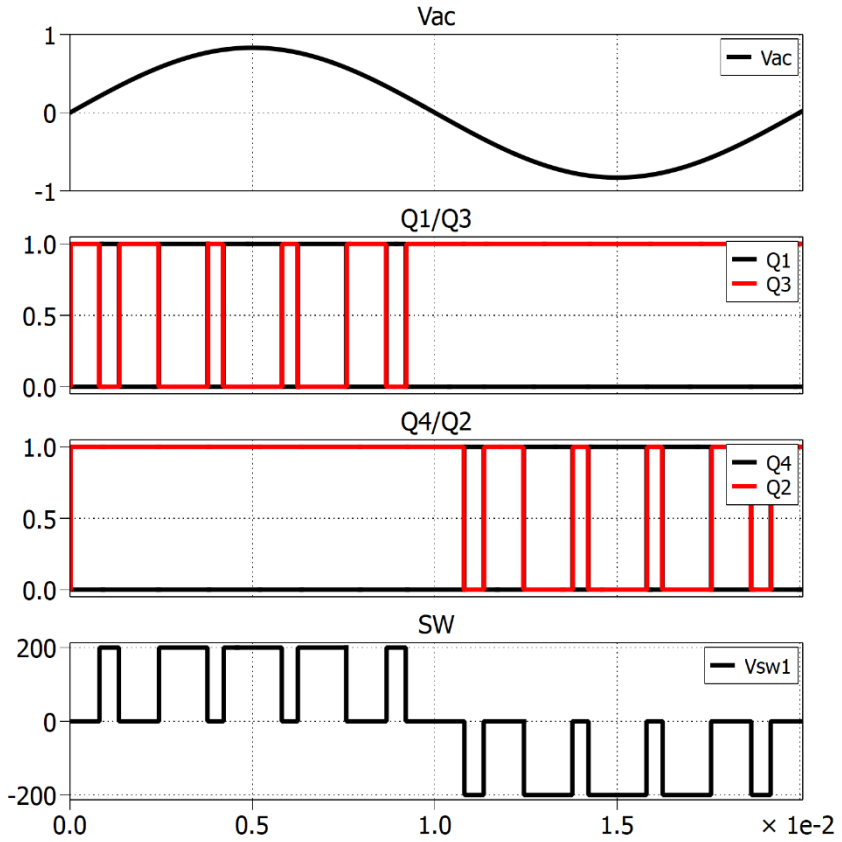

Copyright © Infineon Technologies AG 2026. All rights reserved.

The positioning and promotion of 400 V SiC relies heavily on the topology and associated input / bus voltage – CCM totem-pole example

CCM totem-pole (bi-directional) topology example depending on bus voltages

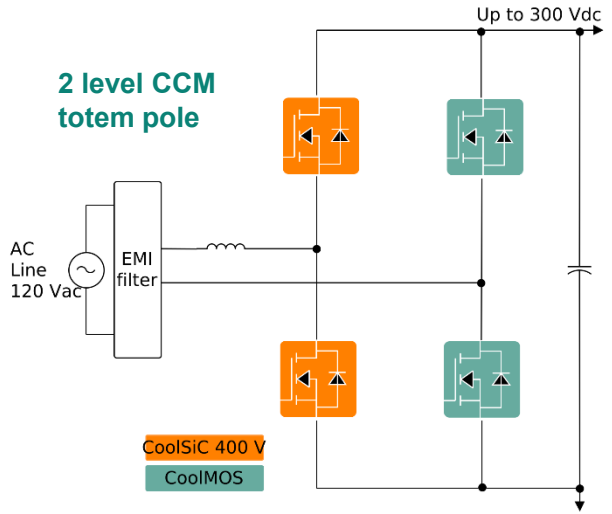

- Excellent hard-switching FoMs.
- Better price and performance compared to HV SiC MOSFETs, in systems where 650 V rating is not needed (e.g. grid connected systems in US, Japan –industrial power supplies, online UPS, MPPT/DC-DC buck/boost…).



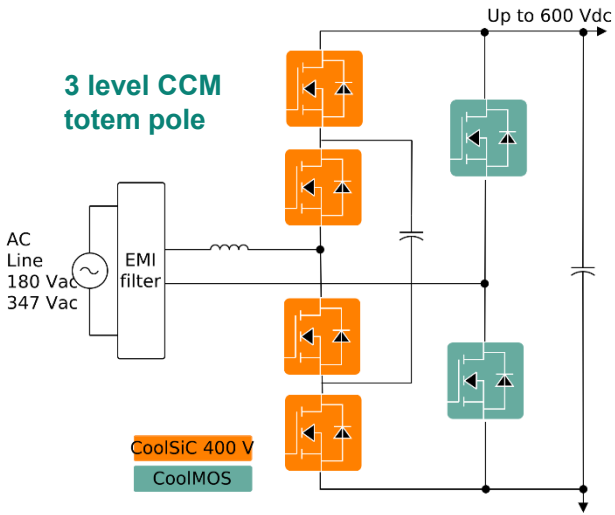

Deepdive AI Servers

- Using lower voltage rated SiC MOSFETs to leverage improved switching and conduction FoMs (e.g. especially in 347 V_{ac} L-N grids like in Canada).
- Highest efficiency and power density.
- Better EMI performance.



Copyright © Infineon Technologies AG 2026. All rights reserved.

CoolSiC™ G2 MOSFETs 400 V / 440 V
Topology indication and associacted applications

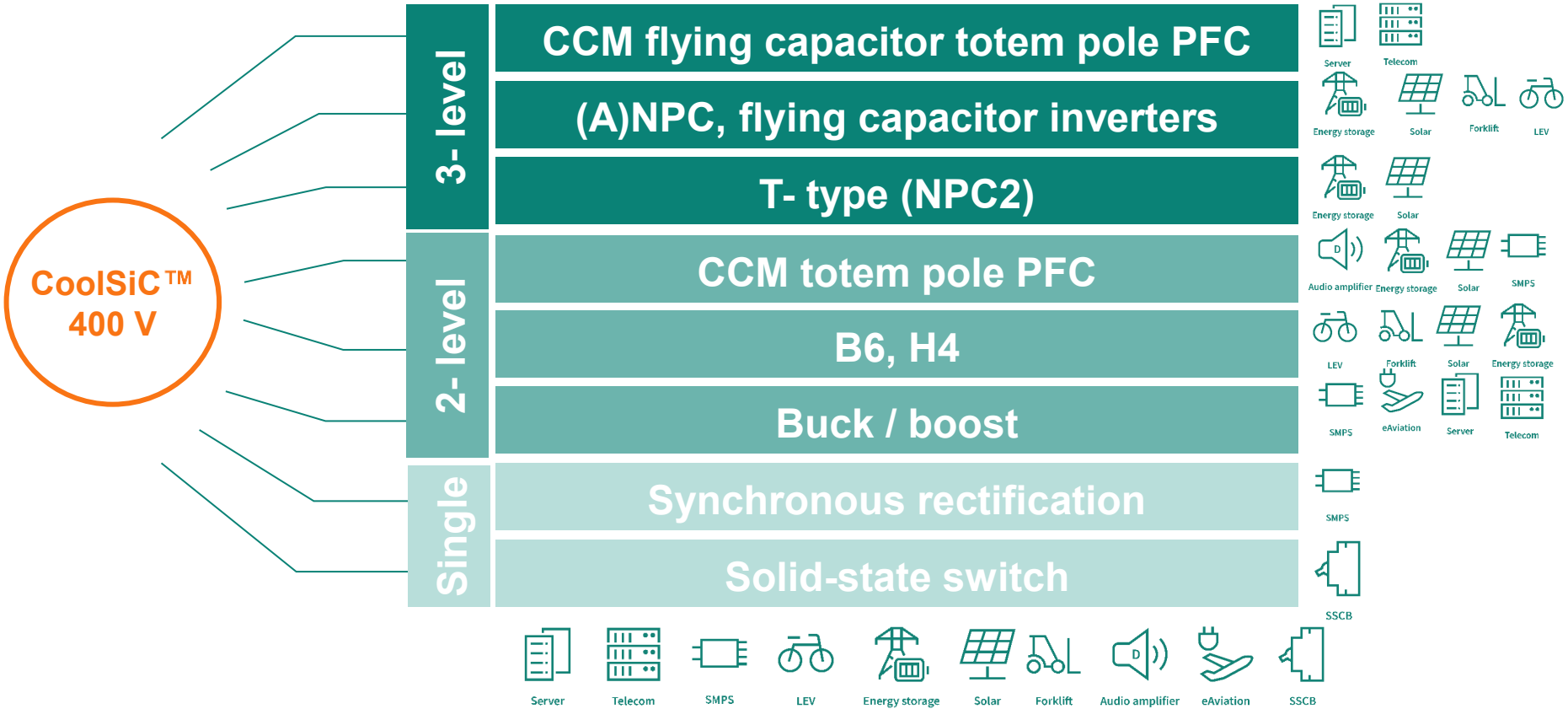

Copyright © Infineon Technologies AG 2026. All rights reserved.



CoolSiC™ G2 MOSFETs 400 V / 440 V

Promotion material and design support

Restricted

Support

Collaterals and brochures	– Product briefs – Selection guides – Application brochures – Presentations – Press releases, ads	https://www.infineon.com/product-information/power/mosfet/silicon-carbide/400v
Technical material	– Application notes – Technical articles – Simulation models – Datasheets, MCDS files – PCB design data	Application Overview Powering AI 99.5% peak efficiency usecase Application Note Top Side Cooling **Application note CoolSiC G2 400 V / 440 V – soon available online!**
Evaluation boards	– Evaluation boards – Demoboards – Reference designs	REF-3K3W-3LFC-PSU EVAL_10KW_3LANPC_SIC usecase for Solar, ESS, motor control inverter EVAL_10KW_B6_SIC400V REF_10KW_3LBUCK_SIC400 – coming soon on ISAR REF_Audio_CoolSiC – coming soon on ISAR
Videos	– Technical videos – Product information videos	Lab session - **3L-FC-TP-PFC**

Copyright © Infineon Technologies AG 2026. All rights reserved.

Online material available on the 400V SiC MOSFET product pages

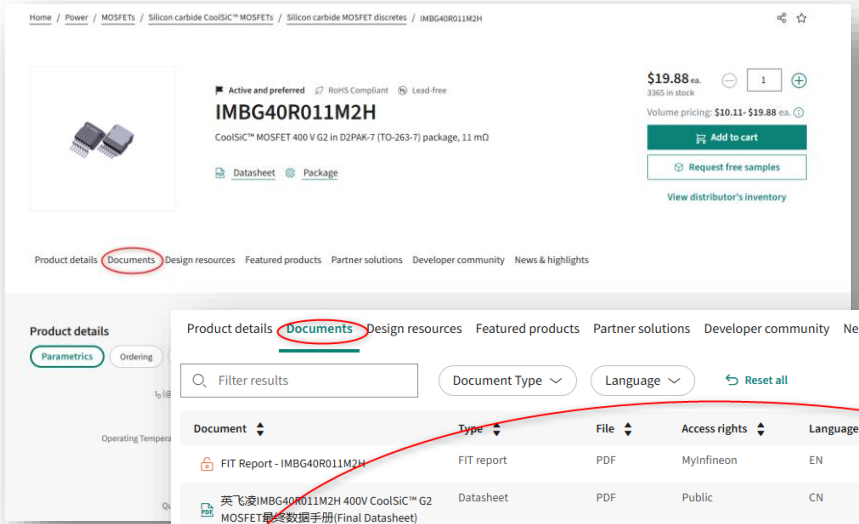

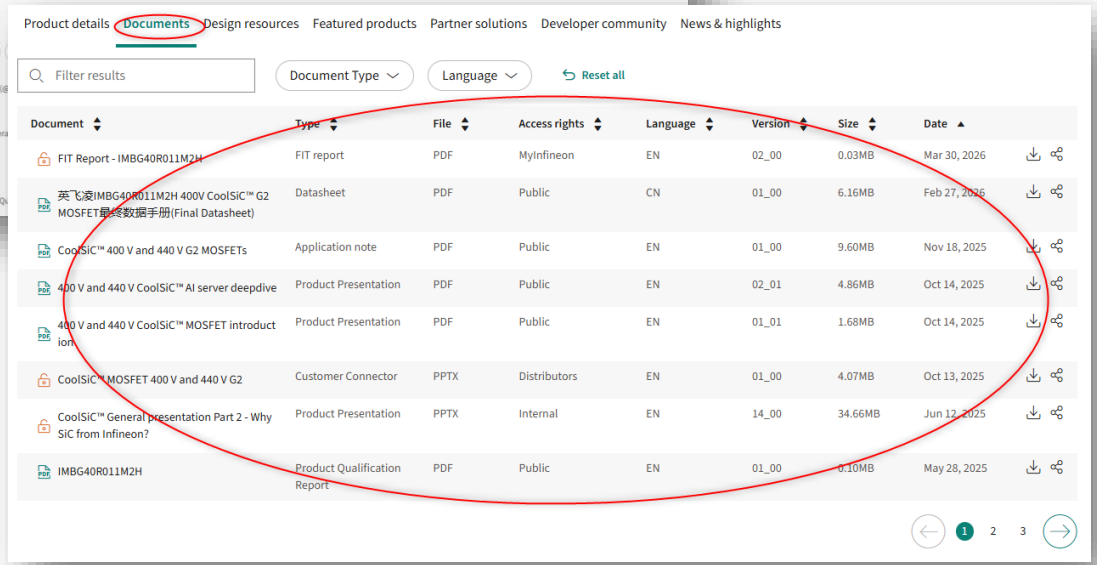

Lin
k



Copyright © Infineon Technologies AG 2026. All rights reserved.

Gate Driver ICs for 400-650 V CoolSiC™

	Product	N. channel	Package	Input-to-output isolation		UVLO typ ON / OFF	VDD range	Output peak source / sink current[1]	CMTI (min.)	Propagation delay (typ.)	Propagation delay accuracy
				Type	Rating						
	1EDN9550B	1-ch	SOT-23 6-pin	Non-isolated (1EDN-TDI)	CMR: ≤ ± 200 V_{DC} ≤ ± 400 V_{AC}	14.9 V / 14.4 V	20 V (22 V max abs)	5 A / -9 A	n.a.	45 ns	-7 ns / +10 ns
	1EDN6550B					12.2 V / 11.5 V					
	1EDB9275F	1-ch	DSO-8 150mil	Isolated (Functional / single protection)	V_{ISO} = 3 kV_{rms} (UL 1577)	14.9 V / 14.4 V	20 V (22 V max abs)	5 A / -9A	300 V/ns	45 ns	-4 ns / +4 ns
	1EDB6275F					12.2 V / 11.5 V					
	2EDB9259Y	2-ch	DSO-16 150mil	Isolated (Functional)	V_{ISO} = 3 kV_{DC} (UL 1577)	14.9 V/ 14.4 V	20 V (22 V max abs)	5 A / -9 A	150 V/ns	38 ns	-5 ns / +9 ns
	2EDR9259X	2-ch	DSO-16 300mil	Isolated (Reinforced)	V_{IOTM} = 8 kV_{pk} (VDE 0884-10) V_{ISO} = 5.7 kV_{rms} (UL 1577)	14.9 V/ 14.4 V	20 V (22 V max abs)	5 A / -9 A	150 V/ns	38 ns	-9 ns / +9 ns
	2EDR6259X					12.2 V/ 11.5 V					
	2EDR9258X					14.9 V/ 14.4 V					
	2EDR6258X					12.2 V/ 11.5 V					
	1ED3124MU12F	1-ch	DSO-8 150mil	Isolated (Functional / single protection)	V_{ISO} = 3 kV_{rms} (UL 1577)	12.5 V / 10.5 V	35 V (40 V max abs)	13.5 A / -14 A	200 V/ns	90 ns	± 10 ns
	1ED3125MU12F	1-ch, Miller Clamp				12.5 V / 10.5 V		10 A / -9 A			

More information: https://www.infineon.com/products/power/gate-driver-ics

Copyright © Infineon Technologies AG 2026. All rights reserved.


Infineon