PG-TO252-5-11

Overview

General Information

Package Material	PG
Package Family	TO252
Leads/Balls	5
Dash Version	11

Outline

Dimensions

Body Length (mm)	6.22
Body Width (mm)	6.50
Lead/Ball Pitch (mm)	1.14

Exposed Pad

Heatslug	DOWN
Exposed Paddle	NONE

Outline

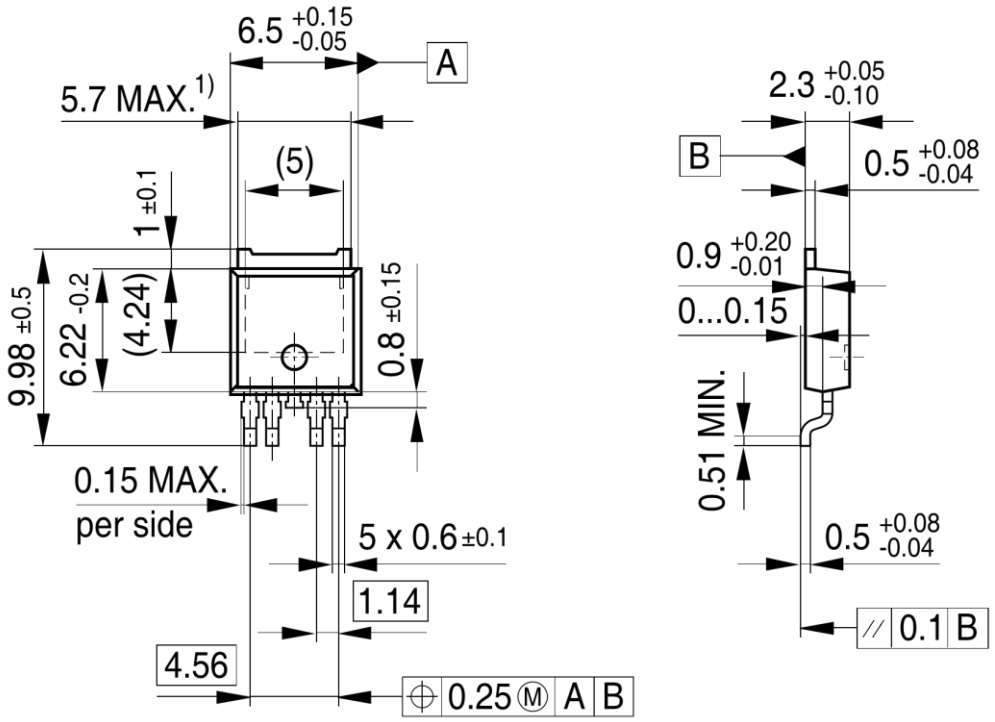

1) Includes mold flashes on each side.
All metal surfaces tin plated, except area of cut.

Footprint Dimensions

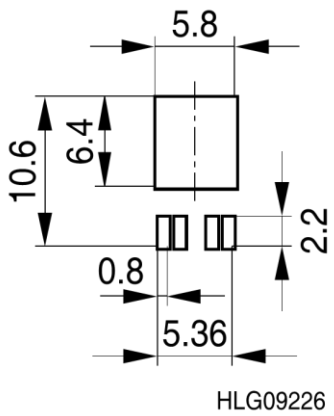

Packing

Tape & Reel

Pieces / Reel	2.500
Reels / Box	
Reel Diameter (mm)	330

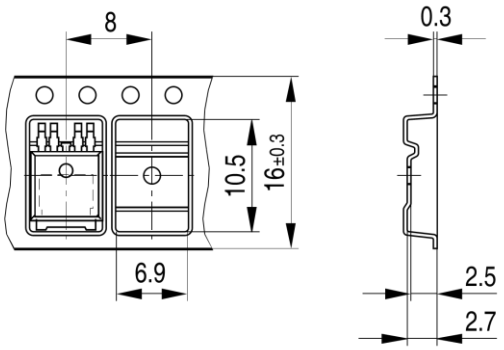

Edition 2016-04-11

Published by

Infineon Technologies AG

81726 München, Germany

© 2016 Infineon Technologies AG. All Rights Reserved.

Do you have a question about this document?

Email: erratum@infineon.com

Document reference

ifx

IMPORTANT NOTICE

The information given in this document shall in no event be regarded as a guarantee of conditions or characteristics (“Beschaffenheitsgarantie”) .

With respect to any examples, hints or any typical values stated herein and/or any information regarding the application of the product, Infineon Technologies hereby disclaims any and all warranties and liabilities of any kind, including without limitation warranties of non-infringement of intellectual property rights of any third party.

In addition, any information given in this document is subject to customer’s compliance with its obligations stated in this document and any applicable legal requirements, norms and standards concerning customer’s products and any use of the product of Infineon Technologies in customer’s applications.

The data contained in this document is exclusively intended for technically trained staff. It is the responsibility of customer’s technical departments to evaluate the suitability of the product for the intended application and the completeness of the product information given in this document with respect to such application.

For further information on the product, technology, delivery terms and conditions and prices please contact your nearest Infineon Technologies office (**www.infineon.com**).

WARNINGS

Due to technical requirements products may contain dangerous substances. For information on the types in question please contact your nearest Infineon Technologies office.

Except as otherwise explicitly approved by Infineon Technologies in a written document signed by authorized representatives of Infineon Technologies, Infineon Technologies’ products may not be used in any applications where a failure of the product or any consequences of the use thereof can reasonably be expected to result in personal injury.