Generic power evaluation board design for 12 V application - SSO8 and TLE9879QXA40

OptiMOS-6™ 40 V SSO8 MOSFET, MOTIX™ MCU TLE9879QXA40

Design Overview

This documentation describes the Generic Power evaluation board for 12V fit for the implementation of an automotive inverter application for controlling fans or pumps driven by BLDC motors. The system is controlled by a system- on-chip MOTIX™ MCU with integrated MOSFET drivers in combination with OptiMOS™-6 leadless MOSFETs.

The design is capable to drive loads up to 400W supplied by a battery voltage of 12 V.

This design guide contains a description of the design, schematics and measurement reports.

EMC is tested according to the CISPR25 standard. Thermal performance information is given and discussed.

Highlighted Components

- TLE9879QXA40
- IAUC120N04S6N006
- IAUC120N04S6N010

Target Application

- Automotive Fan and Pump
- Radiator fan, Water pump
- 400 W BLDC Motor for 12 V application

Highlighted Design Aspects



400 W functional | EMC optimized | Thermally optimized

Generic Power Board: Top View

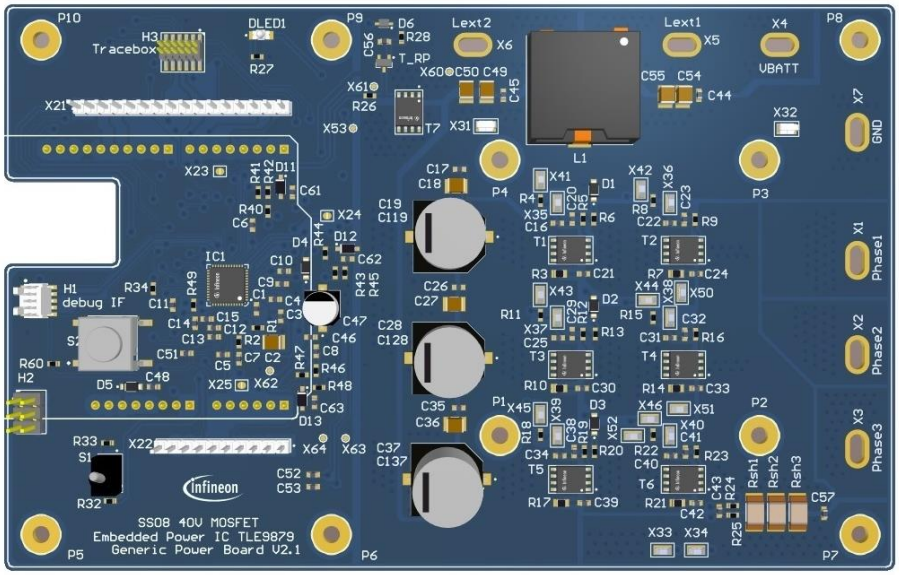

Generic Power Board: Overview

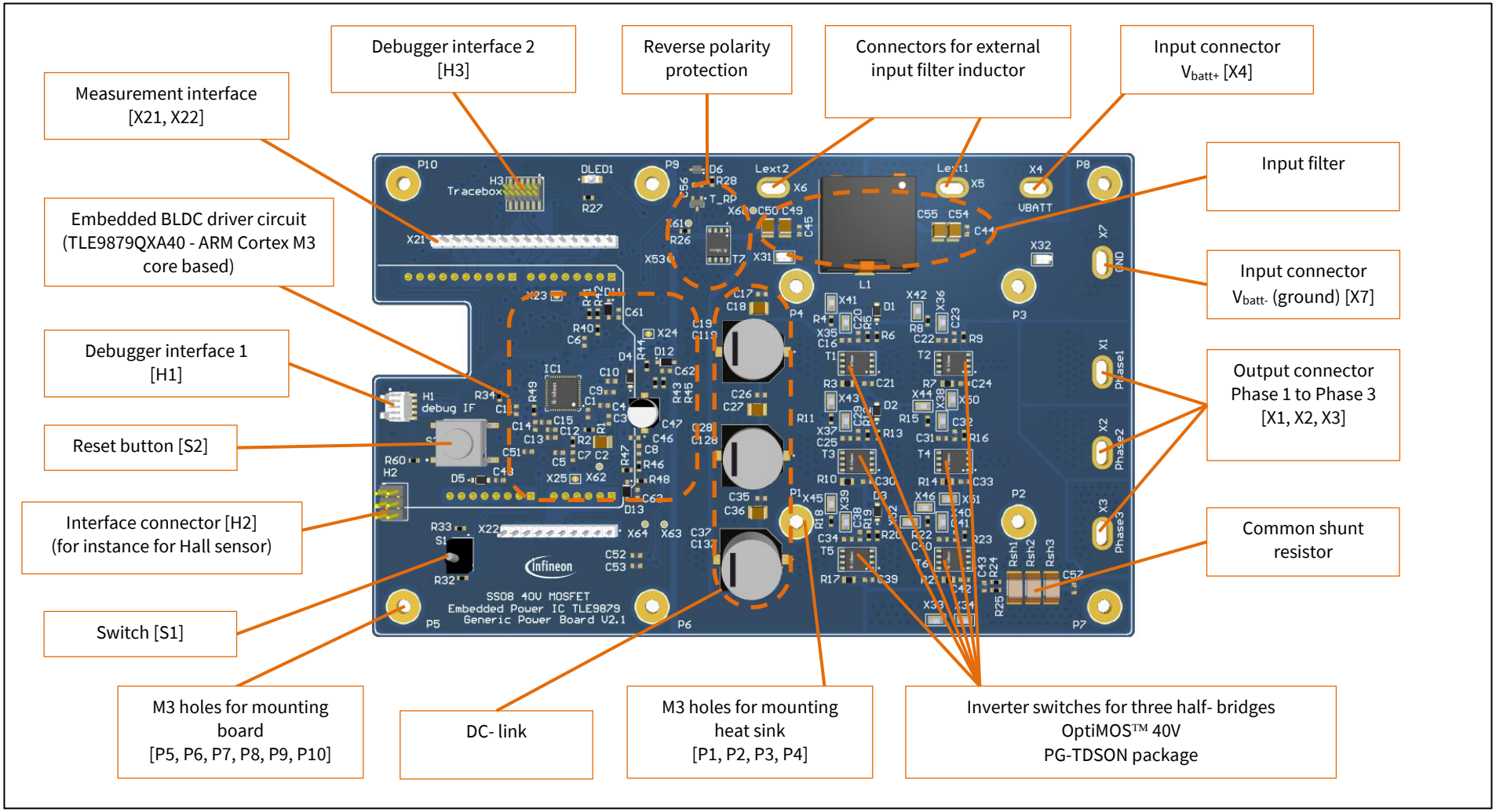

Table of contents

Table of contents **3**
Important Notice **4**
1 System Description **5**
1.1 Design Specifications 5
1.2 Overview 7
1.3 Highlighted Products 8
1.3.1 OptiMOS™-6 40 V SSO8 (TDSON-8) MOSFET 8
1.3.2 3-Phase Bridge Driver IC with Integrated Arm® Cortex®-M3 9
2 Getting Started **10**
2.1 Toolchain Installation 10
2.1.1 Configuration 10
3 System Design **11**
3.1 Electrical Design and Components 12
3.1.1 Input Filter 12
3.1.2 Reverse Polarity Protection 13
3.1.3 DC-link Electrolytic Capacitor 14
3.1.4 Shunt Resistor 14
3.1.5 Snubber 15
3.1.6 Gate Driver 15
3.1.7 Gate driver circuit 16
3.1.8 Heatsink 17
3.2 Switching Performance 19
3.3 EMC performance 23
3.3.1 Measurement configuration 23
3.3.2 Measurement results 25
3.4 Thermal performance 27
4 Project Collaterals **33**
4.1 Schematics 33
4.2 Bill of Material 38
4.3 Layout 41
4.3.1 PCB Stack 41
4.3.2 Layout Printing 42
5 Abbreviations and definitions **44**
6 Reference documents **46**
Revision history **47**

Important Notice

The Evaluation Boards and Reference Boards and the information in this document are solely intended to support designers of applications to evaluate the use of products of Infineon Technologies in the intended application.

Environmental conditions have been considered in the design of the Evaluation Boards and Reference Boards provided by Infineon Technologies. The design of the Evaluation Boards and Reference Boards is **tested by** Infineon Technologies only as described in this document. The design is not qualified in terms of safety requirements, manufacturing and operation over the entire operating temperature range or lifetime.

The Evaluation Boards and Reference Boards provided by Infineon Technologies are **subject to functional testing only under typical load conditions**. Evaluation Boards and Reference Boards are not subject to the same procedures as regular products regarding returned material analysis (RMA), process change notification (PCN) and product discontinuation (PD).

Evaluation Boards and Reference Boards are not commercialized products and are **solely intended to be used for evaluation and testing purposes**. They shall in particular not be used for reliability testing or production. Hence, the Evaluation Boards and Reference Boards may not comply with CE or similar standards (including but not limited to the EMC Directive 2004/EC/108 and the EMC Act) and may not fulfill other requirements of the country in which they are operated by the customer. The customer shall ensure that each Evaluation Boards and Reference Board will be handled in a way which is compliant with all relevant requirements and standards in the country in which they are operated.

The Evaluation Boards and Reference Boards and any information in this document are addressed **only to qualified and skilled technical staff, for laboratory usage,** and shall be used and managed according to the terms and conditions set forth in this document and in any other related documentation provided with the respective Evaluation Boards or Reference Board.

It is the **responsibility of customer's technical departments to evaluate the suitability** of the Evaluation Boards and Reference Boards for the intended application and the completeness and correctness of the information provided in this document with respect to such application.

The customer accepts that the Evaluation Boards and Reference Boards are not intended to be used for life-endangering applications such as medical, nuclear, military, life-critical or other applications, where failure of the Evaluation Boards and Reference Boards or any results from the use thereof can reasonably be expected to result in personal injury.

The Evaluation Boards and Reference Boards and any information in this document is provided "as is" and Infineon Technologies disclaims any and all warranties, express or implied, including but not limited to warranties of non-infringement of third-party rights and implied warranties of fitness for any purpose, or for merchantability.
Infineon Technologies shall not be responsible for any damages resulting from the use of the Evaluation Boards and Reference Boards and/or from any information provided in this document. The customer is obliged to defend, indemnify and hold harmless Infineon Technologies from and against any claims or damages arising out of or resulting from any use thereof.

Infineon Technologies reserves the right to change this document and/or any information provided herein at any time without further notice.

1 System Description

The inverter design describes a solution for an engine cooling fan with a power capability up to 400W output power. This solution can be used for similar applications with smaller or equal output power. The circuit contains an integrated 3-phase motor control solution. The SoC microcontroller is a member of the MOTIX™ MCU family. It combines an Arm® Cortex®-M3 microcontroller with application specific modules like an integrated 3-phase MOSFET driver, power supply and LIN-transceiver. In combination with the OptiMOS™-6 40V MOSFETs in PG-TDSON-8 package (SSO8) the board system is optimized for a minimum of PCB size for this power class. The focus of the demonstrator design is to use standard PCB materials and processes.

1.1 Design Specifications

The design specifications are related to the used components and design considerations. They shouldn't differ from the product datasheet values. In case of misalignment, the datasheet values of the products are valid.

Table 1 Design Specifications

Parameter	Symbol	Values			Unit	Comment
		Min.	Typ.	Max.		
System Parameters						
Input voltage	V_{IN}	-0.3	12	40	V	P_1.1.1 (TLE9879QXA40)
Functional input voltage	V_{IN}	7	12	18	V	Specified for Design
Output current peak	I_{OUT}	-	-	44	A	Peak current (<10 s), air cooling attached (>1.3 m/s)
Output current continuous	I_{OUT}	-	20	35	A	Specified for Design
Hall Sensor Inputs	V_{HALL}	-0.3	5	5.5	V	Specification related to GPIO Port 0,1
LIN interface	V_{LIN}	-28	12	40	V	P_1.1.7 (TLE9879QXA40)
ADC Inputs	V_{ADC}	-0.3	5	5.5	V	Specification related to GPIO Port 2
Phase 1, 2, 3	V_{SH}	-8.0	12	48	V	P_1.1.11 (TLE9879QXA40)
Thermal						
Operating temperature	T_A	-40	25	105	°C	Specified for Design

Electromagnetic Compatibility		
Conducted emissions	Class 2	CISPR25, 150 kHz -108 MHz

Mechanical Specification	
Dimensions	168 mm x 107 mm x 15 mm (L x W x H) [1]
PCB	6-layer, top/bottom layer 2 oz, inner layers 1 oz, standard FR4, 168mm x 107 mm (L x W), thickness 1.6 mm

[1] A possibly mounted heatsink is not considered. The overall high is given by using C19, C28 and C37 in circuit DC link.

1.2 Overview

Figure 1 shows the 3D CAD view of the system. The board has seven MOSFETs equipped in a PG-TDSON-8 package (SSO8), one microcontroller with LIN and integrated 3-phase BLDC MOSFET gate driver. The board allows the configuration of the common low-side shunt-resistor of the B6- bridge by three resistors connected in parallel. All active components, including the seven MOSFETs and one driver IC, are large-area arranged on the board to distribute the heat over the whole area of the PCB. As passive components, the shunt resistors are additional heat sources. Those are collecting all return current from the three legs of the bridge. The board is designed to dissipate the heat of the shunts effectively through the thermal pads. As the power circuitry part of the PCB does not have any surface-mounted components on its bottom side, it is possible to attach a simple flat heatsink at the bottom of the board. Only controller side has through-hole connectors and a switch.

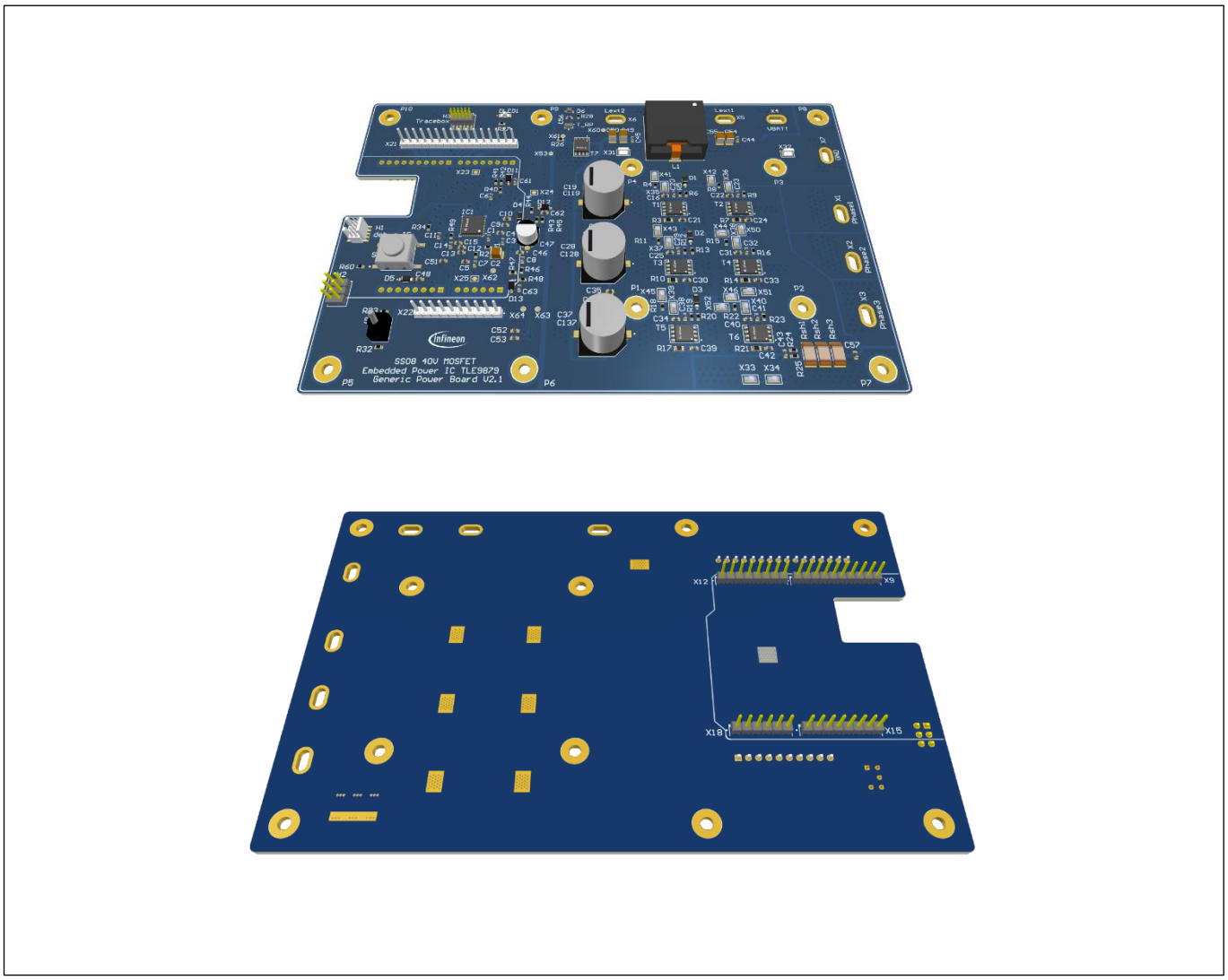

Figure 1 View to the evaluation Generic Power Board (top and bottom view)

1.3 Highlighted Products

Components highlighted with a grey background are used on the Generic Power Board.

1.3.1 OptiMOS™-6 40 V SSO8 (TDSON-8) MOSFET

The SSO8 package offers compact 33mm² footprint size with drain to source on-state resistance $R_{DS(on)}$ ranging from typically 0.54 ~4.4 [mΩ]. Its current rating is up to 3 times bigger than the S3O8 (TSDSON-8) package. In combination with Infineon's OptiMOS™-6 40 V power MOS technology, the TDSON package offers a compact yet powerful solution for automotive 3-phase motor drive up to 400W at Infineon's well known quality level for robust automotive packages.

Table 2 Automotive SSO8 MOSFET with 40 V OptiMOS™-6

Package	Silicon Technology	Product	Max $R_{DS(on)}$ [mΩ]
SSO8 (TDSON-8)	OptiMOS™-6	IAUC120N04S6L005	0.55
		IAUC120N04S6N006	0.6
		IAUC120N04S6N008	0.8
		IAUC120N04S6L008	0.8
		IAUC120N04S6N009	0.9
		IAUC120N04S6L009	0.9
		IAUC120N04S6N010	1.0
		IAUC120N04S6L012	1.2
		IAUC120N04S6N013	1.3
		IAUC100N04S6L014	1.4
		IAUC100N04S6N015	1.5
		IAUC100N04S6L020	2.0
		IAUC100N04S6N022	2.2
		IAUC100N04S6L025	2.5
		IAUC100N04S6N028	2.8
		IAUC80N04S6L032	3.2
		IAUC80N04S6N036	3.6
		IAUC60N04S6L039	3.9
		IAUC60N04S6N044	4.4

1.3.2 3-Phase Bridge Driver IC with Integrated Arm® Cortex®-M3

The TLE987x family addresses a wide range of smart 3-phase brushless DC motor control applications such as auxiliary pumps and fans. It provides a high level of integration and low system cost to optimize the target application segments. In addition, it offers scalability in terms of flash memory sizes and MCU system clock frequency supporting a wide range of motor control algorithms, either sensor-based or sensor-less. For more information about the product, please visit Infineon's webpage linked below.

- www.infineon.com/tle987x

Table 3 Product Family of 3-Phase Bridge Driver IC with Integrated Arm® Cortex®-M3

Grade	Product	Flash	RAM	Frequency	Interface	Tjmax
Grade-0	TLE9873QXW40	48 kByte	3 kByte	40 MHz	PWM + LIN	175 °C
	TLE9877QXW40	64 kByte	6 kByte	40 MHz	PWM + LIN	175 °C
	TLE9879QXW40	128 kByte	6 kByte	40 MHz	PWM + LIN	175 °C
Grade-1	TLE9871QXA20	36 kByte	3 kByte	24 MHz	PWM	150 °C
	TLE9872QXA40	256 kByte	8 kByte	40 MHz	PWM + LIN	150 °C
	TLE9872-2QXA40	256 kByte	8 kByte	40 MHz	PWM + LIN	150 °C
	TLE9877QXA20	64 kByte	6 kByte	24 MHz	PWM + LIN	150 °C
	TLE9877QXA40	64 kByte	6 kByte	40 MHz	PWM + LIN	150 °C
	TLE9879QXA20	128 kByte	6 kByte	24 MHz	PWM + LIN	150 °C
	TLE9879-2QXA40	128 kByte	6 kByte	40 MHz	PWM + LIN	150 °C
	TLE9879QXA40	128 kByte	6 kByte	40 MHz	PWM + LIN	150 °C

2 Getting Started

2.1 Toolchain Installation

In order to get the board ready and running, the software shown in Table 4 shall be installed.

The µVision software is a development tool provided by Arm® Keil®. With code length limitation, the shareware version of the µVision is still able to edit, compile and debug. The Infineon Config Wizard is a tool for configuring peripherals of the Embedded Power IC. The tool can be called from the pull-down menu of the µVision and helps users changing parameters from its user interface and then generates the software code accordingly. Infineon provides standard motor drive software codes for the Embedded Power IC. It can be downloaded from the Pack Installer within the µVision.

Table 4 Software Toolchain Installation Guide

Steps	Company	Description
STEP1 Download and Install **Keil® µVision5**	Arm® Keil®	• Arm® Keil® µVision is an integrated development environment which consists of code editor, compiler and debugger. • To learn how to use Arm® Keil® µVision 5, check out our video "**Get your motor spinning**".
STEP2 Download Config Wizard	Infineon Technologies	• Infineon provides the Config Wizard free of charge, which is designed for configuration of chip modules. Config Wizard supports easy configuring of Embedded Power IC peripherals. • Config Wizard can be installed via the Infineon Developer Center. If you don't have this Infineon toolbox yet, please go to **Infineon Developer Center Launcher** and enjoy the release management for updates.
STEP3 Download and Install **Segger J-Link Driver**	XMC™ Link based on SEGGER J-Link technology	• XMC™ Link is a debug probe for all XMC microcontrollers • The debug probe is based on Segger J-Link debug firmware, which enables use with DAVE and all major third-party compiler/IDEs known from the wide ARM® ecosystem
STEP4 Download the SDK via µVision5 Pack Installer	Infineon Technologies	• The Embedded Power Software Development Kit (SDK) is a low-level driver library which can be downloaded within Keil® µVision via the "Pack Installer"

For the toolchain installation and free motor drive software, please check below link.
www.infineon.com/embedded-power
For more information about the tool chain installation steps, watch our video.
Toolchain Installation for Embedded Power ICs / TLE98xx

2.1.1 Configuration

Open a motor drive code project in µVision5 and go to “Tools” and open “Config Wizard”. From there, setup the parameters of motor, speed/current controller and the peripherals of TLE987x. As the Embedded Power IC has a current-source gate driving scheme, the switching speed is not controlled by gate resistors, but by the “Gate Charge/Discharge” parameters in the BDRV tap of the peripherals. For more details about the configuration, please visit the Infineon website of Embedded Power ICs.

3 System Design

The evaluation board design is an automotive 3-phase motor controller for 12 V automotive applications. Target application is a cooling fan with a power of up to 400W. The functional blocks of the system are shown in Figure 2. The two main active components are:

- *3-Phase Bridge Driver IC with Integrated Arm® Cortex®-M3 (TLE9879QXA40)*
- *OptiMOS™-6 MOSFET in SSO8 package (IAUC120N04S6N010, IAUC120N04S6N006)*

OptiMOS™-6 is one of the newest generations of Infineon's low voltage MOSFET silicon technology. Combined with the compact Super-SO8 (SSO8) package, the product is a good fit for motor drive up to 400W within the engine compartment, with small form factor and excellent quality and reliability needed for automotive applications. The TLE987x is an Embedded Power IC, combining a 3-phase bridge driver with a 32-bit Arm® Cortex® M3 core and peripherals such as timer modules, ADCs, double stage charge pump, voltage regulators, external sensor supply, RAM, flash memory and LIN communication module. This Embedded Power IC is equipped with many popular functions, requiring just a few passive components nearby, with the capability to perform advanced motor control, such as senseless FOC with current-controlled gate driving.

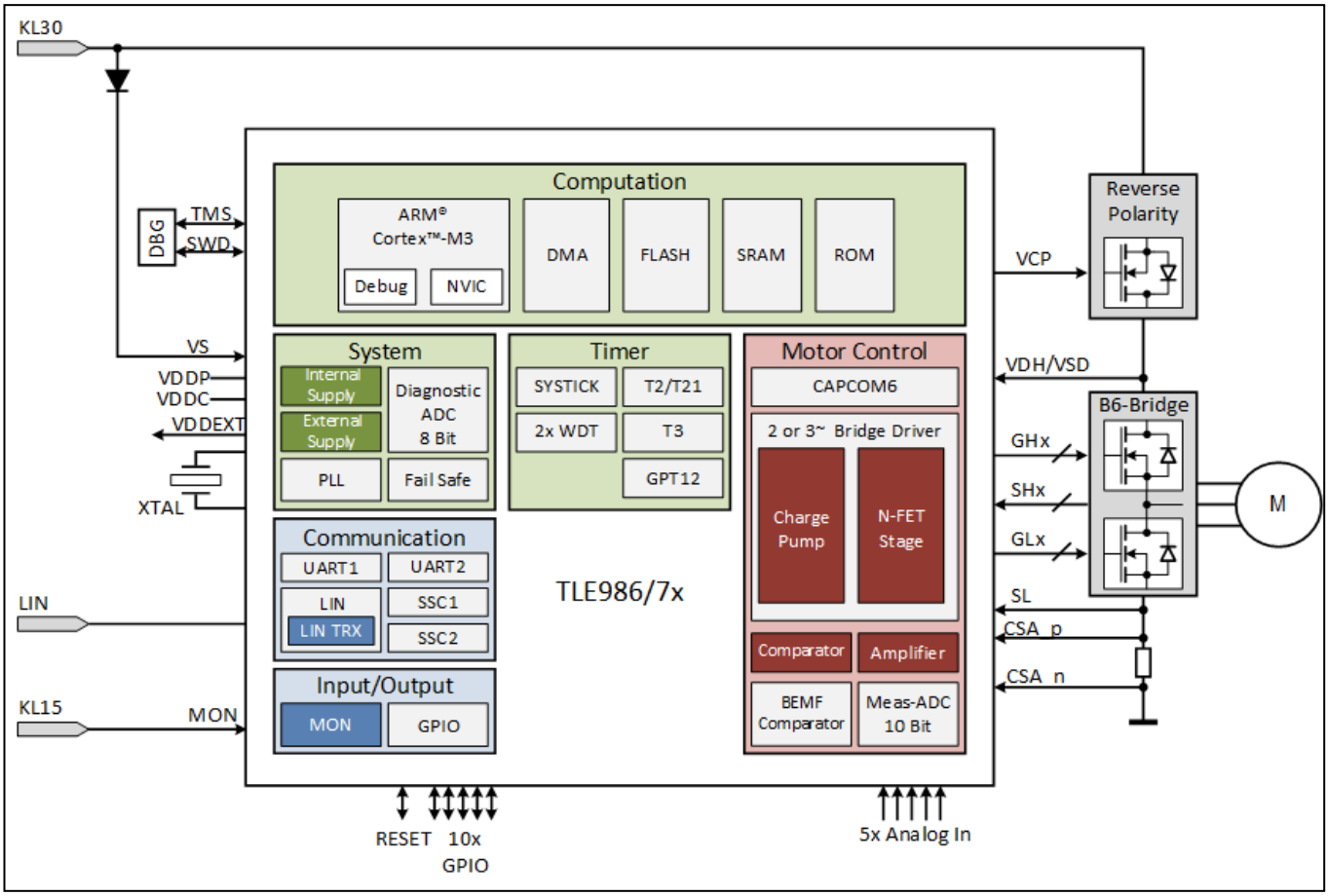

Figure 2 System block diagram

3.1 Electrical Design and Components

3.1.1 Input Filter

The low-pass input filter at the board is designed as a Pi filter. Ceramic capacitors on power supply input VBAT and filter output at net VFIL are connected to ground. The capacitors between net VBAT and VFIL are linked by an inductor in between.

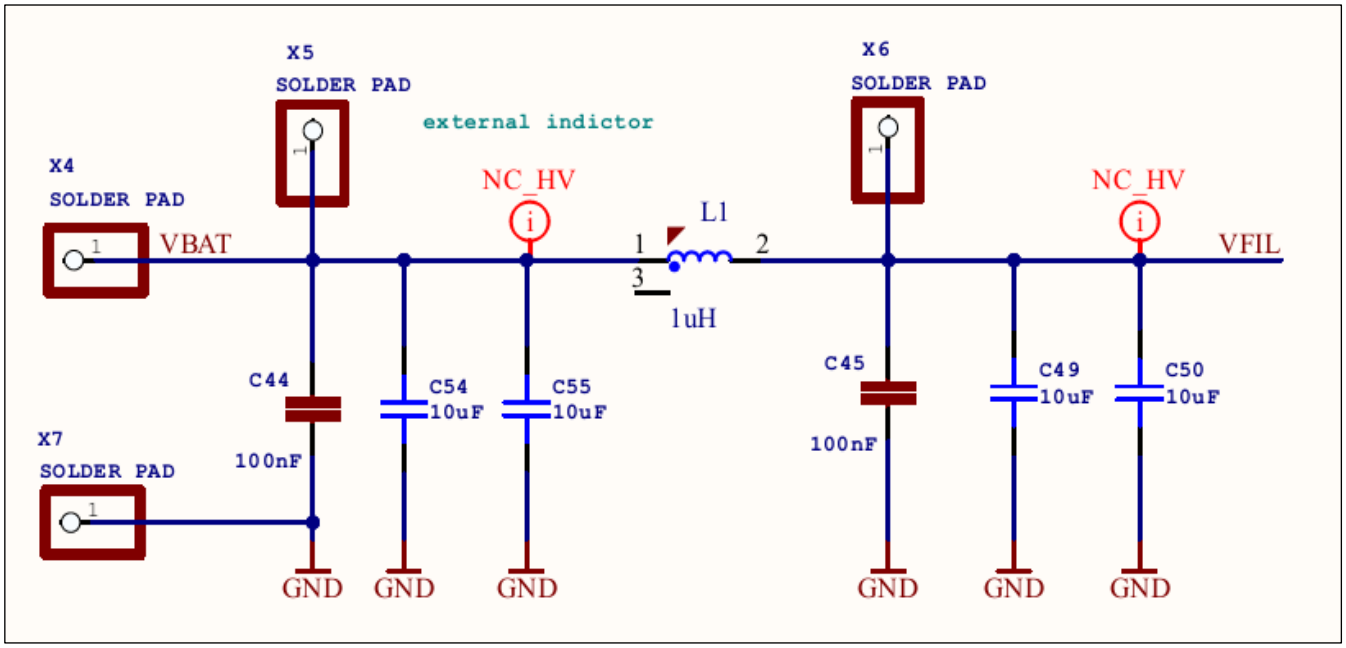

Figure 3 Power Supply: input filter

The transfer function (Bode plot) of the input filter in the frequency range from 5KHz up to 1MHz is shown in Figure 4:

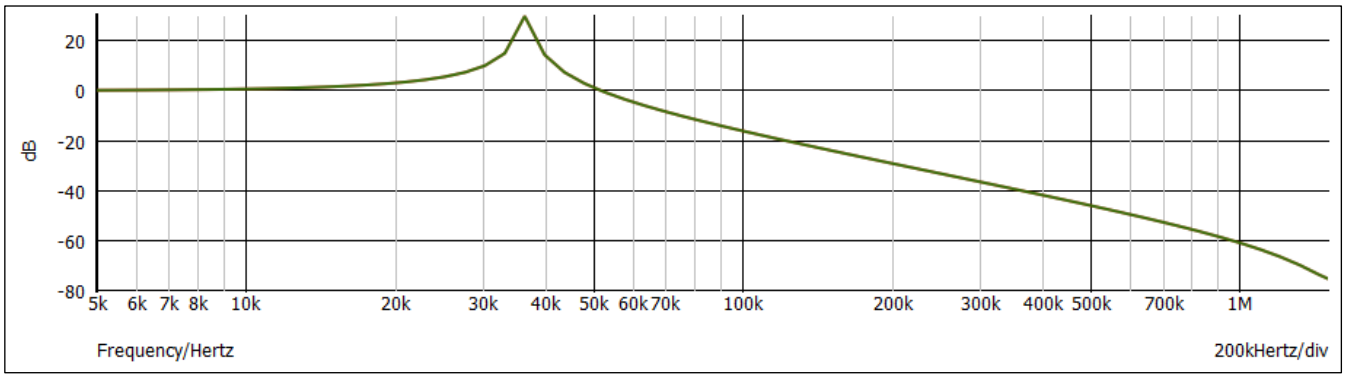

Figure 4 Transfer function of input filter

The current rating I_R of the used inductor is about 36A (ΔT 40K self-heating at room temperature, see document [8]). The high current inductor is designed as an SMT flat wire device. The inductance of the input filter inductor L1 populated to the board is 1µH. Higher values of inductance are available in the same footprint. However, the higher the inductances the lower the current rating of the component is which reduces the maximum output power the board can provide. Therefore, there is the possibility to connect a user defined inductor between the connectors X5 and X6 at the board. In this case the inductor L1 must be removed from the board.

3.1.2 Reverse Polarity Protection

The Generic Power Board is equipped with a reverse polarity protection. In normal operation after DC input voltage is applied the internal body diode of the MOSFET T7 conducts and, the biased controller IC1 turns-on the MOSFET T7 by providing the required gate-source voltage to the switch from a charge pump. Thanks to the low drain-source-on-state resistance $R_{DS(on)}$ of the MOSFET T7 large input currents needed to feed the inverter are possible by generating very low conductive power losses at reverse polarity protection.

When the DC input voltage to the power board is connected in reverse polarity, the internal body diode is in blocking direction, the MOSFET remains in off-state because the gate-source voltage of MOSFET T7 is shorted by the bipolar transistor T_RP.

The reverse polarity protection prevents failures at the inverter circuit only. Therefore, the controller IC1 is protected by a simple diode D4 against negative supply voltages on net VS.

More information about Reverse Polarity Protection for Embedded Power ICs is available in application note [14].

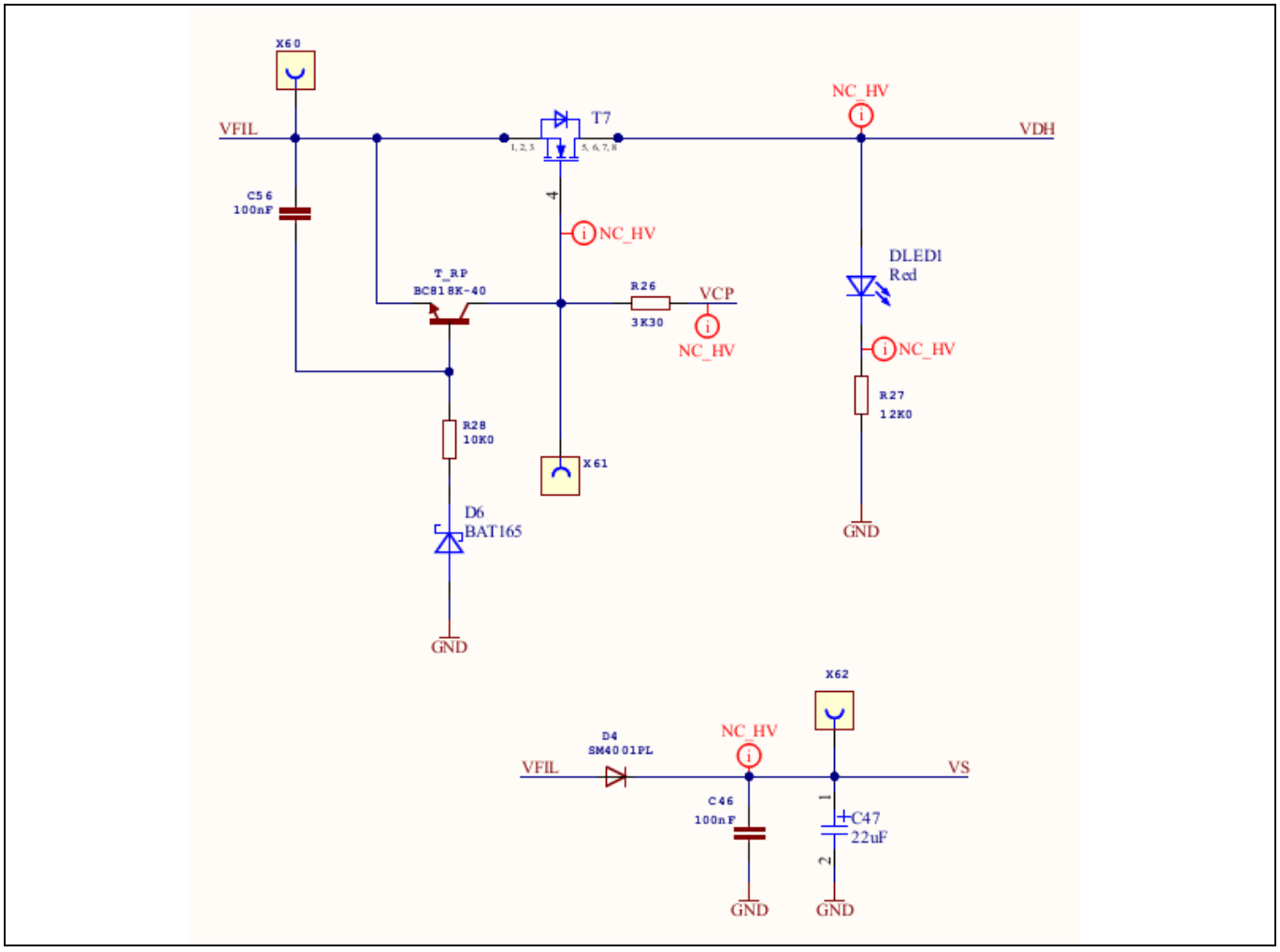

Figure 5 Reverse Polarity Protection

3.1.3 DC-link Electrolytic Capacitor

Document [6] shows a simple analytical expression for the current stress on the DC-link capacitor. For the case where the inverter controls a permanent-magnet AC machine (with near unity power factor), the worst-case current-stress estimation, used as a basis for the capacitor dimensioning, is given by $I_{C,rms} \approx {}^{1}/_{\sqrt{2}} \cdot I_{Out,rms}$.

Targeting the voltage ripple of the capacitor within 1 V, at 33 A rms output current, a total capacitance of 1200 µF is required. In this design, a 680 µF electrolytic capacitor is used for each leg of the bridge, totaling about 2000 µF.

3.1.4 Shunt Resistor

The resistance, temperature coefficient, power, derating, form-factor, stray-inductance and environmental robustness are the main features to consider when choosing a shunt resistor. As shown in the Table 5, the maximum value of the differential input voltage of the operational amplifier is given by the expression 1.5/G, where G is the selected gain of the current sense amplifier. Therefore, the value of the shunt resistor can be determined considering the targeted maximum shunt current. For example, if G = 10, the maximum differential input voltage is 150mV. If the value of the shunt resistor is 2 mΩ, the maximum shunt current is equal to I_{shunt_max} = (150 mV/2 mΩ) = 75A.

Table 5 Differential Input Voltage Range of the Operational Amplifier of TLE9879QXW40

Parameter	Symbol	Values			Unit	Note / Test Condition
		Min.	Typ.	Max.		
Differential gain (uncalibrated)	G					Gain settings GAIN<1:0>
		9.5	10	10.5		00
		19	20	21		01
		38	30	42		10
		57	40	63		11
Differential input operating voltage range OP2 - OP1	VIX	-1.5 / G	-	1.5 / G	V	G is the gain specified

The evaluation board design implements 4W, 1 mΩ overall shunt, consists of two of 2 W / 2 mΩ resistors in parallel[1]. If differential gain G is set to 20 the maximum shunt current is equal to: I_{shunt_max} = (1.5 V/20/1 mΩ) = 75 A. Considering a power derating down to 15 % of the total 4 W at 155 °C, maximum power of total shunt at 155 °C is 0.6 W. According to the resistor specification, the resistance is expected to rise by 50 ppm/°C, gives a total shunt resistance equivalent to 1.0065 mΩ at 155°C. Thus, the power dissipation at 24 A rms current is: $(24\ A)^2$ x 1.0065 mΩ = 0.58 W. The total area of the two, by default populated shunt resistors is about 43 mm^2. The population of a third shunt resistor R_{sh3} in parallel to the other shunt resistors in the same package type 2512 is possible.

[1] The first batch of the Generic Power Board is equipped with three shunt resistors of 2W / 2mΩ. All boards coming from later batches are equipped with two shunt resistors only. The user of the board must adjust the shunt configuration according to the specific application requirements and load conditions!

3.1.5 Snubber

The value of the RC snubber is based on Cornell Dubilier application guide [7], chosen by double pulse switching test. The 1Ω, 18nF RC snubber is combined with 100nF (50V) and 680µF (35V) DC-link ceramic capacitors. These capacitors work as a high frequency filter for each leg of the bridge. The power dissipation of the snubber has been calculated and verified at 18V/20KHz switching frequency. The result can be confirmed by checking the switching waveform of the voltage across Drain-Source and the Drain current. The snubber circuit is present at high side as well as low side MOSFET of each bridge leg.

3.1.6 Gate Driver

The gate driver stage of TLE987x has sophisticated function sets and protection schemes. It has an overcurrent detection and a shutdown feature, adjustable cross conduction protection, supply voltage (VSD) monitoring including adjustable over- and undervoltage shutdown, VDS comparators for short circuit detection in on- and off-state and open-load detection feature in MOSFET off-state, to name a few. Taking a look at the bridge driver parameters setup, the Config Wizard has a ‘TLE987x Peripherals’ tap, where the user can configure the setting of each function module. Under this, In the BDRV tap, bridge driver parameters such as charge pump, diagnosis and gate charge/discharge can be configured. The MOSFET switching speed is determined by the parameters under ‘Gate Charge/Discharge’. This range is broken down to 31 steps, by which the effective charge/discharge current is determined. By changing these parameters, the gate driving current capacity can be tuned in order to have desired switching speed. For more details regarding setup of the gate driver refer to Chapter 5 of ‘TLE986x_TLE987x Bridge Driver Application Note’ [3].

3.1.7 Gate driver circuit

Figure 6 shows exemplarily the driver circuit between gate driver of controller IC1 and a MOSFET of the B6- bridge. The example shows the configuration of the driver circuit at the high side MOSFET. The configuration of the high-side and low- side driver circuit is similar. However, there are differences which are specially pointed out.

Between the gate driver outputs GHx (high- side) and GLx (low- side) and the gate pin at the MOSFET there is a serial resistance RG_ext. The value of the resistor is 2Ω. The resistor is intended for gate- current measurements, corresponding tests point are available on the board. Because of the feature to configure the current limitation of driver source or sink current the resistor RG_ext does not affect the switching characteristic of the driven MOSFET. Additionally, there is a high- ohmic resistance RGS_ext connected to gate and source of the MOSFET. The resistor guaranties that the MOSFETs of the inverter get and remain in off-state when Power Board is unbiased.

There is the possibility to add external capacitances between gate and source, but also between gate and drain[1]. If external capacitors are used the charge in addition to the total gate charge of the MOSFET the driver has to provide must be considered when configuring the driver setup.

A protection circuit made by a diode Dpr and a resistor Rpr is connected between the source of driver and the source of the high side MOSFET only. The circuit protects the driver against unallowed negative transient voltages at the driver source pin. The diode Dpr clamps the voltage, and the resistor limits the current flowing through the conducting diode. Due to the low ohmic connection from ground (V_{Batt-}) through shunt resistor to the source of the low side MOSFETs a protection circuit is not needed at low side. Another difference is that the sources of all three low side drivers are shared to one common source pin (SL) to all three low side MOSFETs of the B6-bridge.

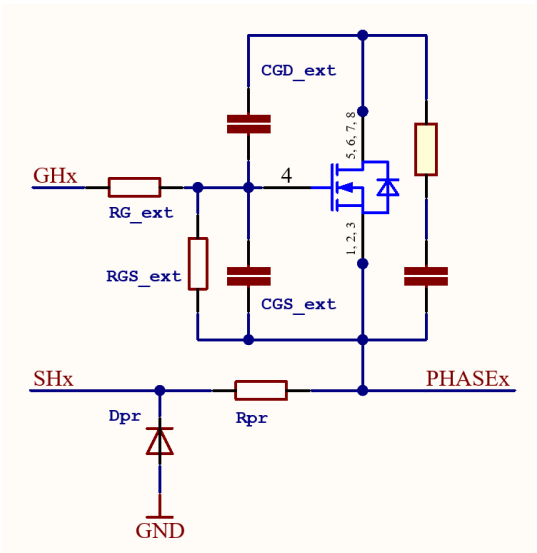

Figure 6 External Gate-drive circuit (high side MOSFET)

[1] The first batch of the Generic Power Board is equipped with an external capacitor (1.8nF) between gate and source and a capacitor (150pF) between gate and drain of the MOSFET. These capacitors are not populated at boards coming from later batches!

3.1.8 Heatsink

To realize maximum output power from the inverter to the motor load connected to the phase outputs in case of high ambient temperature there is the possibility to connect a heatsink to the board.

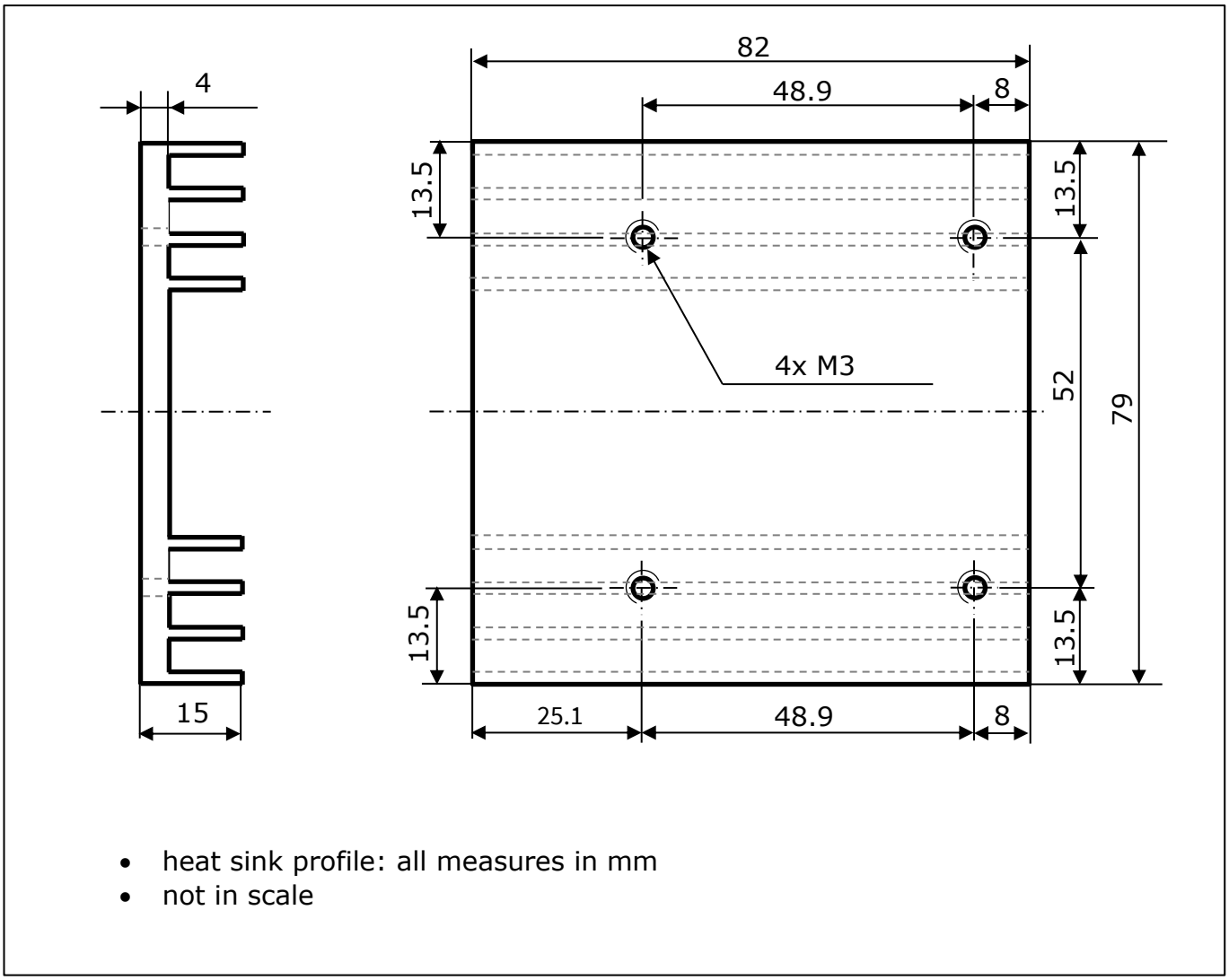

Figure 7 Drawing Heatsink

A drawing of a heatsink matching to the board dimensions is shown in Figure 7. A suitable heatsink-profile (WA204 from Seifert) can be ordered here [9]. The heatsink can be mounted to the bottom side of the board. The holes P1 to P4 are placed to the center of the PCB for mounting the heatsink using M3 screws.

An isolating thermal interface material TIM between the heat sink and the bottom side of the board is required because the solder-stop-free, gilded areas on bottom layer underneath the exposed pads of the inverter MOSFETs and the reverse polarity MOSFET lead different electrical voltage potential and must be isolated to each other. The recommendation is to use a thermally conductive gel, for example DOWSIL TC-4060 [10]. The silicon-based gel is available containing glass beads (250µm) to ensure a minimum gap between bottom layer of board and heatsink. The minimum thickness of TIM between bottom layer side of the PCB and the PCB should be equal

or greater than 250µs to ensure the electrical isolation. Additionally, to reach best efficiency of cooling system regarding heat dissipation from MOSFET to ambient the gap shall be smaller than 700µm. The smaller the thickness of the TIM, the lower the value of thermal resistance between board and heatsink.

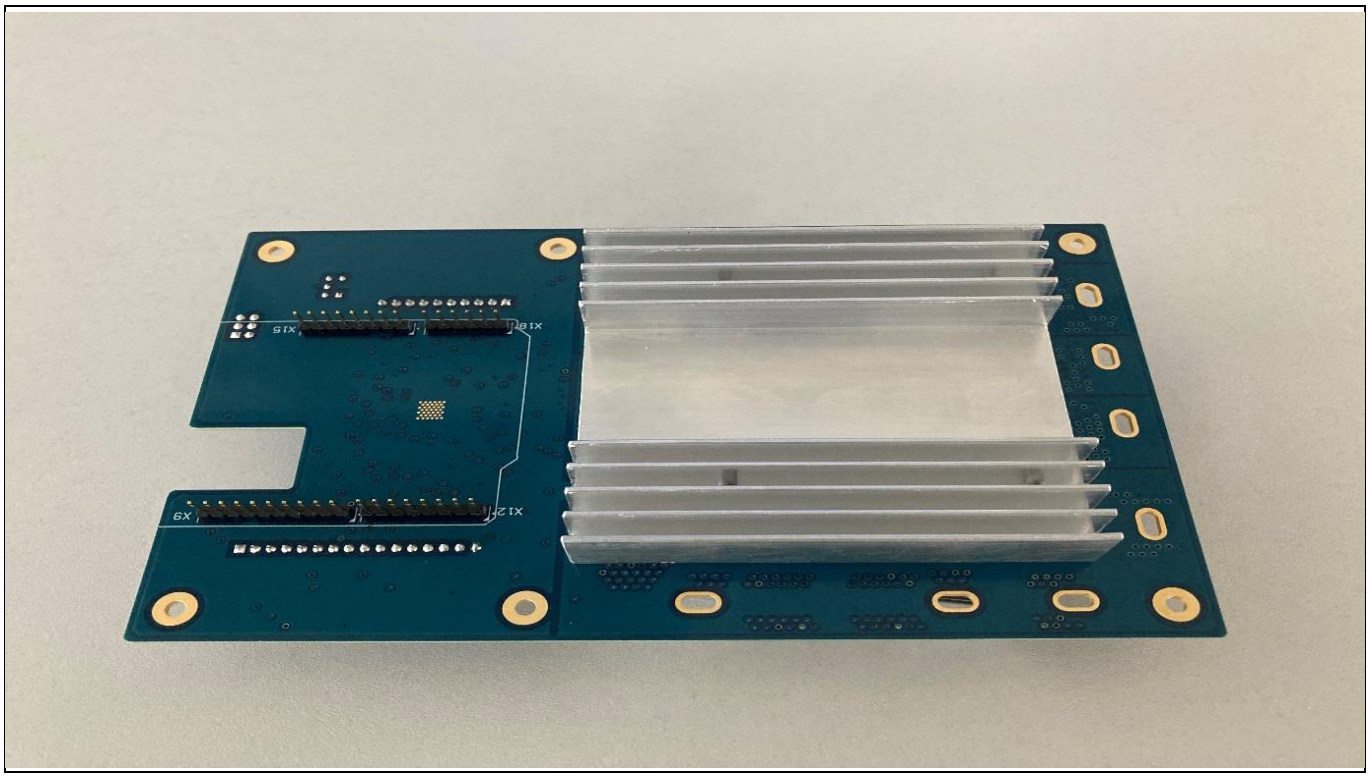

Figure 8 Heatsink mounted to the PCB

This following chapters show the performance and characteristics of the evaluation design under certain operating conditions.

3.2 Switching Performance

The bridge drivers containing in the micro controller IC1 can drive power MOSFETs directly. The output stages of the drivers operate as constant current sources or sinks respectively. The maximum gate current for charging and discharging the MOSFET gate is configurable independent. A description of the different options to configure the MOSFET's driver setup is given in [3].

The examples shown in this chapter demonstrate the influence of three different configurations regarding the gate charge/discharge current provided by the drivers during switching the corresponding MOSFETs. In the depicted examples the charge/discharge current configuration is the same for all switching phases of both sequences, turn-on and turn-off. Furthermore the driver uses the same setup for high side and low side MOSFETs in the B6- bridge.

Table 6 Boundary conditions of switching behavior

Condition	Value	comment
V_{batt}	13.5V DC	input voltage to power board
I_{DS}	30A	adjusted by duty cycle of PWM signal for controlling the MOSFETs
load	inductor	• L = 330µH • R = 250mΩ (the windings of one phase of a non-rotating synchronous motor has been used as load)

xxx_TRIM	0x3,
	0x7,
	0xB
		gate driver settings related to the internal driver charge/discharge current:
		
		set in B6-Bridge Driver Control-3 register `CTRL-3` (see [13]) in the fields:
		
		`ICHARGE_TRIM:` bit 0 to bit 4 of `CTRL-3`
		`IDISCHARGE_TRIM:` bit 8 to bit 12 of `CTRL-3`
		
		• same value used for charging and discharging the MOSFET gate
		• the gate current limitation set values vary from 30mA to 110mA (see [3])

BOM	-	C16, C22, C25, C31, C34, C40: not populated, C20, C23, C29, C32, C38, C41: not populated

The following diagrams (Figure 10, Figure 11, Figure 12 and Figure 13) show the switching behavior of high-side and low side MOSFETs using driver configurations described in Table 6. The characteristic of the Gate-Source voltage V_{GS} together with the Drain-Source voltage is shown. As expected higher gate charge/discharge currents force the MOSFETs to switch faster. The switching times for the different configurations are summarized in Table 7.

Table 7 Turn-off/turn-on time of low side/high side MOSFET

Low side MOSFET		
Turn-on time t_{ON}[1] depending on parameter `ICHARGE_TRIM` in control register `CTRL-3`:		
`ICHARGE_TRIM` = 0x3	`ICHARGE_TRIM` = 0x7	`ICHARGE_TRIM` = 0xB
502ns	287ns	216ns
Turn-off time t_{OFF}[2] depending on parameter `IDISCHARGE_TRIM` in control register `CTRL-3`:		
`IDISCHARGE_TRIM` = 0x3	`IDISCHARGE_TRIM` = 0x7	`ICHARGE_TRIM` = 0xB
983ns	489ns	345ns
High side MOSFET		
Turn-on time t_{ON} depending on parameter `ICHARGE_TRIM` in control register `CTRL-3`:		
`ICHARGE_TRIM` = 0x3	`ICHARGE_TRIM` = 0x7	`ICHARGE_TRIM` = 0xB
594ns	307ns	221ns
Turn-off time t_{OFF} depending on parameter `IDISCHARGE_TRIM` in control register `CTRL-3`:		
`IDISCHARGE_TRIM` = 0x3	`IDISCHARGE_TRIM` = 0x7	`ICHARGE_TRIM` = 0xB
1.02µs	514ns	370ns

[1] Measured from 10% V_{GS} to 10% V_{DS} voltage of the MOSFET.

[2] Measured from 90% V_{GS} to 90% V_{DS} voltage of the MOSFET.

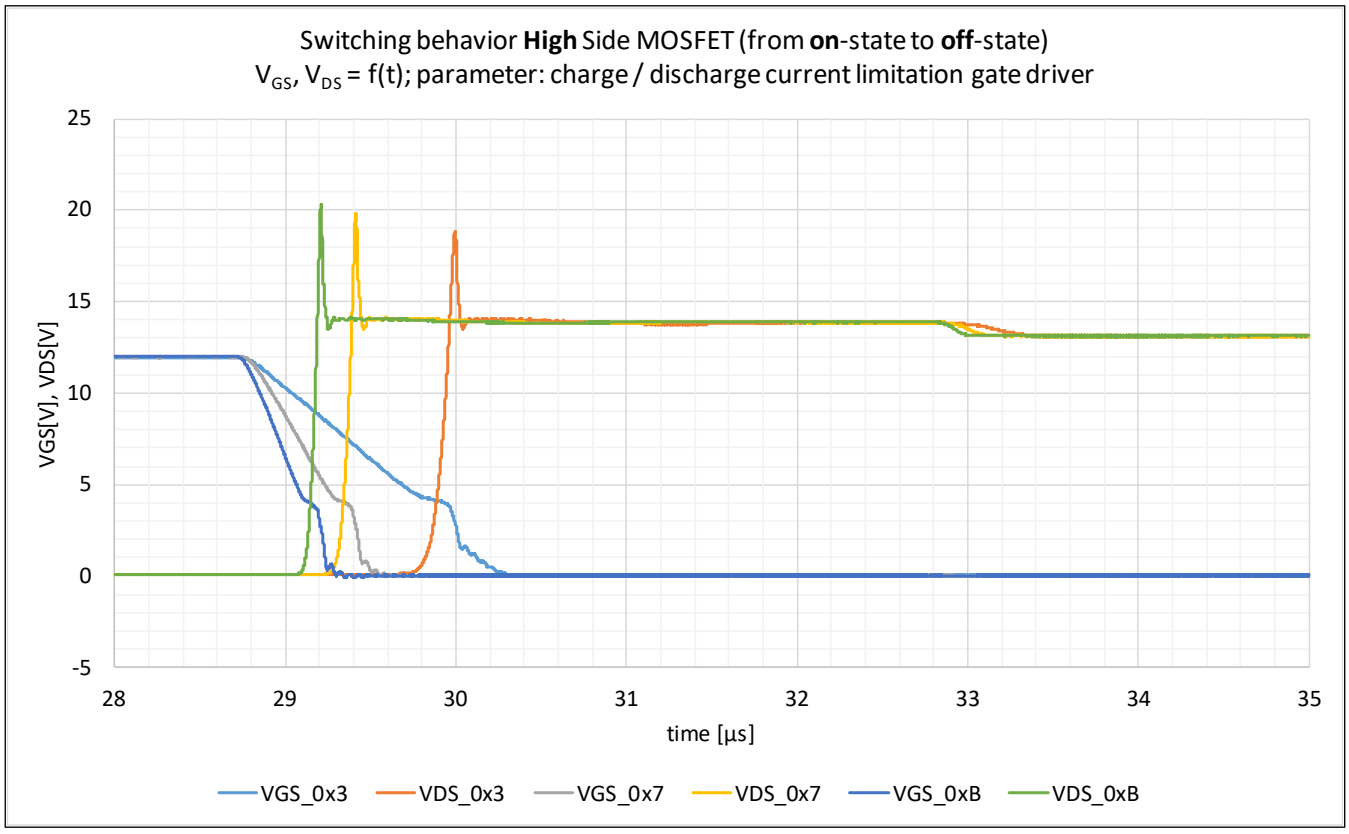

Figure 10 Switching behavior of high-side MOSFET (sequence turn-off)

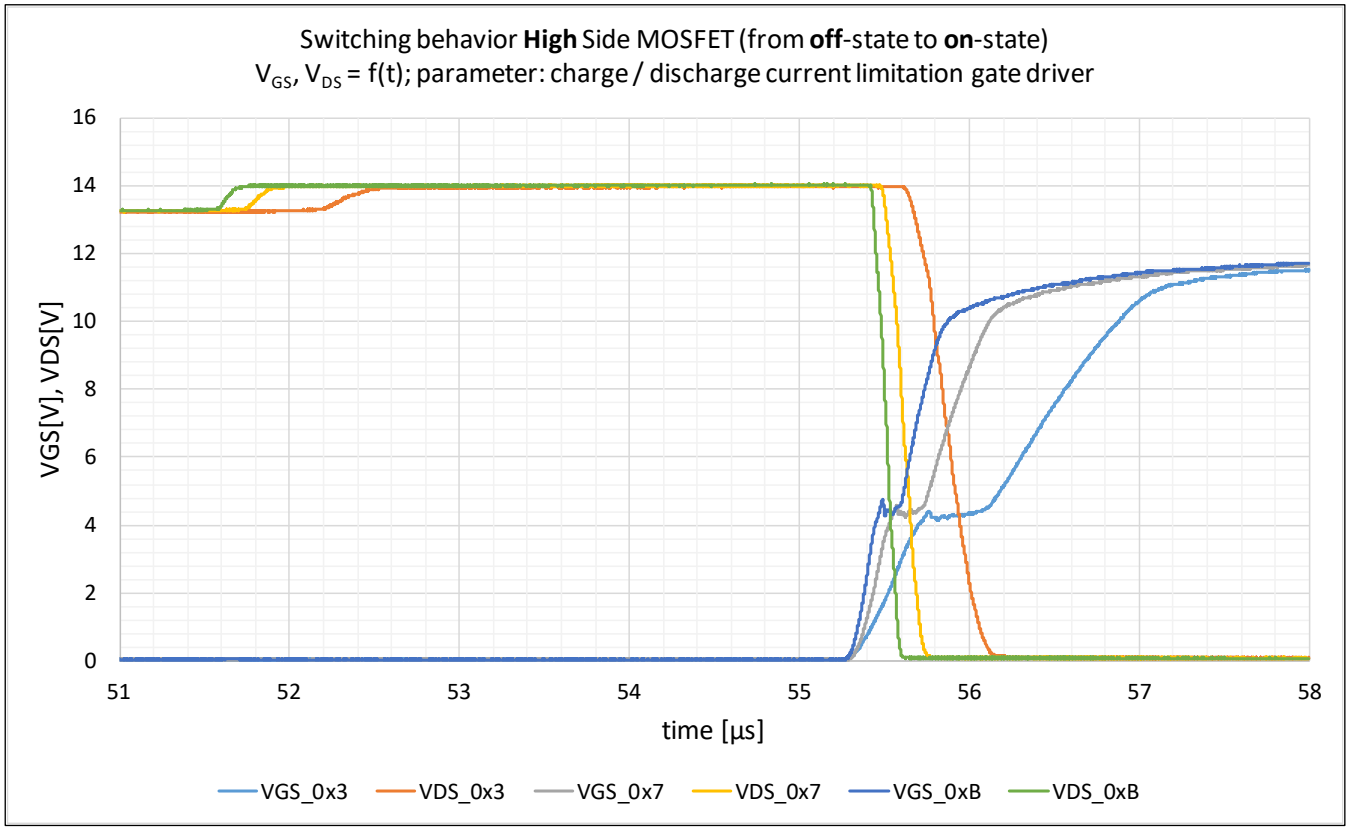

Figure 11 Switching behavior of high-side MOSFET (sequence turn-on)

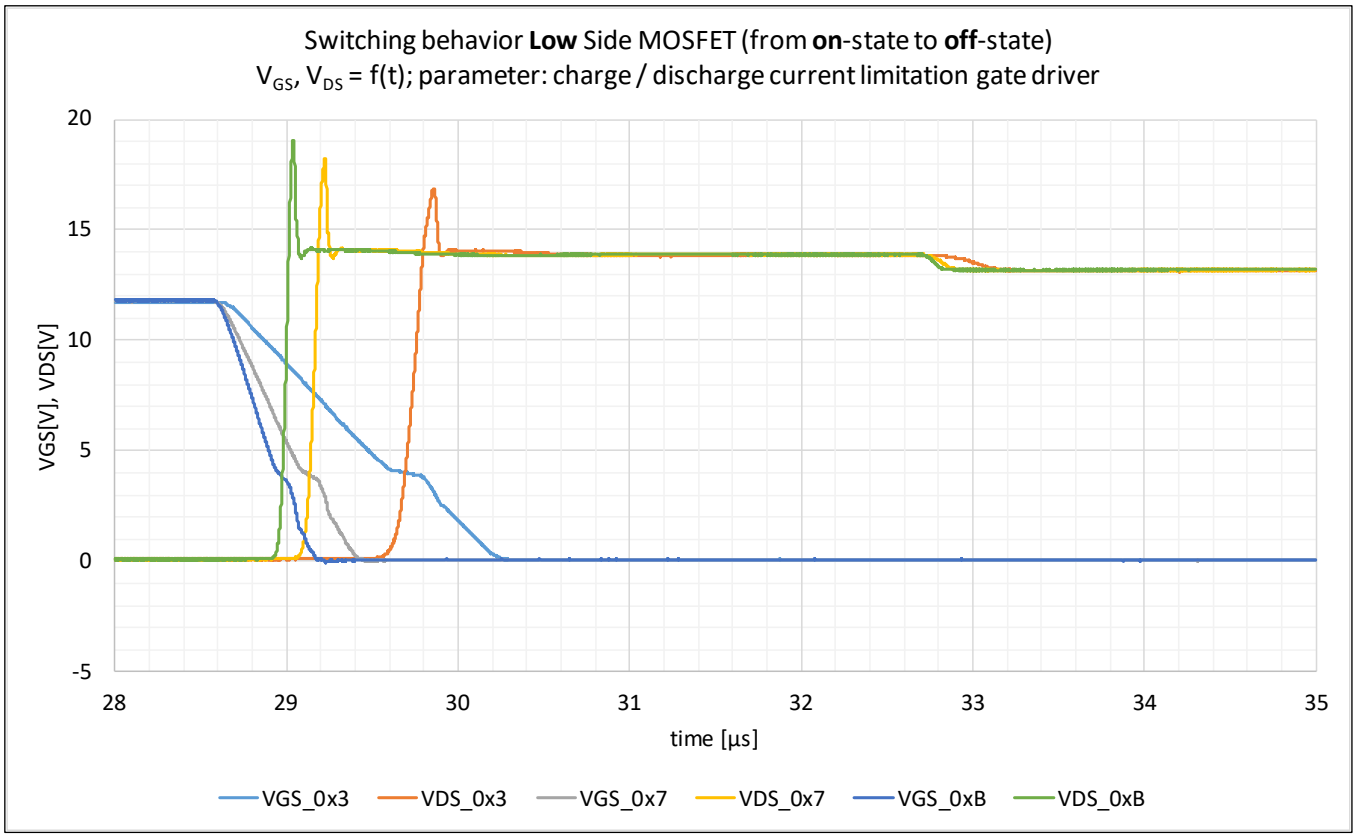

Figure 12 Switching behavior of low-side MOSFET (sequence turn-off)

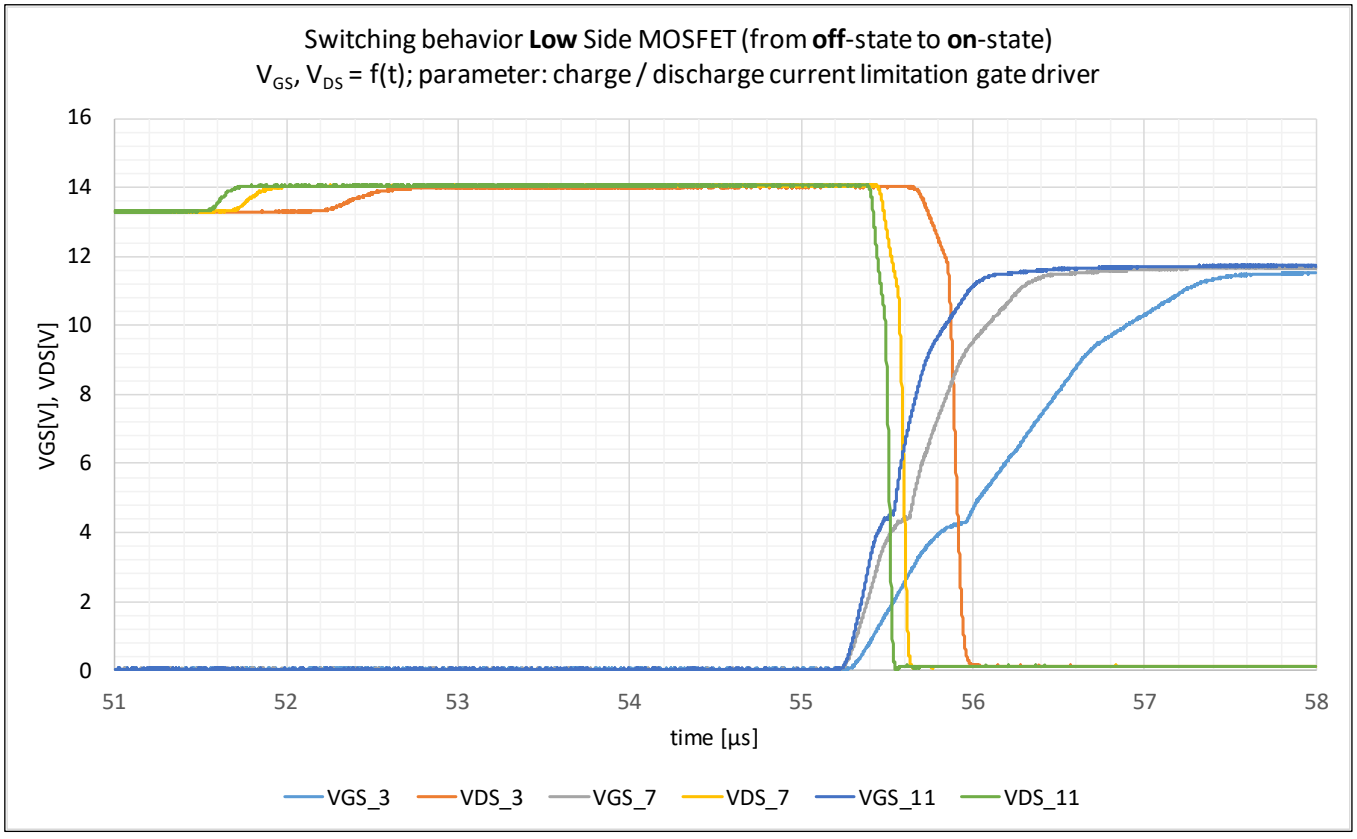

Figure 13 Switching behavior of low-side MOSFET (sequence turn-on)

3.3 EMC performance

Switched power supplies operating in automotive applications have to fullfil the requirements of the electromagnetic- compatibility EMC in order to ensure the faultless operation of all interconnected devices in an electromagnetic environment. The conductive emission of the Generic Power Board has been measured according the standard CISPR 25, common applied to automotive applications.

3.3.1 Measurement configuration

The measurement configuration is shown in the Figure 14 and Figure 15. The DUT is the Generic Power Board. Both power supply lines, V_{Batt+} and V_{Batt-}, to the DUT are lead through the LISNs each. The DUT is placed to a wooden panel board to ensure a certain distance to the metal plane on the table connected to ground potential.

As load acts a DC-Brushless Motor DB42S02 from Nanotec Electronic [11]. To adjust the electric output power provided by the inverter the shaft of the motor is connected via a mechanical coupling device to a current controlled hysteresis brake HB-50M-2DS from Mobac [12]. The breaking system is supplied by a separate current source. The motor and the hysteresis break are mounted to a fixture placed (isolated) on the ground plane of the table.

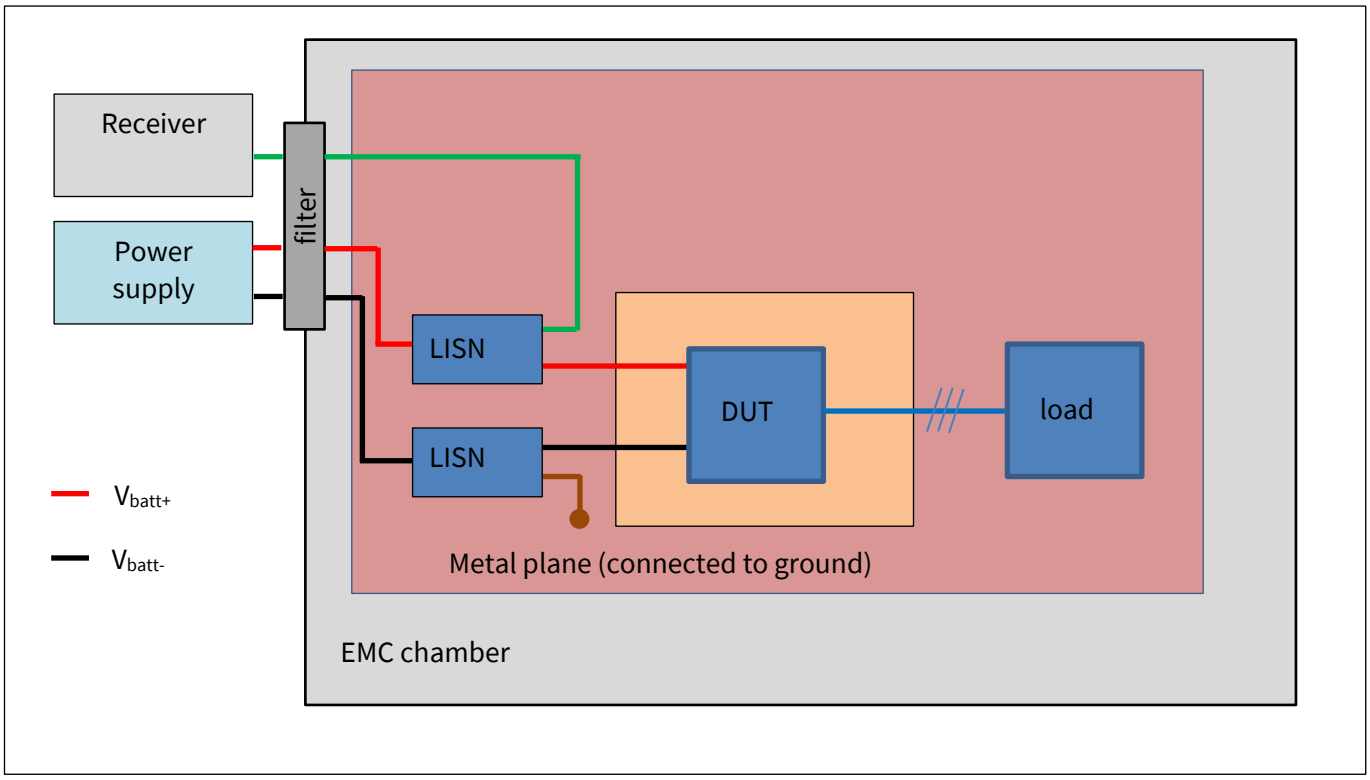

Figure 14 Measurement configuration (1)

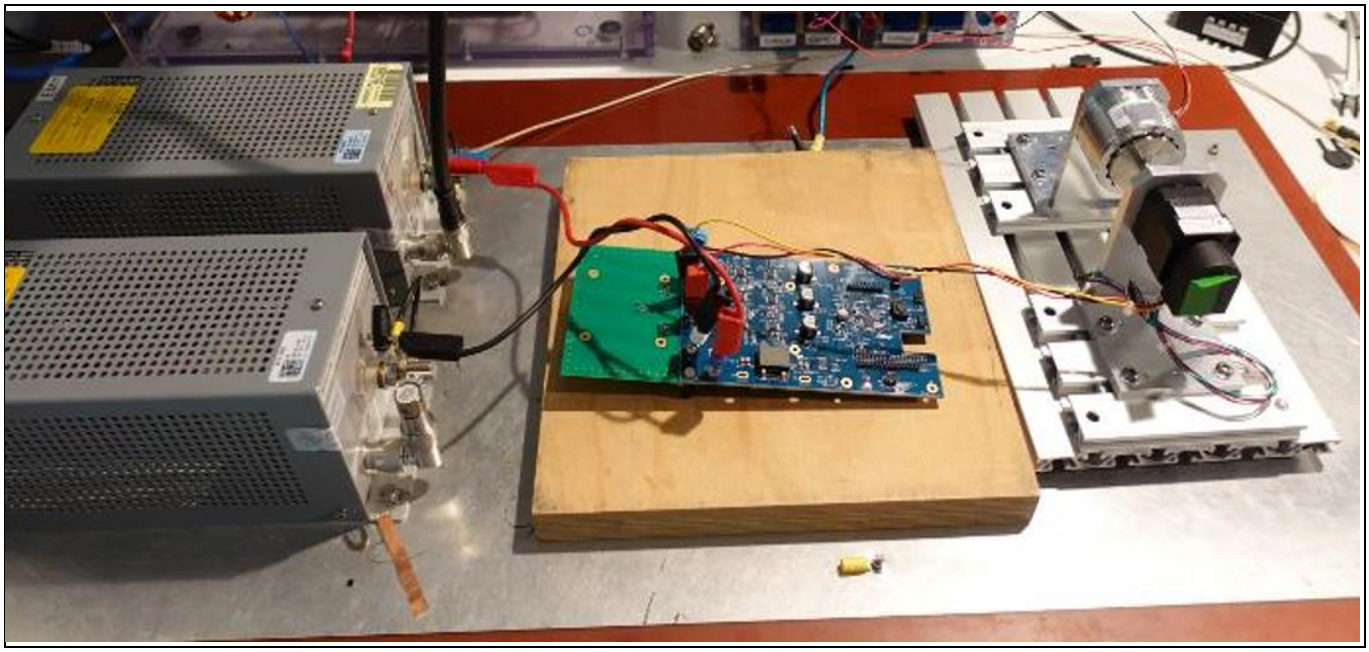

Figure 15 Measurement configuration (2)

In Table 8 the conditions are summarized which have been applied to the system to measure the conductive emission according standard CISPR 25.

Table 8 Conditions for measurement conductive emission according to CISPR25

Condition	Value	comment
V_{batt}	13.5V	input voltage to power board
P_{out_inv}	50W	electrical output power of the inverter (controlled by hysteresis break accordingly)
f_{sw}	20KHz	switching frequency to the inverter switches (pulse pattern w/o third harmonic)
T_a	25°C	ambient temperature in EMC chamber

xxx_TRIM	0x3,
	0x7,
	0xB
		Gate driver setting related to the internal driver charge/discharge current:
		
		Set in B6-Bridge Driver Control-3 register `CTRL-3` (see [13]) in field:
		
		`ICHARGE_TRIM:` bit 0 to bit 4 of `CTRL-3`
		`IDISCHARGE_TRIM:` bit 8 to bit 12 of `CTRL-3`
		
		• same value used for charging and discharging the MOSFET gate
		• the gate current limitation set- values vary from 20mA to 110mA (see [3])

BOM	-	C16, C22, C25, C31, C34, C40: not populated, C20, C23, C29, C32, C38, C41: not populated

3.3.2 Measurement results

In Figure 16 (peak values) and Figure 17 (average values) the measurement results are shown for the three different values of maximum charge and discharge gate current limitation. The measured conductive emission shows a clear trend towards lower emission levels in the frequency range from starting 2MHz up to 100MHz by lower current limits configured to the MOSFET gate drivers because the lower the gate current limitation the lower the switching speed of the corresponding MOSFET switch is. For frequencies lower than 2MHz there is no noteworthy difference visible.

From EMC point of view the possibility to modify the switching behavior of the MOSFETs in the B6- bridge by changing the configuration registers in microcontroller to adjust the gate driver current limitation allows to lower the conductive emission of the inverter application without any change of hardware.

When the current limitation is set to a value of 0x7 or lower (fields `ICHARGE_TRIM, IDISCHARGE_TRIM` in `CTRL-3`, corresponds to a set value for current limitation of about 60mA) the EMC standard in terms of conductive emission according CISPR25 class II can be fulfilled. Faster switching behavior of MOSFETs leads to a lower level of CISPR25 class I only.

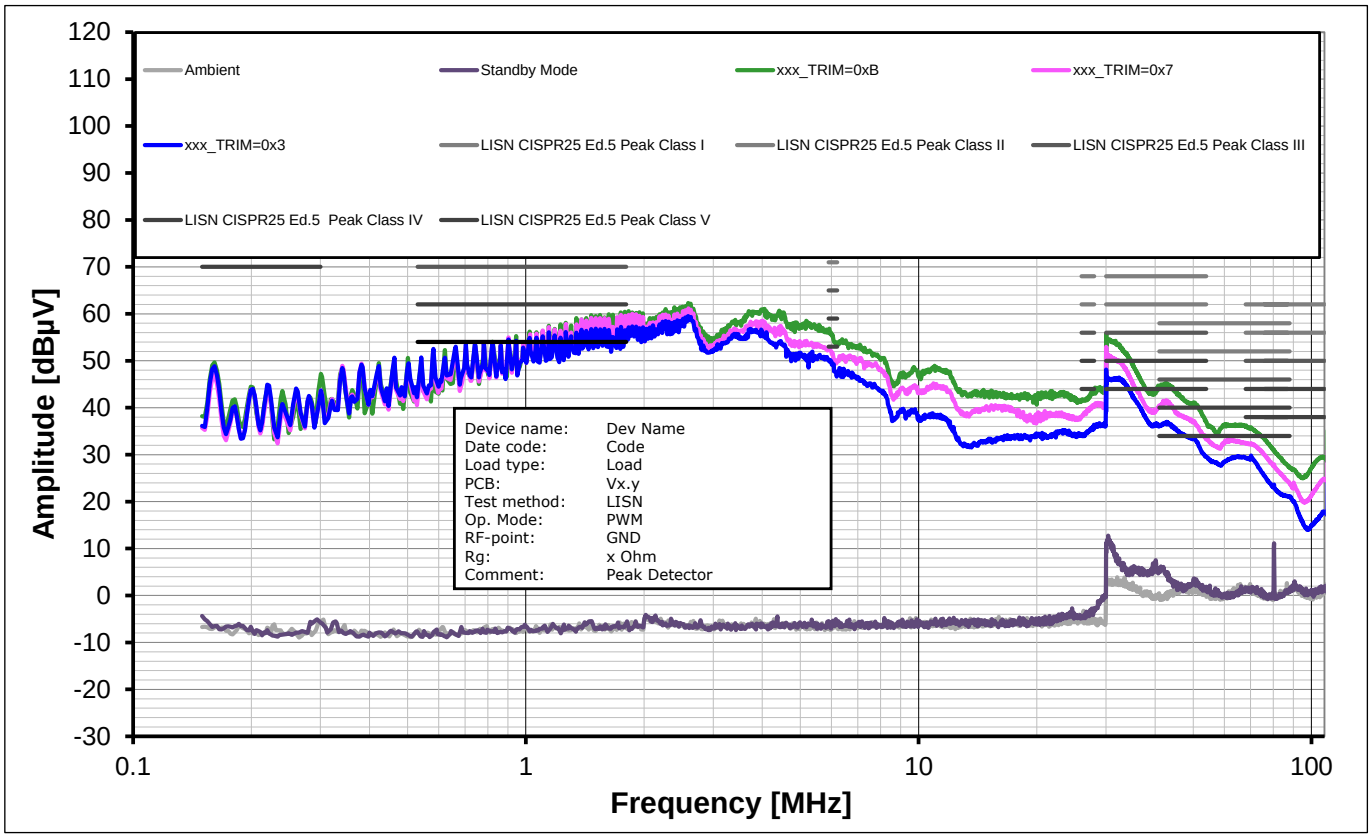

Figure 16 Conducted Emission Measurement: Motor On-State, VBAT-Line (Peak values)

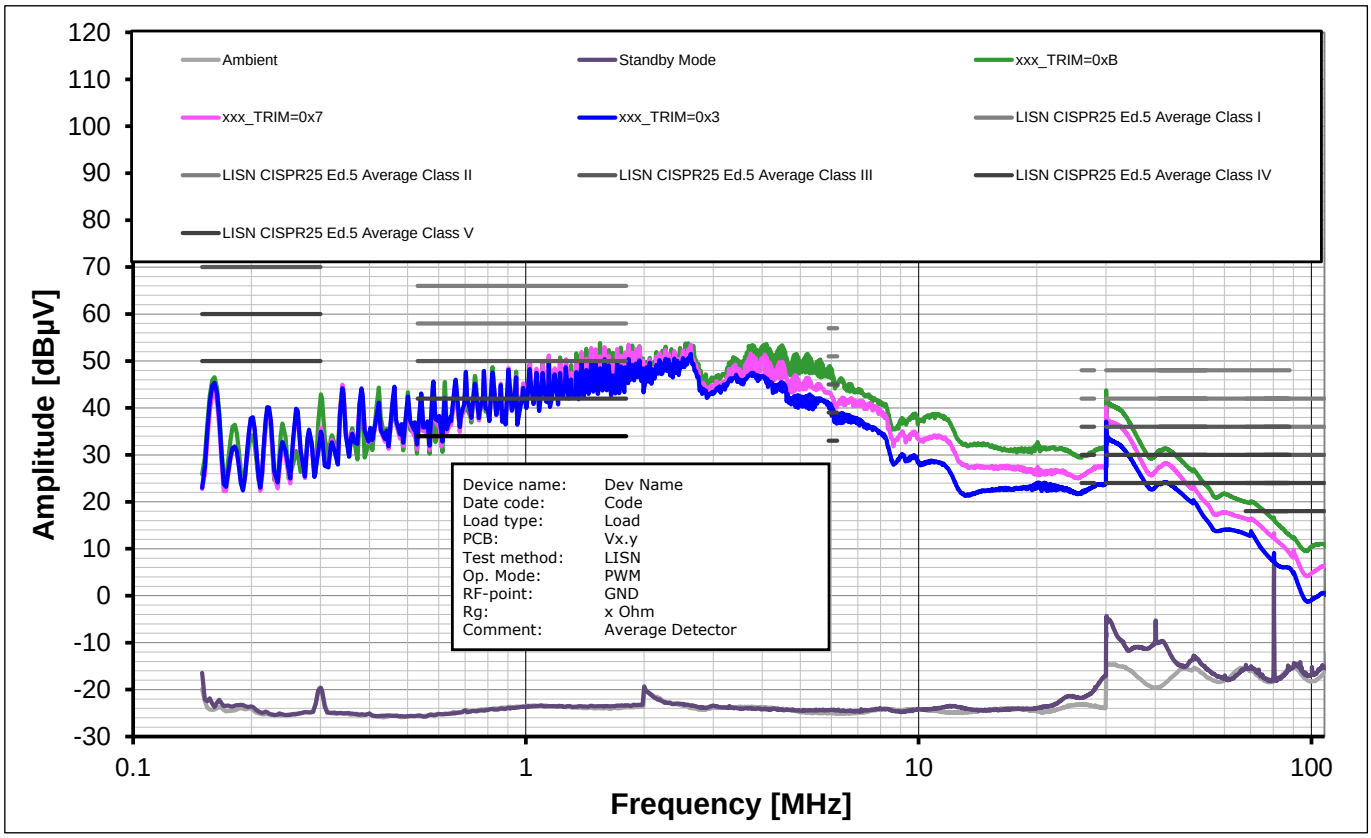

Figure 17 Conducted Emission Measurement: Motor On-State, VBAT-Line (Average values)

3.4 Thermal performance

To demonstrate the thermal performance of the Generic Power Board a thermal simulation has been performed. The simulation covers different conditions. The PCB is in free air as shown in Figure 18. The bottom side of the PCB board is pointing down. Depending on the simulation configuration on bottom side of the PCB a heat sink (as described in chapter 3.1.8 Heat Sink) is mounted to the PCB. In case of the heat sink is present a thermal interface material TIM connects the PCB with the heat sink. The thickness of the TIM between PCB and heat sink is set to 250µm, as gap filler the properties of thermal gel DOWSIL TC-4060 [10] are assumed in the simulation. The cooling of the system is done by free convection and thermal radiation. To consider different environmental conditions the simulation is performed using different ambient temperatures of 25°C, 85°C and 125°C. The environment enclosing the DUT is unlimited in extend.

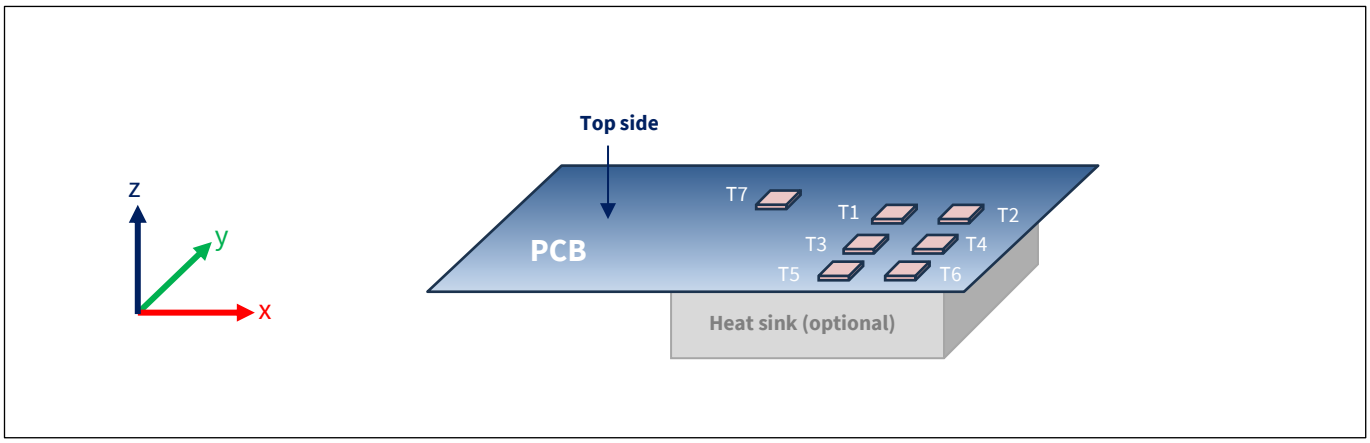

Figure 18 Thermal simulation environment

While driving the motor the power MOSFETs T1 to T7 contribute significant to the overall power losses generated at the board. If the inverter board delivers high output power to the motor the portion of power losses coming from other components on board and the PCB is low. Therefore, in the simulation only power losses of the MOSFETs T1 to T6 of the B6- bridge and the MOSFET T7 used in reverse polarity protection circuit are considered. As load for simulation a motor is assumed driven by the three phase currents of $20A_{RMS}$ each. The output power to the motor shall be about 250W, the input voltage V_{batt} is 12V, with considering the efficiency of the board this results in an input DC current to the board of about 23A. The switching frequency of the PWM controlled pulse pattern for controlling the MOSFETs and forming the sinusoidal phase output currents is set to 20KHz. The dead time between high side and low side MOSFET of each half- bridge leg is defined to 1µs.

Based on these defined conditions the estimation of power losses generated by each MOSFET has been done to set the MOSFET power losses in thermal simulation. The calculation of the power losses for the B6-bridge MOSFETs T1 to T6 incorporates the switching power losses, the power losses generated when current is flowing through the internal body diode and the conductive power losses which occur while the MOSFET is turned-on. Because of the temperature depending Drain-to-Source on state resistance $R_{DS(on)}$ the temperature rise at the die of the MOSFET caused by the power losses of the MOSFET must be considered, especially in estimation of conductive power losses. The power losses generated by MOSFET T7 are determined by conductive power losses. The Table 9 gives an overview about the power losses used in different configurations of the simulation.

Table 9 Power losses at the MOSFETs

Condition	P_{Switch} [W]	
	T1 to T6 (B6-bridge)	T7 (reverse polarity protection)
w/o heat sink, T_a = 25°C	0.83	0.33
w/ heat sink, T_a = 25°C	0.78	0.31
w/ heat sink, T_a = 85°C	0.81	0.41
w/ heat sink, T_a = 105°C	0.83	0.47

Fig. 19, 20, and 21 show the temperature distribution in various views for configuration without heat sink and an ambient temperature T_a of 25°C. As expected, the higher power losses generated by the MOSFETs of the inverter B6- bridge leads to higher temperatures in the area of the MOSFETs T1 to T6. The MOSFET T6 is the hottest MOSFET of the inverter switches, the junction temperature difference between T6 and T1 is about 3K. It becomes apparent that the asymmetrical arrangement of the MOSFETs on the top layer of the board leads to more efficient cooling of the MOSFETs in Y- direction. Because of the significant lower power loss of MOSFET T7 for reverse polarity protection the junction of T7 is nearly 20°C cooler than the junction of MOSFET T6.

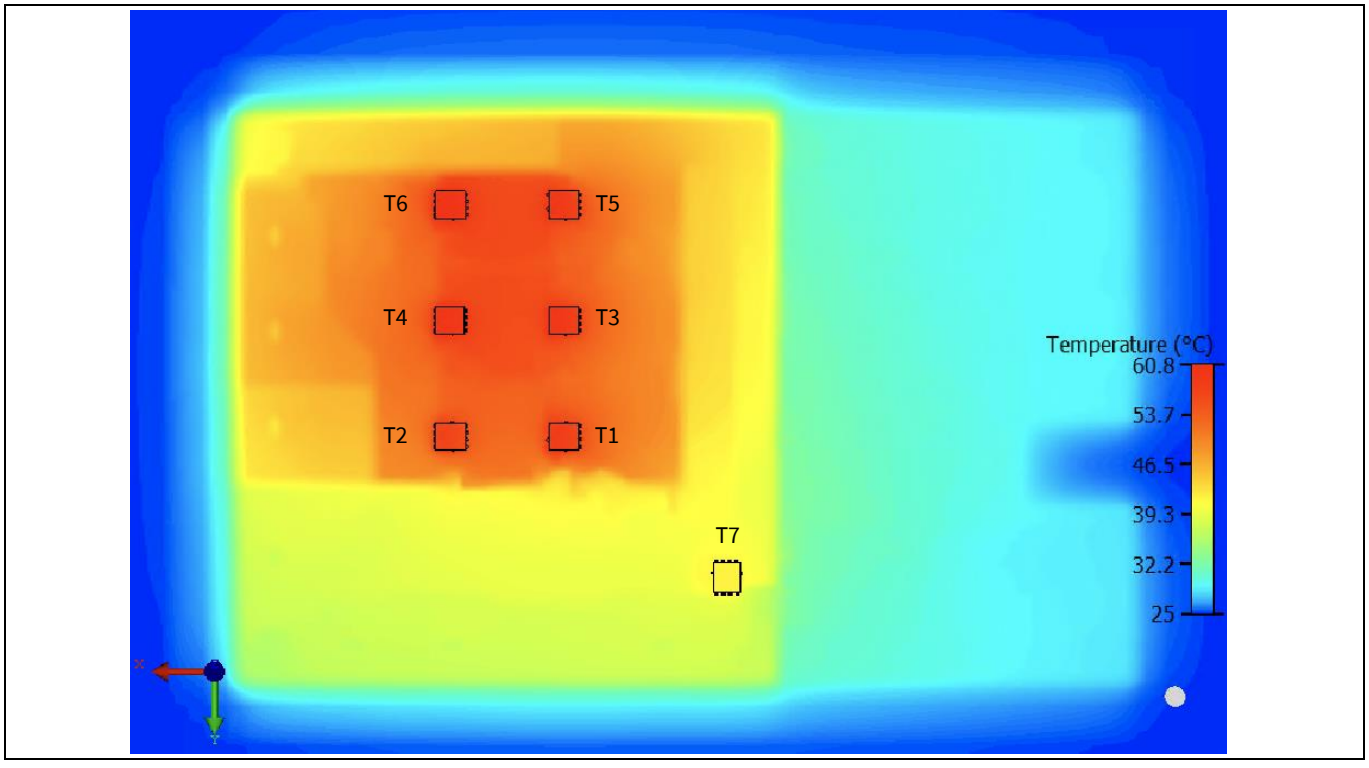

Figure 19 Thermal simulation result: top view (w/o heat sink, Ta=25°C)

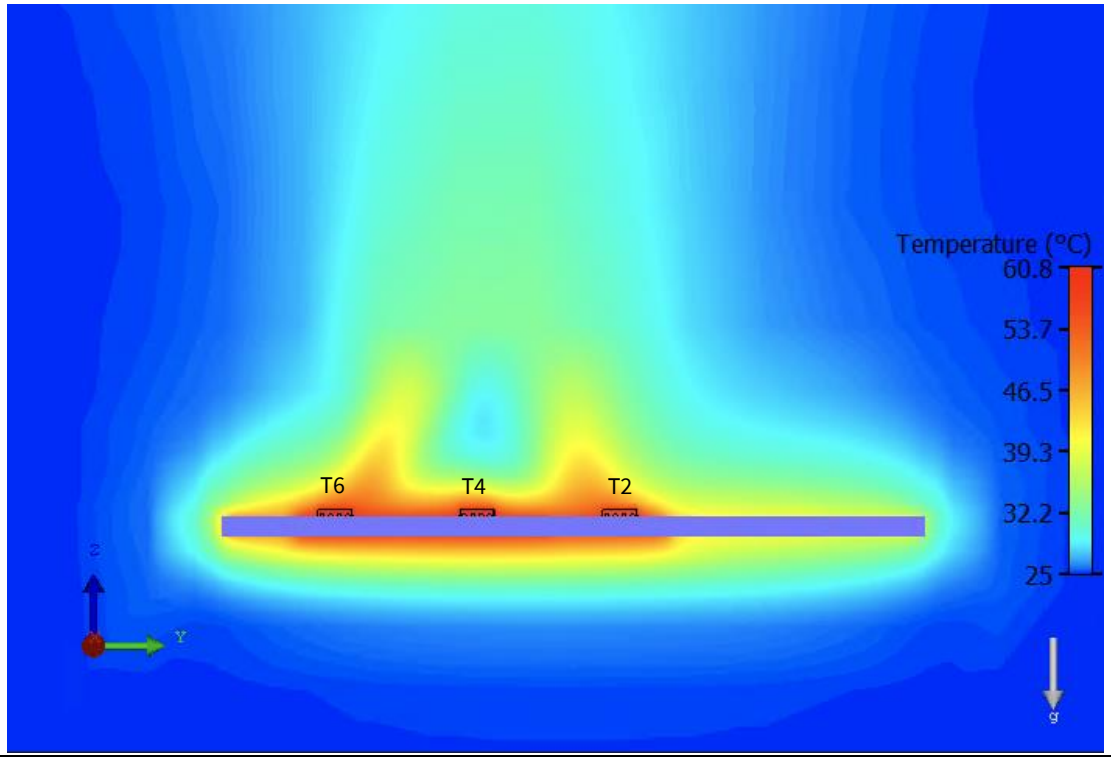

Figure 20 Thermal simulation result: X- side view (w/o heat sink, Ta=25°C)

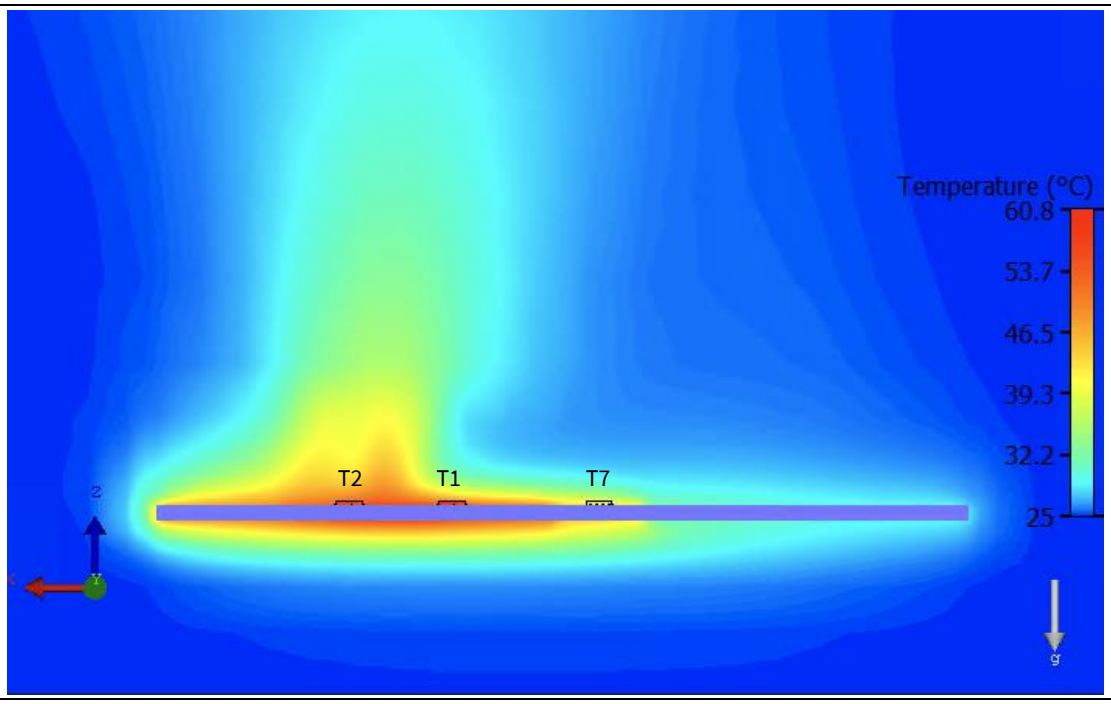

Figure 21 Thermal simulation result: Y- side view (w/o heat sink, Ta=25°C)

The diagram in Figure 22 shows the temperature profile up to settled state of the junction temperature of the MOSFETs. The temperature at the top side of the model compound package is about 0.6°C lower at all B6- bridge MOSFETs T1 to T6, the case temperature on top at MOSFET T7 is about 0.1°C lower than junction temperature.

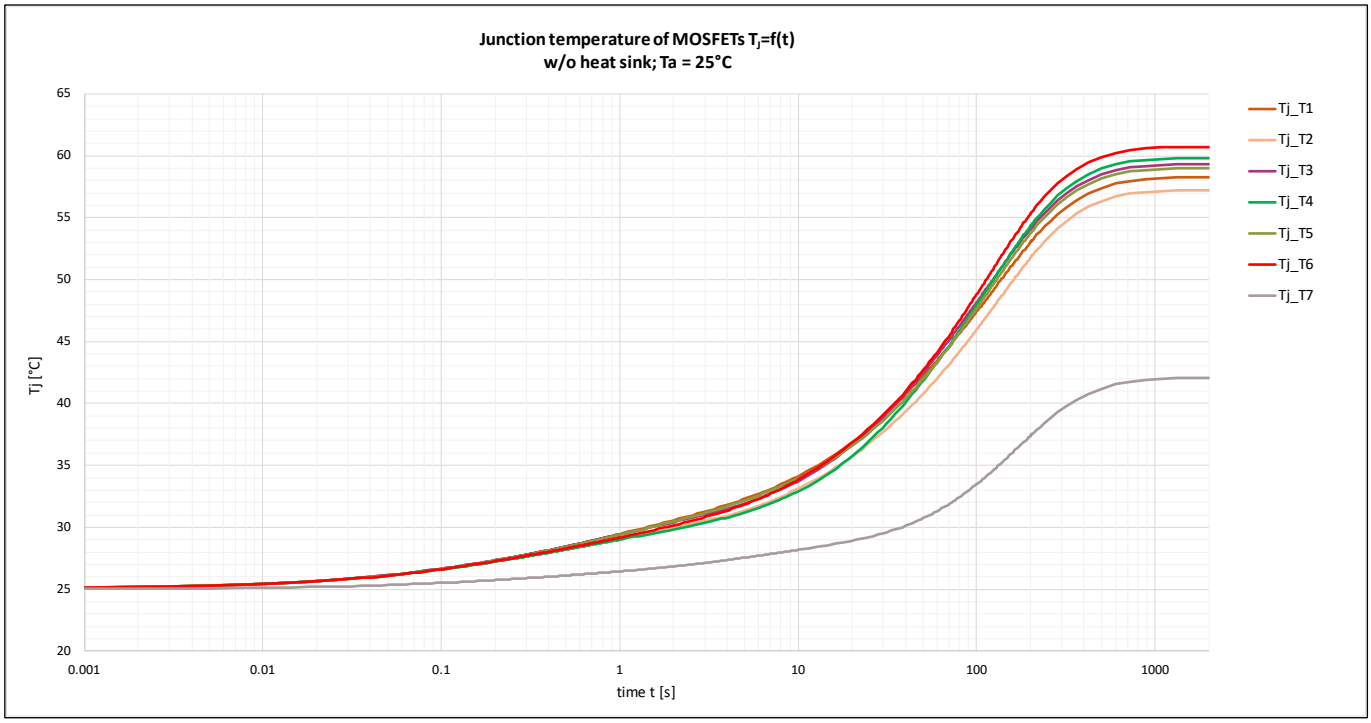

Figure 22 Temperature profile junction temperature MOSFETs (w/o heat sink, Ta=25°C)

If the head sink is mounted the temperature difference between the junction temperature of the MOSFETs T1 and T6 among each other becomes very small, the maximum junction temperature is now about 49°C at B6-bridge MOSFETs.

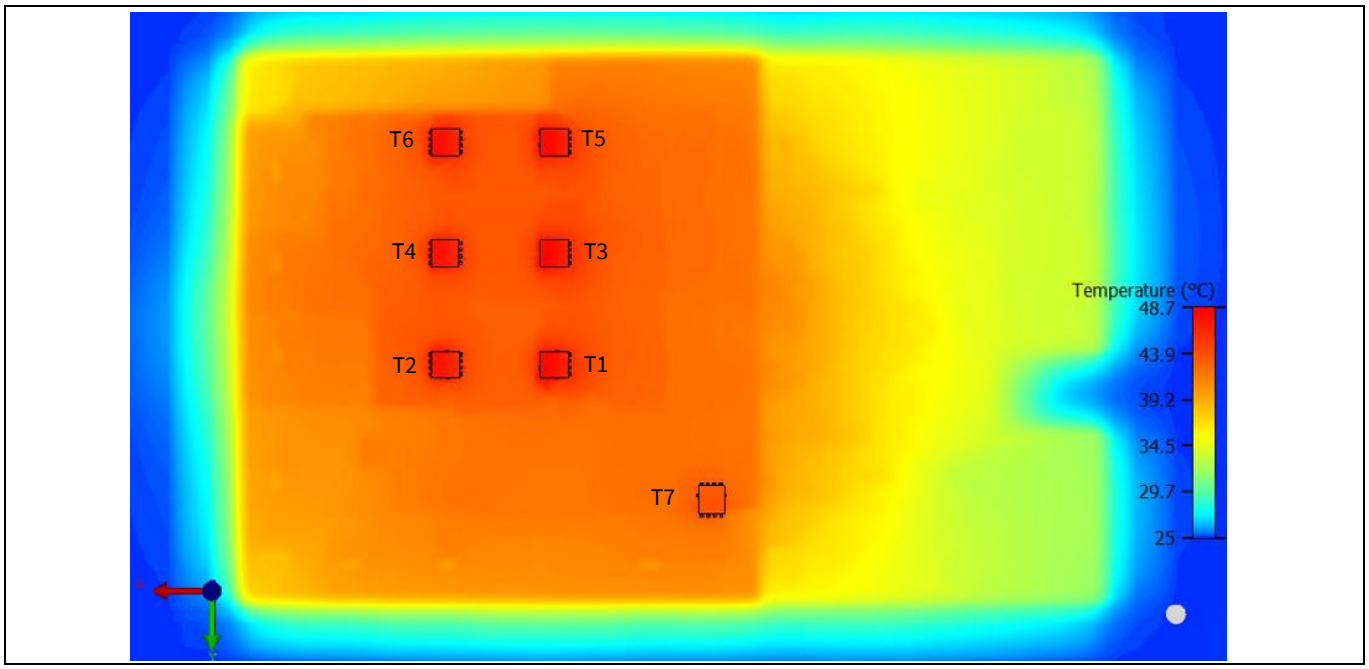

Figure 23 Thermal simulation result: top view (w/ heat sink, Ta=25°C)

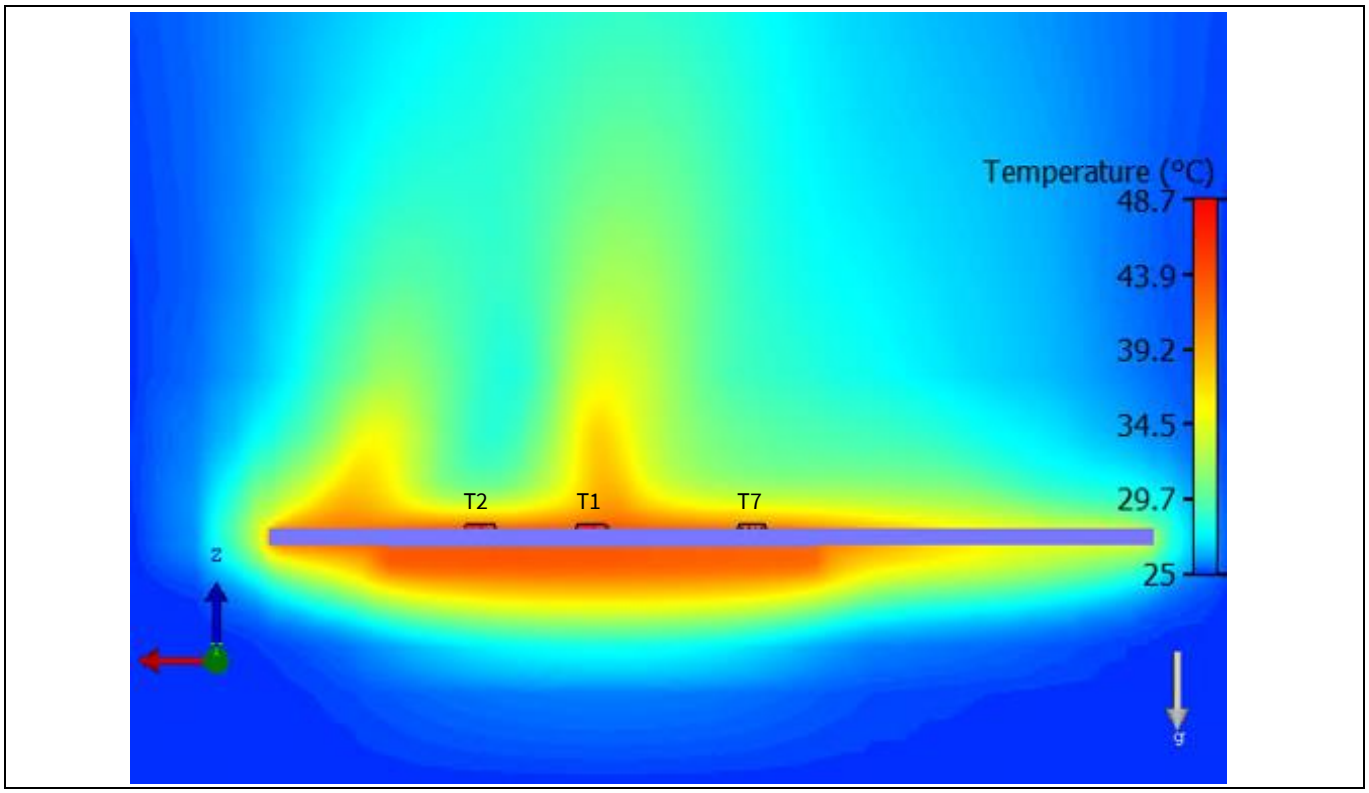

Figure 24 Thermal simulation result: Y- side view (w/ heat sink, Ta=25°C)

In Table 10 the results of all thermal simulations are summarized. Depending on the simulation conditions the maximum junction temperature of the B6- bridge MOSFETs T1 to T6 is shown. The junction temperature of MOSFET T7 is always lower than the junction temperature at the inverter switches because of the lower power losses in this MOSFET. The cooling system (PCB + heat sink) can hold the overtemperature at the die of the inverter MOSFETs nearly constant despite of higher ambient temperatures and following higher power losses generated in the MOSFET devices.

Table 10 Simulation results

Condition	T_{j_max} [°C] (B6-bridge)	ΔT [°C] ($T_{j_max} - T_a$)
w/o heat sink, T_a = 25°C	61	36
w/ heat sink, T_a = 25°C	49	24
w/ heat sink, T_a = 85°C	106	21
w/ heat sink, T_a = 105°C	126	21

Additionally, the temperatures at the inverter MOSFETs have been measured. For the measurement a thermal camera has been used. The conditions to the Generic Power Board were the same as used for the thermal simulation. The measurement has been performed at an ambient temperature of 25°C and without using a heat sink on bottom side of the board. The measurement results have shown higher temperatures on the top side of the MOSFETs in comparison to the results of the thermal simulation. In average the case temperatures in measurement are about 7°C larger than the simulation has outputted. The cause of the difference is mainly the calculated value of power loss which is generated by each MOSFET. Especially the conductive power losses of the MOSFETs depend on the die temperature in settled state which is unknown and must be predicted. Furthermore, all power losses of other components are neglected in simulation, but these components cause power losses either and affect the PCB temperature, and finally the junction temperature at the MOSFETs too. In order to get precise temperature measurement results using a thermal camera the board is covered by an additional black colored layer which impacts the free convection marginally.

By the way, independent of the deviation between simulation and measurement the simulation results are needful to demonstrate the thermal behavior of the board depending on the load and the environmental conditions. The simulation results help to configure the board in terms of needed MOSFET performance and to define the requirement of the cooling system to ensure operation within the allowed maximum ratings of the MOSFETs and the other components of the system.

4 Project Collaterals

4.1 Schematics

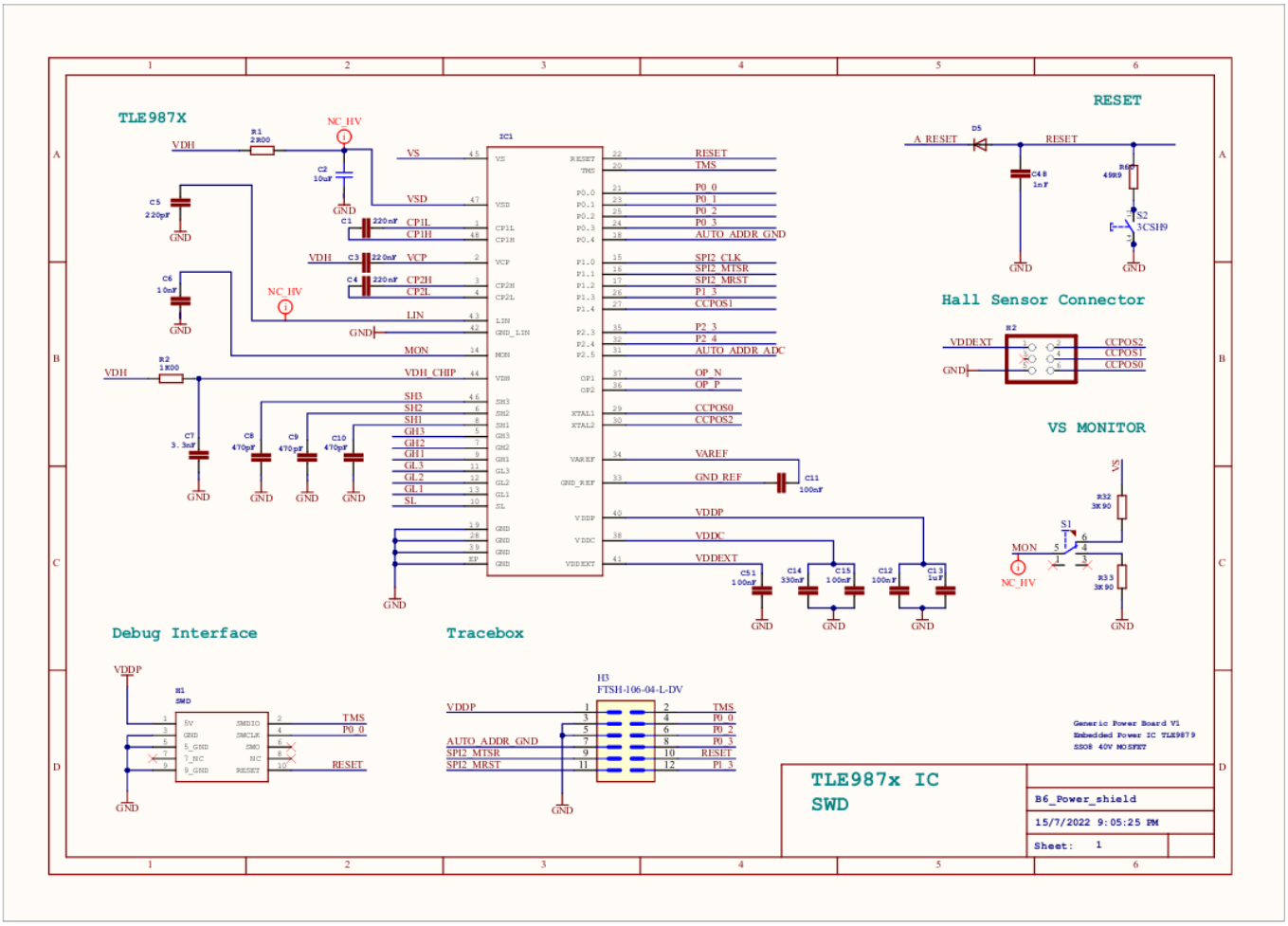

Figure 25 Circuit diagram page 1 from 5

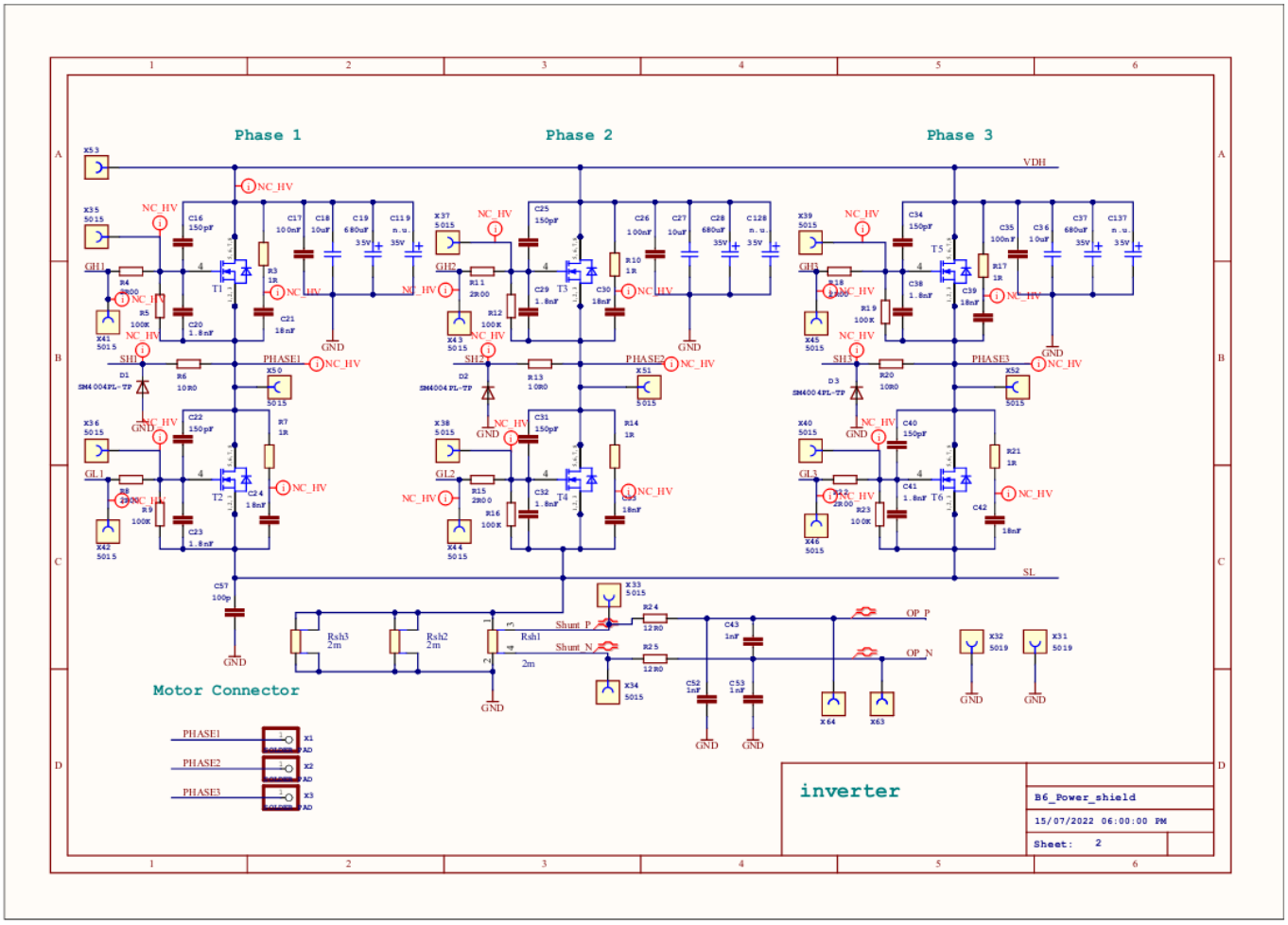

Figure 26 Circuit diagram page 2 from 5

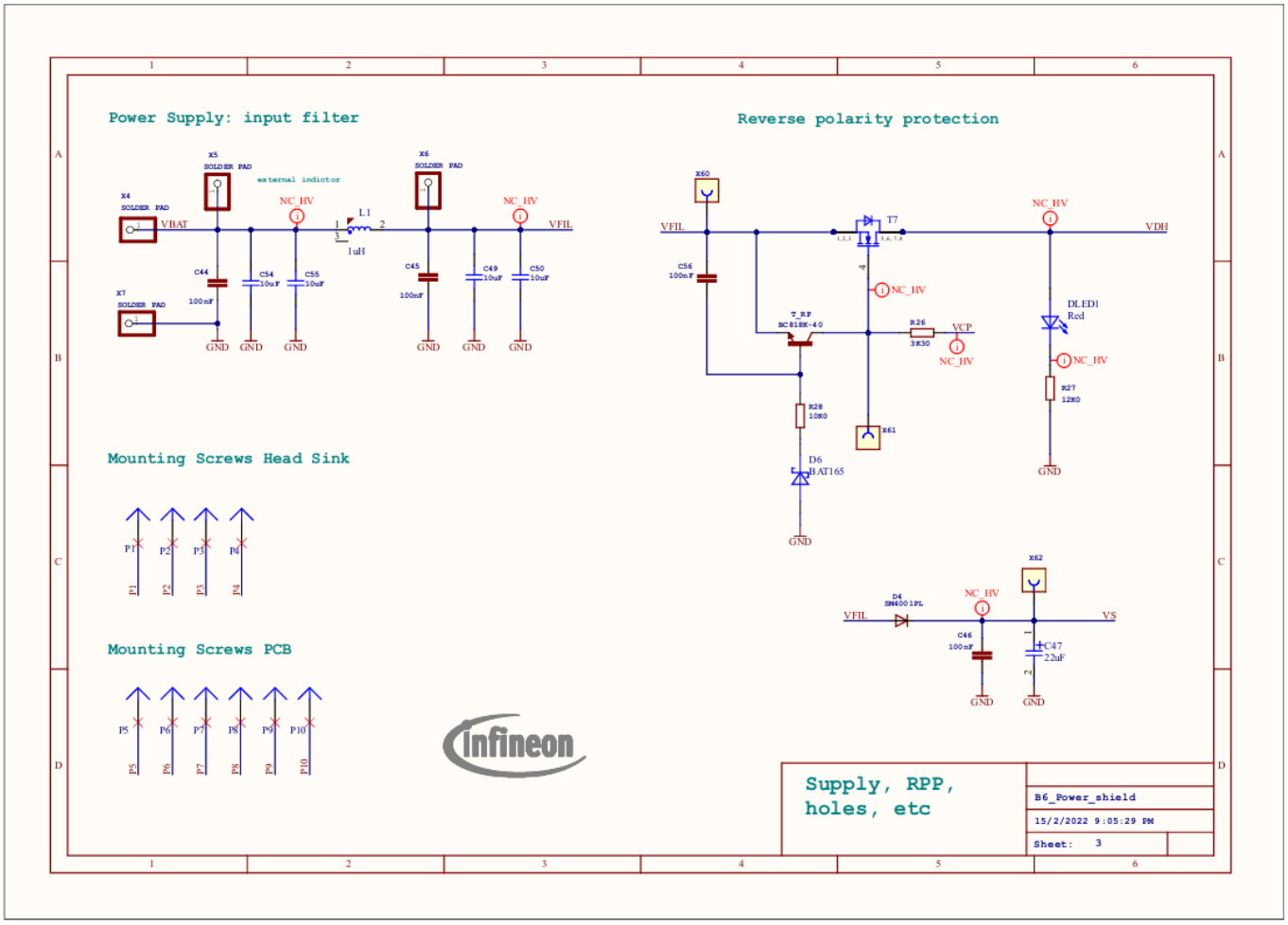

Figure 27 Circuit diagram page 3 from 5

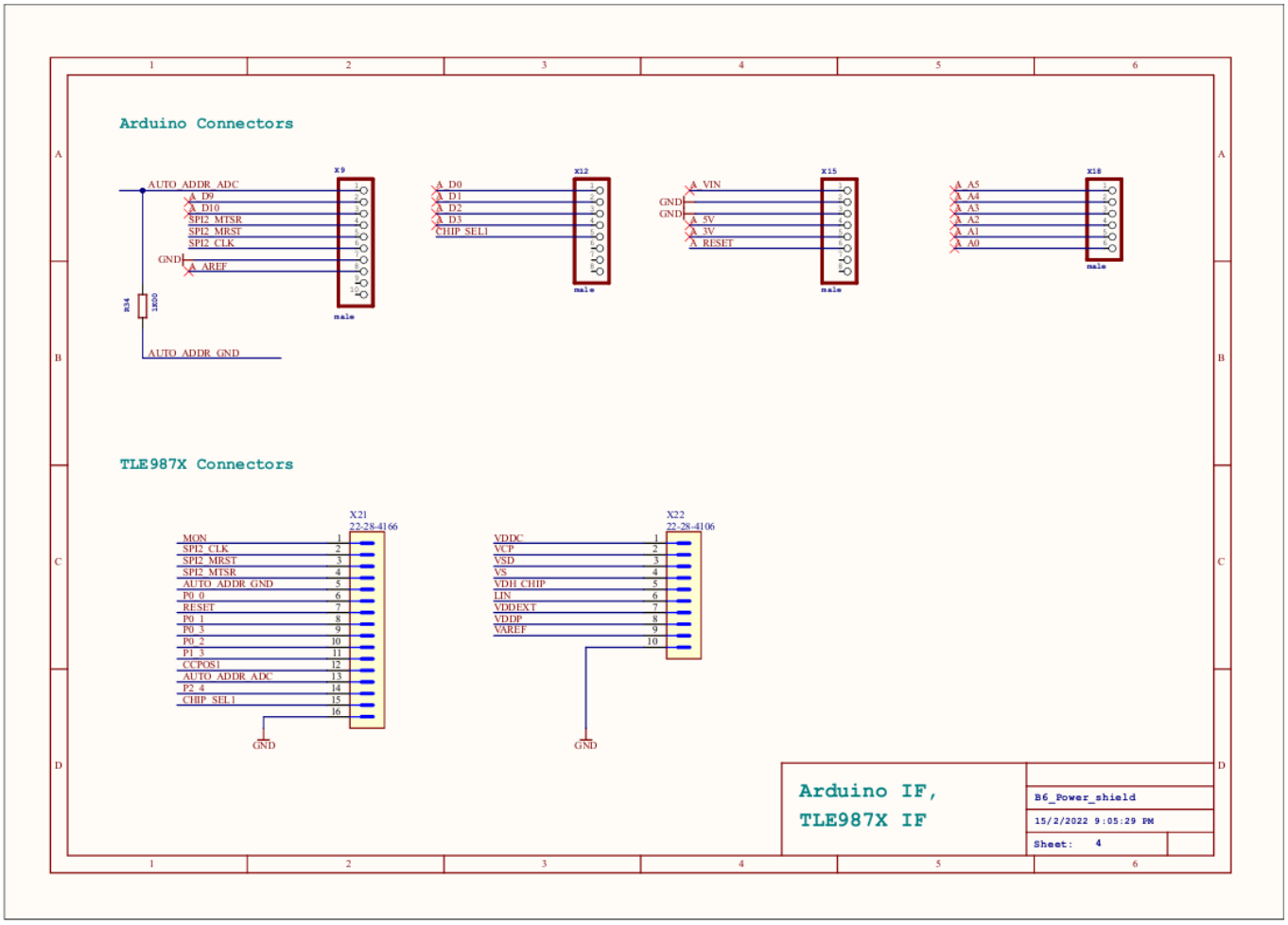

Figure 28 Circuit diagram page 4 from 5

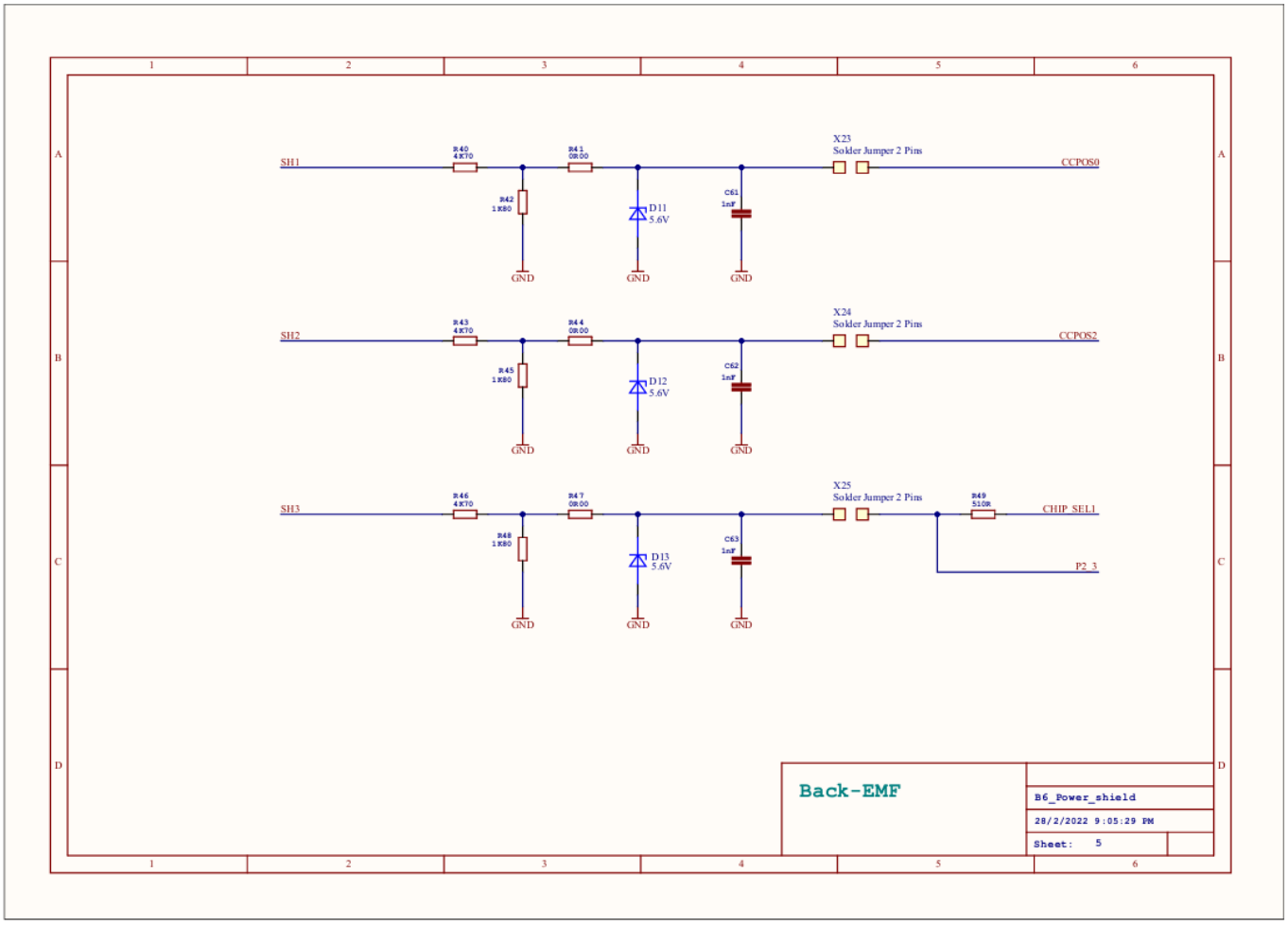

Figure 29 Circuit diagram page 5 from 5

4.2 Bill of Material

Table 11 Bill of material

	Designator	Value	Description	Vendor	Part Number	Quantity
1	C1, C3, C4	220nF	CAPACITOR MLCC 50V/X7R/0603	Murata	GCM188R71H224KA64#	3
2	C2,C18,C27,C36,C49, C50,C54,C55	10uF	CAPACITOR MLCC 50V/X7S/1210	Murata	GCM32EC71H106KA03L	8
3	C5	220pF	CAPACITOR MLCC 100V/C0G/0603	Murata	GCM1885C2A221JA16#	1
4	C6	10nF	CAPACITOR MLCC 50V/X7R/0603	Murata	GCM188R72A103KA37J	1
5	C7	3.3nF	CAPACITOR MLCC 50V/C0G/0603	Murata	GCM1885C1H332JA16J	1
6	C8, C9, C10	470pF	CAPACITOR MLCC 50V/C0G/0603	Murata	GCM1885C2A471JA16#	3
7	C11, C12, C15, C17, C26, C35, C44, C45, C46, 51, C56	100nF	CAPACITOR MLCC 50V/X7R/0603	Taiyo Yuden	UMK107B7104KAHT	11
8	C13	1uF	CAPACITOR MLCC 16V/X7R/0603	Murata	GCM188R71C105KA64J	1
9	C14	330nF	CAPACITOR MLCC 16V/X7R/0603	Murata	GCM188R71C334KA37#	1
10	C16, C22, C25, C31, C34, C40	150pF	CAPACITOR MLCC 50V/C0G/0603	Murata	GCM1885C2A151JA16#	0
11	C19, C28, C37	680uF	POLARIZED CAP. 35V/12.5x13.5/SMD	Panasonic	EEE-FK1V681AQ	3
12	C20, C23, C29, C32, C38, C41	1.8nF	CAPACITOR MLCC 50V/C0G/0603	Murata	GCM1885C1H182JA16#	0
13	C21, C24, C30, C33, C39, C42	18nF	CAPACITOR MLCC 50V/X7R/0603	Murata	GCM188R72A183KA37J	6
14	C43, C48, C52, C53	1nF	CAPACITOR MLCC 50V/C0G/0603	Murata	GCM1885C2A102JA16#	4
15	C61, C62, C63	1nF	CAPACITOR MLCC 50V/C0G/0603	Murata	GCM1885C2A102JA16#	0
16	C47	22uF	POLARIZED CAP. 50V/6.3x5.8/SMD	Panasonic	EEE-HC1V220P	1
17	C57	100p	CAPACITOR MLCC 50V/C0G/0603	Murata	GCM1885C1H101FA16D	1
18	C119, C128, C137	680uF	POLARIZED CAP. 35V/10.0x16.8/SMD	Panasonic	EEH-ZS1V681UV	0
19	D1, D2, D3, D4, D5	DIODE	DIODE 50V/1A/SOD123FL	MCC	SM4001PL-TP	6
20	D6	DIODE	SCHOTTKY 40V 750mA/SOD323-2	Infineon	BAT165E6327HTSA1	1
21	D11, D12, D13	DIODE	ZENER 5.6V 500mW/SOD123	OnSemi	MMSZ5V6T1G	0

	Designator	Value	Description	Vendor	Part Number	Quantity
22	DLED1	LED red	LED RED 20mA 1.9V/3.2x1.6x1.1	Rohm	SML-S13UTT68	1
23	H1	10pin 50mil	HEADER 10pin DIL 1.27mm SMD	Samtec	FTSH-105-01-F-DV-K-TR	1
24	H2	6pin 100mil	HEADER 6pin DIL 2.54mm TH	Samtec	TSW-103-07-F-D	1
25	H3	12pin 50mil	HEADER 12pin DIL 1.27mm SMD	Samtec	FTSH-106-01-F-DV-K-TR	0
26	IC1	TLE9879QX	MC w/ LIN DLDC MOSFET driver	Infineon	TLE9879QXW40	1
27	L1	1µH	INDUCTOR 30A/1.2mΩ	TDK	B82559A2102A019	1
28	R1, R4, R8, R11, R15, R18, R22	2R00	RESISTOR 75V/100mW/0603	Vishay	CRCW06032R00FKEAC	7
29	R2, R34	1K00	RESISTOR 75V/100mW/0603	Vishay	CRCW06031K00FKEAC	2
30	R3, R7, R10, R14, R17, R21	1R00	RESISTOR 150V/125mW/0805	Vishay	CRCW08051R00FKTA	6
31	R5, R9, R12, R16, R19, R23	100K	RESISTOR 75V/100mW/0603	Vishay	CRCW0603100KFKEAC	6
32	R6, R13, R20	10R0	RESISTOR 75V/100mW/0603	Vishay	CRCW060310R0FKEAC	3
33	R24, R25	12R	RESISTOR 75V/100mW/0603	Vishay	CRCW060312R0FKEAC	2
34	R26	3K30	RESISTOR 75V/100mW/0603	Vishay	CRCW06033K30FKEAC	1
35	R27	12K0	RESISTOR 75V/100mW/0603	Vishay	CRCW060312K0FKEAC	1
36	R28	10K0	RESISTOR 75V/100mW/0603	Vishay	CRCW060310K0FKEAC	1
37	R32, R33	3K90	RESISTOR 75V/100mW/0603	Vishay	CRCW06033K90FKEAC	2
38	R40, R43, R46	4K70	RESISTOR 75V/100mW/0603	Vishay	CRCW06034K70FKEAC	0
39	R41, R44, R47	0R00	RESISTOR 75V/100mW/0603	Vishay	CRCW06030000Z0EBC	0
40	R42, R45, R48	1K80	RESISTOR 75V/100mW/0603	Vishay	CRCW06031K80FKEA	0
41	R49	510R	RESISTOR 75V/100mW/0603	Bourns	CR0603-FX-5100ELF	0
42	R60	49R9	RESISTOR 75V/100mW/0603	Vishay	CRCW060349R9FKEAC	1
43	Rsh1, Rsh2	2mR	SHUNT RESISTOR 2W/50ppm/2512	Bourns	CRE2512-FZ-R002E-2	2
44	Rsh3	2mR	SHUNT RESISTOR 2W/50ppm/2512	Bourns	CRE2512-FZ-R002E-2	0

	Designator	Value	Description	Vendor	Part Number	Quantity
45	S1	SWITCH	SWITCH Toggle 100mA/28V/TH	NKK Switches	G12AP	1
46	S2	PUSH BUTTON	PUSH BUTTON 50mA/24V/SMD	Apem	3CSH9	1
47	T1, T2, T3, T4, T5, T6	TDSON-8-53	MOSFET N-FET 40V/175A/1mΩ	Infineon	IAUC120N04S6N010	6
48	T7	TDSON-8-53	MOSFET N-FET 40V/175A/0.6mΩ	Infineon	IAUC120N04S6N006	1
49	T_RP	BC818K-40	TRANSISTOR NPN 25V/500mA/SOT23	Infineon	BC818K-40	1
50	X9	Vertical 10pos.	HEADER 100mil 10pos./gold	Amphenol ICC	77311-818-10LF	0
51	X22	Vertical 10pos.	HEADER 100mil 10pos./gold	Amphenol ICC	77311-818-10LF	1
52	X12, X15	Vertical 8pos.	HEADER 100mil 8pos./gold	Amphenol ICC	77311-818-08LF	0
53	X18	Vertical 6pos.	HEADER 100mil 6pos./gold	Amphenol ICC	77311-818-06LF	0
54	X21	Vertical 16pos.	HEADER 100mil 10pos./gold	Amphenol ICC	77311-818-16LF	1
55	X31, X32	5019	TEST POINT SMD	Keystone Electronics	5019	2
56	X33, X34, X35, X36, X37, X38, X39, X40, X41, X42, X43, X44, X45, X46, X50, X51, X52	5015	TEST POINT SMD	Keystone Electronics	5015	17

4.3 Layout

4.3.1 PCB Stack

The PCB is designed as a 6-layer, standard FR4 board. The layer stack configuration is shown in Figure 30.

Number	Name	Type	Material	Thickness (mil)
	Top Overlay	Overlay	silkscreen	
	Top Solder	Solder Mask	Solder Resist	0.4
1	TOP	Signal	copper	2.8
	Dielectric 1	Core	FR-4	10
2	Inner_layer_2	Signal	copper	1.4
	Dielectric 2	Prepreg	FR-4	10
3	Inner_layer_3	Signal	copper	1.4
	Dielectric 3	Core	FR-4	10
4	Inner_layer_4	Signal	copper	1.4
	Dielectric 4	Prepreg	FR-4	10
5	Inner_layer_4	Signal	copper	1.4
	Dielectric 5	Core	FR-4	10
6	BOT	Signal	copper	2.8
	Bottom Solder	Solder Mask	Solder Resist	0.4
	Bottom Overlay	Overlay	silkscreen	

Figure 30 PCB layout printing of 6 Copper layers

4.3.2 Layout Printing

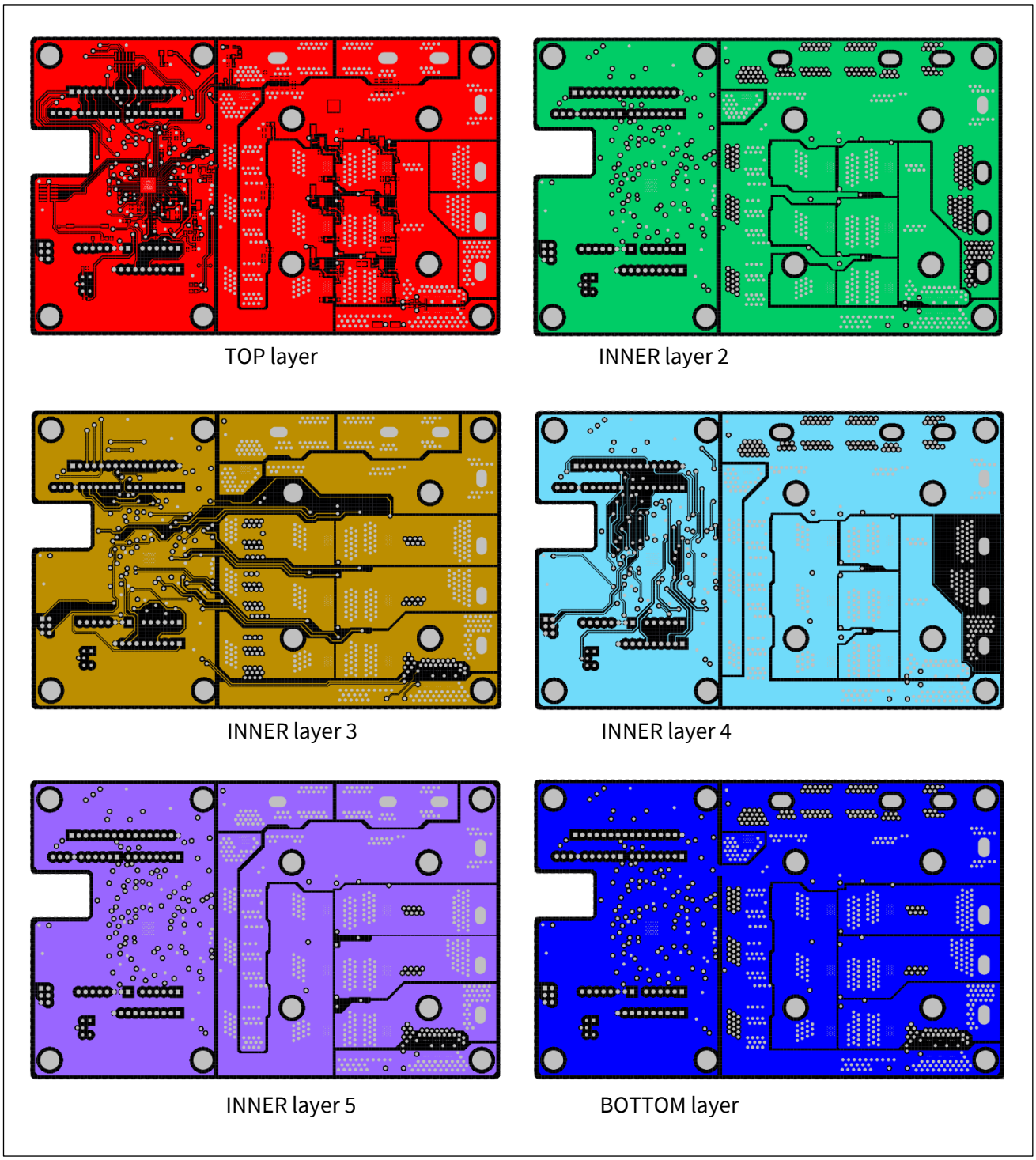

Figure 31 PCB layout printing of 6 Copper layers

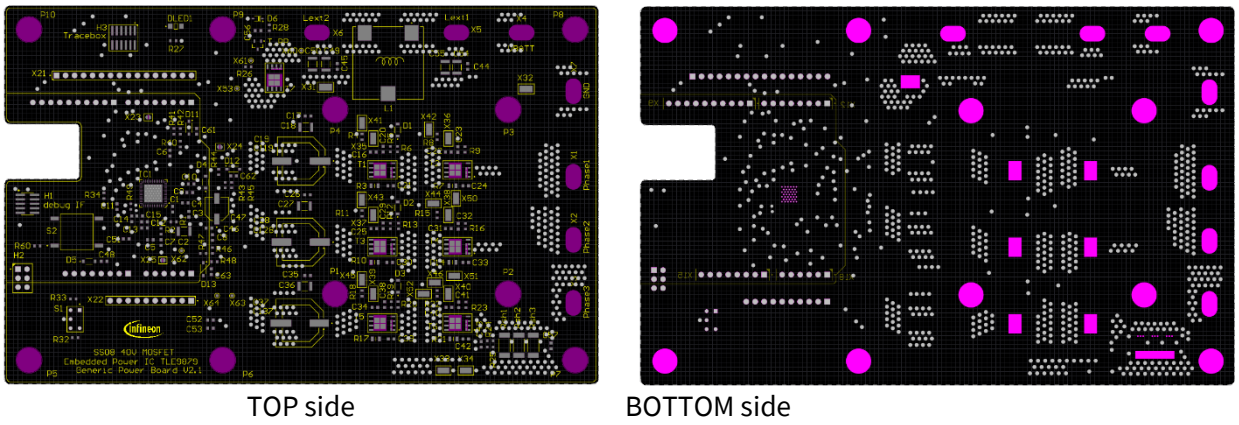

Figure 32 PCB layout printing of overlay, paste and solder layers

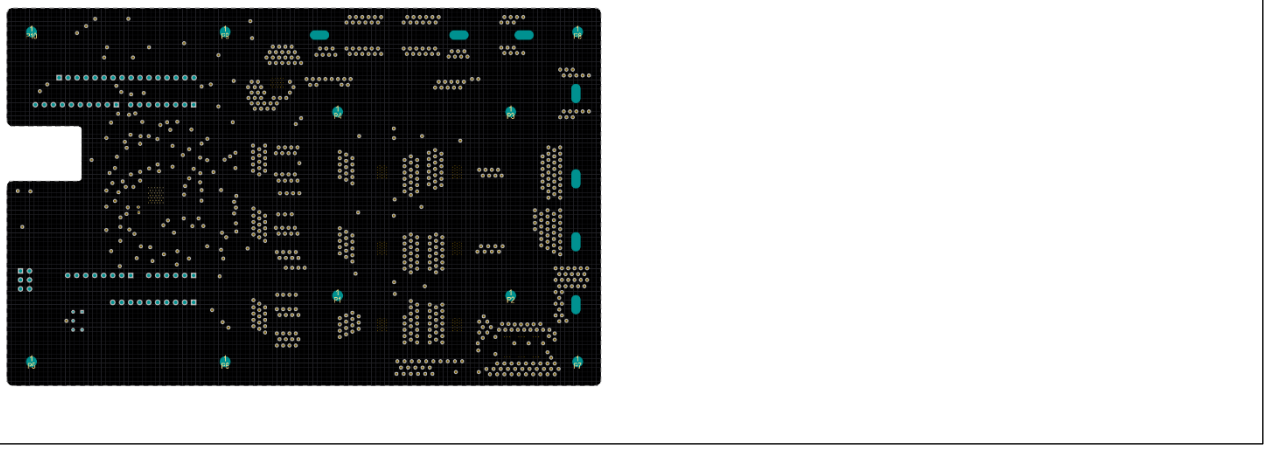

Figure 33 Drill configuration

5 Abbreviations and definitions

Table 12 Abbreviations

Abbreviation	Definition
AC	Alternating Current
ARM	Advanced RISK Machine
ADC	Analogue-to-Digital Conversion
BDRV	Bridge Driver Module of Embedded Power IC
BLDC	Brushless Direct Current
BOM	Bill of material
CISPR	Comité International Spécial des Perturbations Radioélectriques
DC	Direct Current
DIL	Dual-In-Line
DUT	Device Under Test
ECU	Electrical Control Unit
ECF	Engine Cooling Fan
EMC	Electromagnetic Compatibility
ESR	Equivalent Series Resistant
FOC	Field Oriented Control
GPIO	General Purpose Input/Output
IC	Integrated Circuit
LIN	Local Interconnect Network
LISN	Line Impedance Stabilization Network
MCU	Microcontroller Unit
MI	Modulation Index
MLCC	Multi-Layer-Ceramic Capacitor
MOSFET	Metal Oxide Semiconductor Field Effect Transistor
PCB	Printed Circuit Board
PG-TDSON	Plastic Green- Thin Dual Small-Outline Non-leaded
PWM	Pulse Width Modulation
RAM	Random Access Memory
RBP	Reverse Battery Protection
RC	Resistor-Capacitor
RISC	Reduced Instruction Set Computer
RMS	Root-Mean-Square value
S3O8	Shrink Super Small-Outline 8 pin
SDK	Software Development Kit
SMD	Surface-Mounted Device
SMT	Surface-Mounted Technology

SoC	System On a Chip
SOA	Safe Operating Area
SSO8	Super Small-Outline 8 pin
TIM	Thermal Interface Material
TH	Through Hole

6 Reference documents

This document should be read in conjunction with the following documents:

[1] TLE9879QXA40 data sheet, Infineon Technologies AG, https://www.infineon.com/dgdl/Infineon-TLE9879QXA40-DataSheet-v02_00-EN.pdf?fileId=8ac78c8c81ae03fc0181d840096a3c2f

[2] XMC Link user's manual, Infineon Technologies AG, https://www.infineon.com/dgdl/Infineon-XMC_Link_Board_Users_Manual.pdf-UserManual-v01_00-EN.pdf?fileId=5546d462518ffd850152451695e45edc

[3] TLE986x_TLE987x Bridge Driver Application Note, 2022-05-02, Infineon Technologies AG, Rev 1.03 https://www.infineon.com/dgdl/Infineon-AppNote-TLE986x-TLE987x-FAQ-Application-Hints_3-ApplicationNotes-v01_03-EN.pdf?fileId=5546d4625b62cd8a015ba9870bd91373

[4] IAUC120N04S6N010 datasheet, Infineon Technologies AG, https://www.infineon.com/dgdl/Infineon-IAUC120N04S6N010-DataSheet-v01_00-EN.pdf?fileId=5546d4626c1f3dc3016c4c43cb2e1748

[5] IAUC120N04S6N006 datasheet, Infineon Technologies AG, https://www.infineon.com/dgdl/Infineon-IAUC120N04S6N006-DataSheet-v01_00-EN.pdf?fileId=5546d46275b79adb0175e120b4b310b3

[6] Analytical calculation of the RMS current stress on the DC-link capacitor of voltage-PWM converter systems, 2006-07, IEE Proc.-Electr. Power Appl., Vol. 153, No.4.

[7] Snubber Capacitors Application Guide, 2018-01, Cornell Dubilier

[8] ERU chokes datasheet, TDK, https://www.tdk-electronics.tdk.com/inf/30/ds/B82559B_A019.pdf

[9] Heat sink profile, RS-Online, https://de.rs-online.com/web/p/kuhlkorper/1686330

[10] Thermal interface material TIM, DOWSIL™ TC-4060 Thermal Gel, https://www.dow.com/en-us/pdp.dowsil-tc-4060-thermal-gel.512275z.html?productCatalogFlag=1&#tech-content

[11] Motor load, Nanotc DB42S02, https://en.nanotec.com/products/635-db42s02

[12] Current controlled hysteresis break, Mobac HB-50-2DS, https://www.mobac.de/fileadmin/user_upload/Mobac/PDF/strom/strom-stand-bs.pdf

[13] User Manual TLE987x Microcontroller with LIN and BLDC MOSFET driver for automotive applications https://www.infineon.com/dgdl/Infineon-TLE987x_UM-UserManual-v01_08-EN.pdf?fileId=8ac78c8c81ae03fc0181d38669525fab

[14] Reverse Polarity Protection for Embedded Power ICs Application Note, https://www.infineon.com/dgdl/Infineon-Reverse_Polarity_Protection-AN-v01_00-EN.pdf?fileId=5546d46267c74c9a01684be08bf45dfb

Revision history

Major changes since the last revision

Date	Version	Description
2023/09/12	1.0	First revision

Trademarks
All referenced product or service names and trademarks are the property of their respective owners.

Edition 2023- 09-12

Published by

Infineon Technologies AG

81726 Munich, Germany

© 2023 Infineon Technologies AG. All Rights Reserved.

Do you have a question about this document?

Email: erratum@infineon.com

Document reference

IMPORTANT NOTICE

The information contained in this application note is given as a hint for the implementation of the product only and shall in no event be regarded as a description or warranty of a certain functionality, condition or quality of the product. Before implementation of the product, the recipient of this application note must verify any function and other technical information given herein in the real application. Infineon Technologies hereby disclaims any and all warranties and liabilities of any kind (including without limitation warranties of non-infringement of intellectual property rights of any third party) with respect to any and all information given in this application note.

The data contained in this document is exclusively intended for technically trained staff. It is the responsibility of customer's technical departments to evaluate the suitability of the product for the intended application and the completeness of the product information given in this document with respect to such application.

For further information on the product, technology, delivery terms and conditions and prices please contact your nearest Infineon Technologies office (**www.infineon.com**).

WARNINGS

Due to technical requirements products may contain dangerous substances. For information on the types in question please contact your nearest Infineon Technologies office.

Except as otherwise explicitly approved by Infineon Technologies in a written document signed by authorized representatives of Infineon Technologies, Infineon Technologies' products may not be used in any applications where a failure of the product or any consequences of the use thereof can reasonably be expected to result in personal injury.