Index

Page	Schematics Page Name
01	Revision History
02	Top Level
03	TLD5099
04	Power Stage and Input Filter
05	Output Filter, PWM dimming and HB activation
06	
07	
08	
09	
10	

01_Revision_History.SchDoc

Revision History

Rev.	Rel.	Date	Author	Description	Page(s)
1.0		12/2019	KC	- Initial design	
1.1		02/2020	KC	- Changed supply voltage for EN/PWMI to VBAT_F	

LED_Front_HB_LB_Ref

Default_Assembly

V1.1

Infineon Technologies AG
IFAT DC ATV BP ASE SE
Siemensstrasse 2, 9500 Villach

02/2020

Link to Top Level Document

02 Top Level
02_Top_Level.SchDoc

LEGAL DISCLAIMER
THE INFORMATION GIVEN IN THIS DOCUMENT IS GIVEN FOR ILLUSTRATING PURPOSES ONLY. THE RECIPIENT OF THIS DOCUMENT MUST VERIFY ANY FUNCTION DESCRIBED HEREIN IN THE REAL APPLICATION. INFINEON TECHNOLOGIES HEREBY DISCLAIMS ANY AND ALL WARRANTIES AND LIABILITIES OF ANY KIND (INCLUDING WITHOUT LIMITATION WARRANTIES OF NON-INFRINGEMENT OF INTELLECTUAL PROPERTY RIGHTS OF ANY THIRD PARTY) WITH RESPECT TO ANY AND ALL INFORMATION GIVEN IN THIS DOCUMENT.

Infineon Technologies AG
IFAT DC ATV BP ASE SE
Siemensstrasse 2, 9500 Villach

Title	LED_Front_HB_LB_Ref		
Variant	Default_Assembly	Approved	<Appr.>
Size: A3	Document Name: 01_Revision_History.SchDoc	Rel.	Rev. V1.1
Author: Kofler Chr.			
Date: 04.06.2020 Time: 14:54:11	SVN Revision: 07ae7b57315acbdb3cb94e9b855		
© Infineon Technologies AG 2019. All Rights Reserved.	Sheet 1 of 5		

02_Top_Level.SchDoc

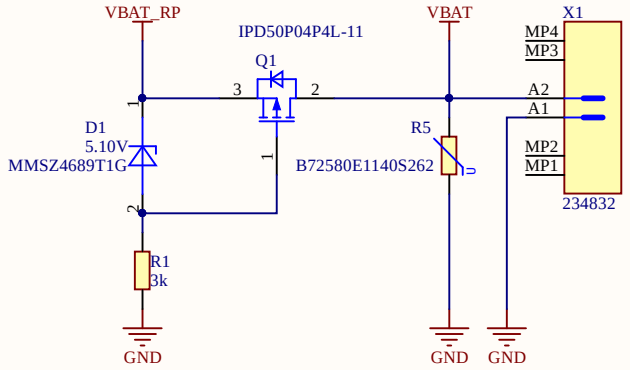

VIN 8...16V

VIN,Transient 4.5V...35V

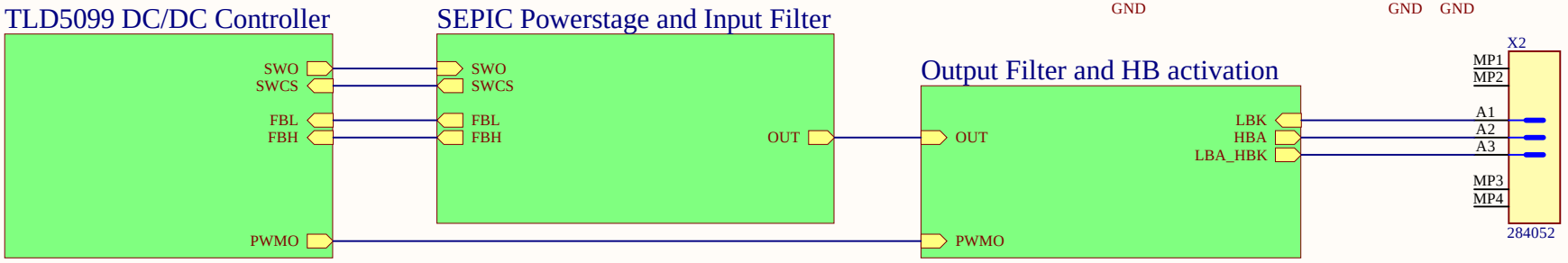

LB Kathode
HB Anode
LB A, HB K (Tap)

Infineon Technologies AG
IFAT DC ATV BP ASE SE
Siemensstrasse 2, 9500 Villach

Title	LED_Front_HB_LB_Ref		
Variant	Default_Assembly	Approved	<Appr.>
Size: A4	Document Name: 02_Top_Level.SchDoc	Rel.	Rev. V1.1
Author: Kofler Chr.			
Date: 04.06.2020 Time: 14:54:12	SVN Revision: 7acd7756352367e48290518fba3		
© Infineon Technologies AG 2019. All Rights Reserved.	Sheet 2 of 5		

03_TLD5099.SchDoc

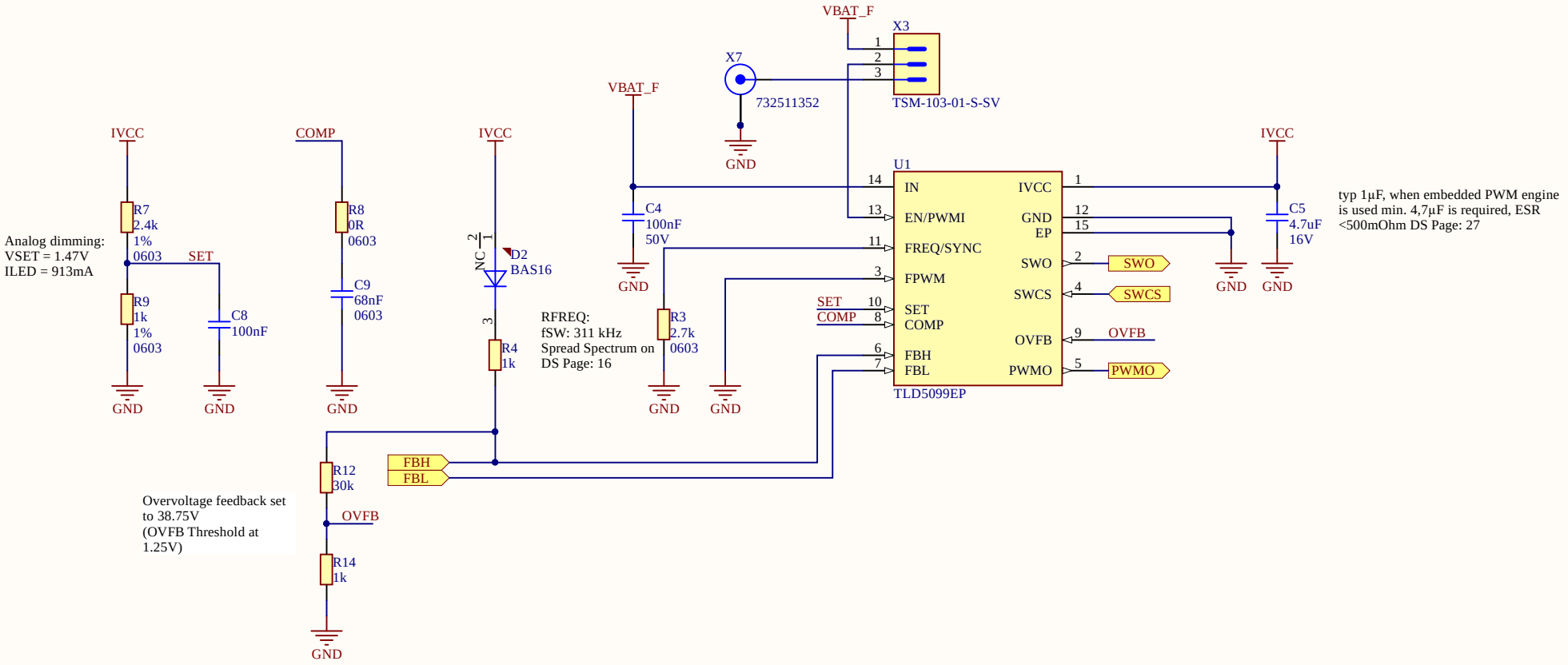

Infineon Technologies AG
IFAT DC ATV BP ASE SE
Siemensstrasse 2, 9500 Villach

Title	LED_Front_HB_LB_Ref		
Variant	Default_Assembly	Approved	<Appr.>
Size: A4	Document Name: 03_TLD5099.SchDoc	Rel.	Rev. V1.1
Author: Kofler Chr.			
Date: 04.06.2020 Time: 14:54:12	SVN Revision: 10a081f80c7e0d11804e22330c7		
© Infineon Technologies AG 2019. All Rights Reserved.	Sheet 3 of 5		

04_PowerStage_InputFilter.SchDoc

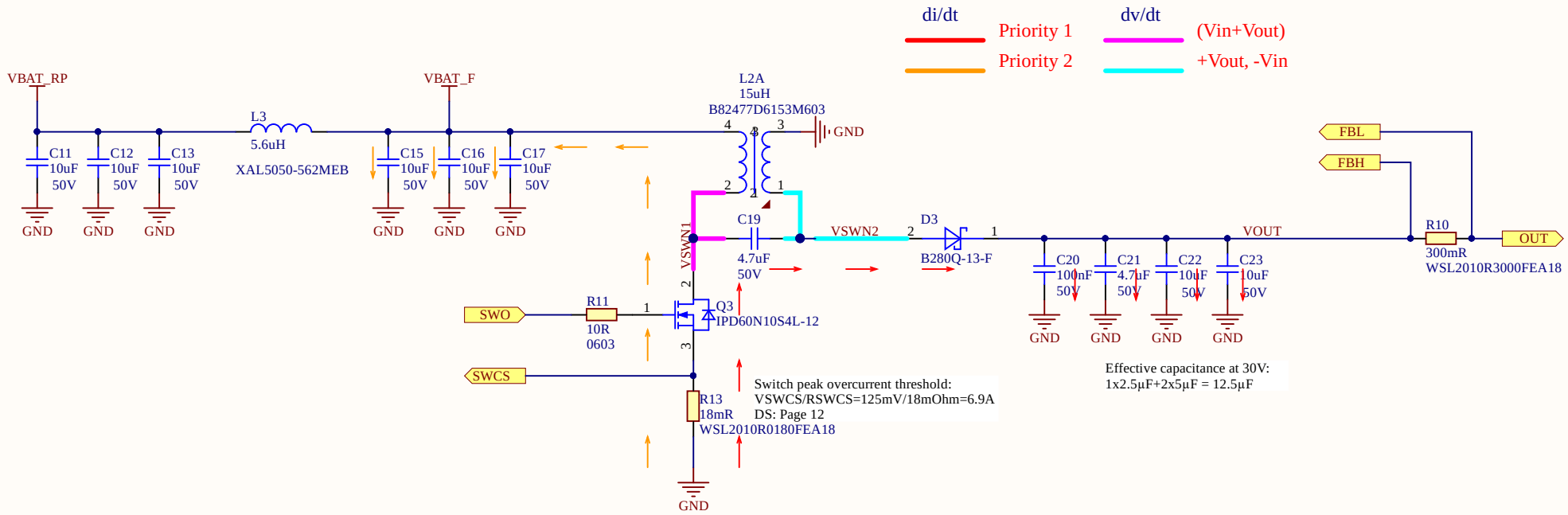

DC-Bias effect on output caps:
effective capacitance 2.5µF at 30V
Switch to 100V caps does not improve the siutation

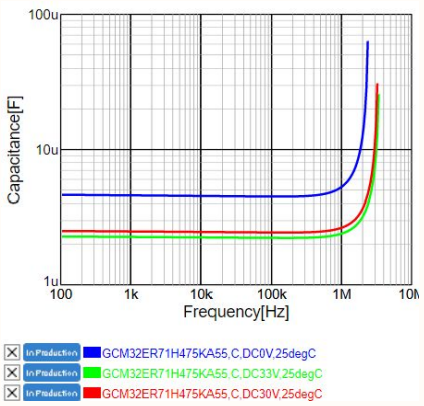

Infineon Technologies AG **IFAT DC ATV BP ASE SE** Siemensstrasse 2, 9500 Villach			
Title	LED_Front_HB_LB_Ref		
Variant	Default_Assembly	Approved	<Appr.>
Size: A4	Document Name: 04_PowerStage_InputFilter.SchDoc	Rel.	Rev. V1.1
Author: Kofler Chr.			
Date: 04.06.2020 Time: 14:54:12	SVN Revision: 7acd7756352367e48290518fba3		
© Infineon Technologies AG 2019. All Rights Reserved.	Sheet 4 of 5		

05_OutputFilter_HB_Activation.SchDoc

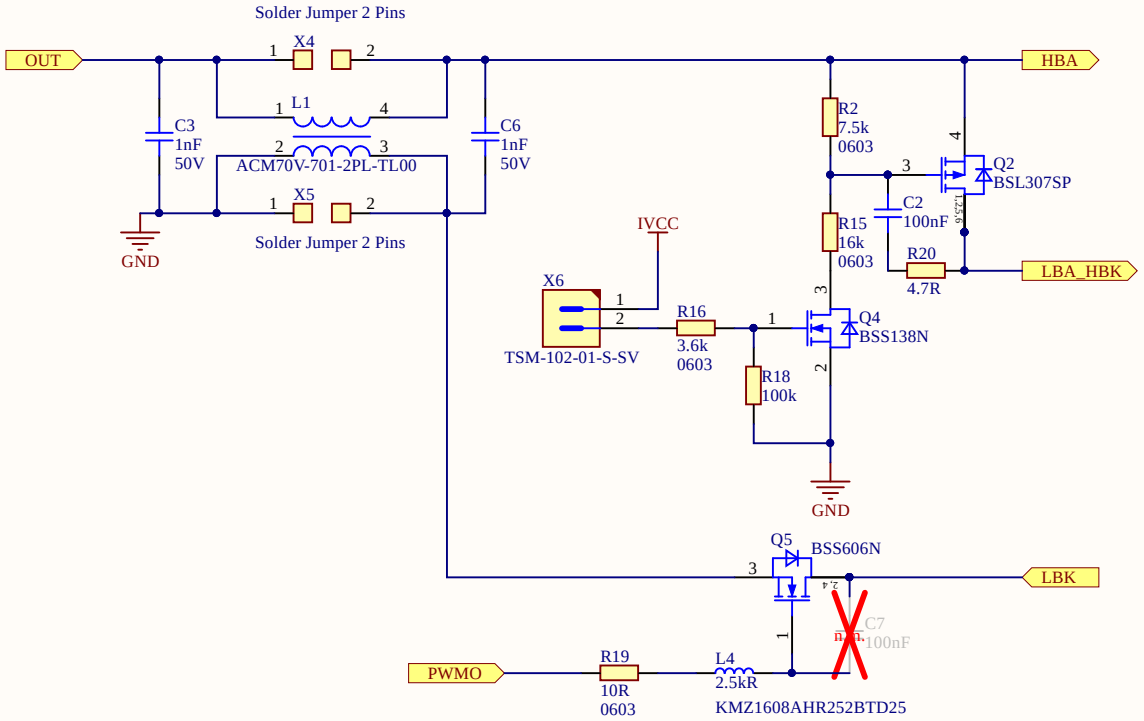

Infineon Technologies AG
IFAT DC ATV BP ASE SE
Siemensstrasse 2, 9500 Villach

Title	LED_Front_HB_LB_Ref		
Variant	Default_Assembly	Approved	<Appr.>
Size: A4	Document Name: 05_OutputFilter_HB_Activation.SchDoc	Rel.	Rev. V1.1

Author: Kofler Chr.
Date: 04.06.2020 Time: 14:54:12 SVN Revision: 7acd7756352367e48290518fba3

© Infineon Technologies AG 2019. All Rights Reserved.

Sheet 5 of 5

Important Notice

The Evaluation Boards and Reference Boards and the information in this document are solely intended to support designers of applications to evaluate the use of products of Infineon Technologies in the intended application.
Environmental conditions have been considered in the design of the Evaluation Boards and Reference Boards provided by Infineon Technologies. The design of the Evaluation Boards and Reference Boards is **tested by** Infineon Technologies only as described in this document. The design is not qualified in terms of safety requirements, manufacturing and operation over the entire operating temperature range or lifetime.
The Evaluation Boards and Reference Boards provided by Infineon Technologies are **subject to functional testing only under typical load conditions**.
Evaluation Boards and Reference Boards are not subject to the same procedures as regular products regarding returned material analysis (RMA), process change notification (PCN) and product discontinuation (PD).
Evaluation Boards and Reference Boards are not commercialized products and are **solely intended to be used for evaluation and testing purposes**. They shall in particular not be used for reliability testing or production. Hence, the Evaluation Boards and Reference Boards may not comply with CE or similar standards (including but not limited to the EMC Directive 2004/EC/108 and the EMC Act) and may not fulfill other requirements of the country in which they are operated by the customer. The customer shall ensure that each Evaluation Boards and Reference Board will be handled in a way which is compliant with all relevant requirements and standards in the country in which they are operated.
The Evaluation Boards and Reference Boards and any information in this document are addressed **only to qualified and skilled technical staff, for laboratory usage,** and shall be used and managed according to the terms and conditions set forth in this document and in any other related documentation provided with the respective Evaluation Boards or Reference Board.
It is the **responsibility of customer's technical departments to evaluate the suitability** of the Evaluation Boards and Reference Boards for the intended application and the completeness and correctness of the information provided in this document with respect to such application.
The customer accepts that the Evaluation Boards and Reference Boards are not intended to be used for life-endangering applications such as medical, nuclear, military, life-critical or other applications, where failure of the Evaluation Boards and Reference Boards or any results from the use thereof can reasonably be expected to result in personal injury.
The Evaluation Boards and Reference Boards and any information in this document is provided "as is" and Infineon Technologies disclaims any and all warranties, express or implied, including but not limited to warranties of non-infringement of third party rights and implied warranties of fitness for any purpose, or for merchantability.
Infineon Technologies shall not be responsible for any damages resulting from the use of the Evaluation Boards and Reference Boards and/or from any information provided in this document. The customer is obliged to defend, indemnify and hold harmless Infineon Technologies from and against any claims or damages arising out of or resulting from any use thereof.
Infineon Technologies reserves the right to change this document and/or any information provided herein at any time without further notice.