XMC1300 Application Card
Low Voltage 15W PMSM Motor Control

inDrive - PMSM_LV15W

[1] Contents
[2] Gate Driver, Power Stage, Shunt Amplifier
[3] CPU Card Interface, Power Supply, Encoder

Fiducials

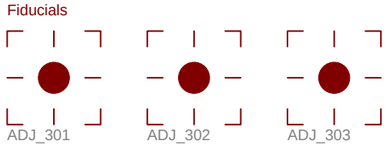

Legal Disclaimer

The information given in this document shall in no event be regarded as a guarantee of conditions or characteristics. With respect to any examples or hints given herein, any typical values stated herein and/or any information regarding the application of the device, Infineon Technologies hereby disclaims any and all warranties and liabilities of any kind, including without limitation, warranties of non-infringement of intellectual property rights of any third party.

2013/16
KIT_XMC1X_C_MOTOR_1
5/6/2013 09:51:03
Sheet: 1/3

GATE DRIVER

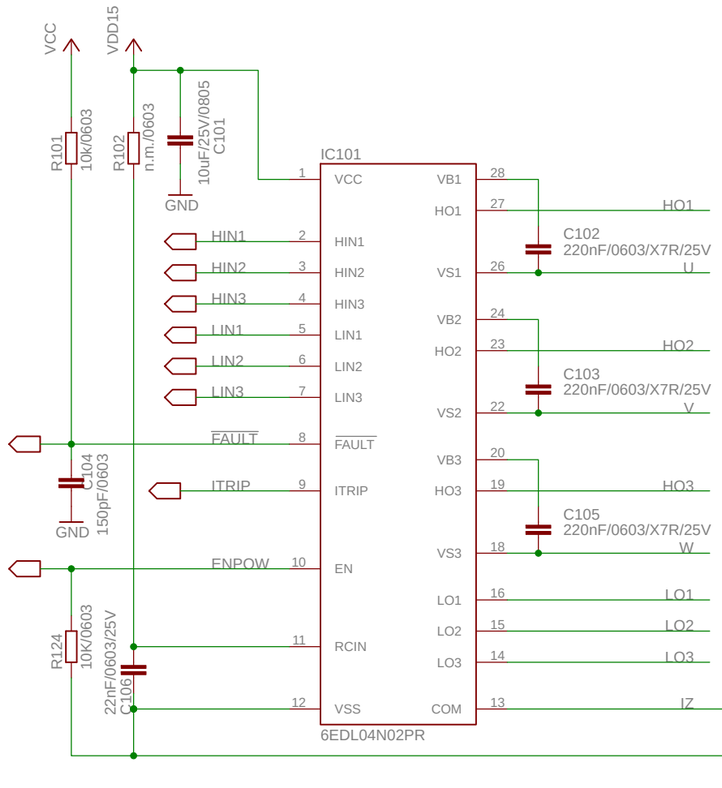

POWER STAGE AND SHUNTS

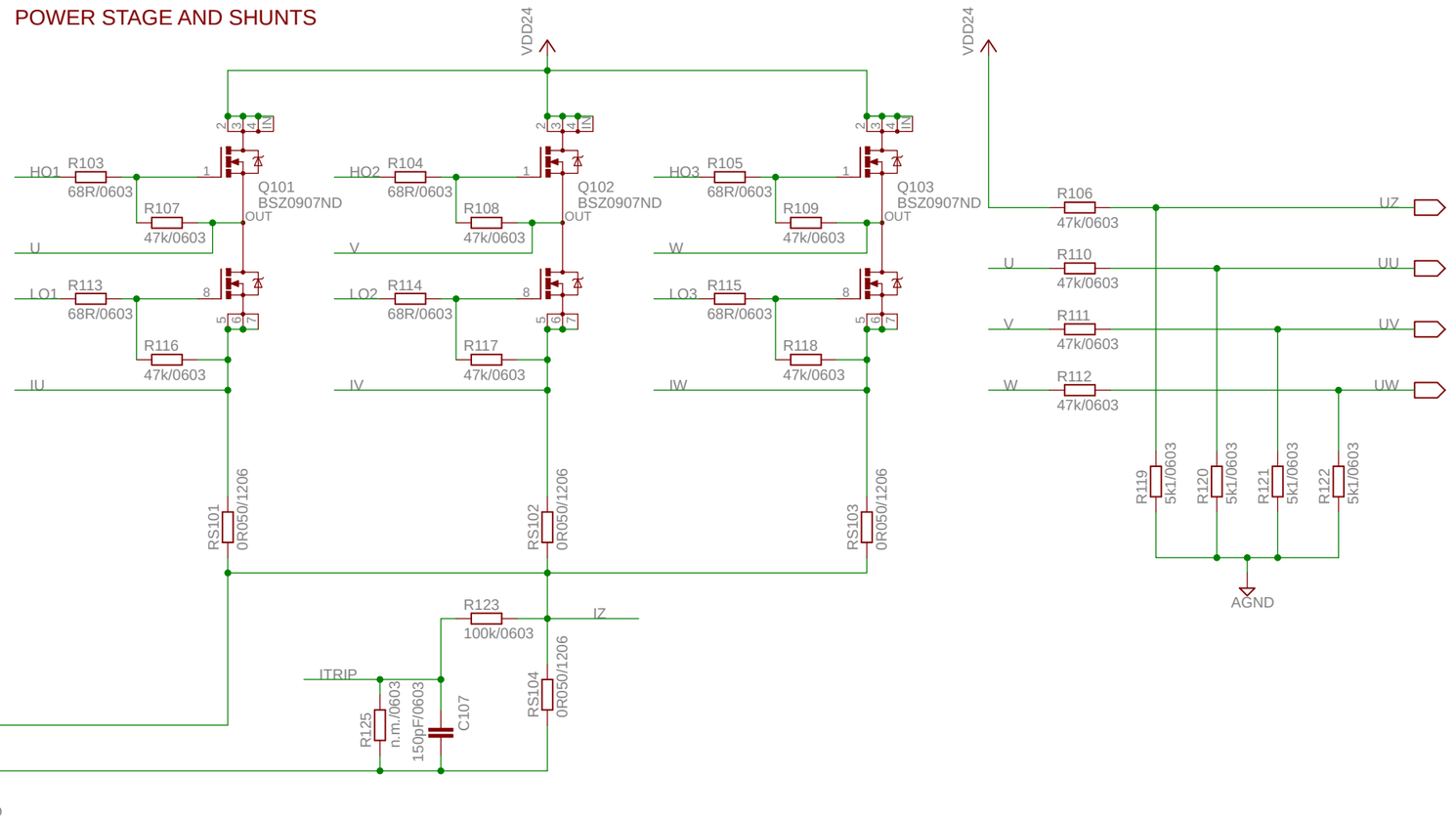

SHUNT AMPLIFIER Offset: VCC/2 Gain: 16.4

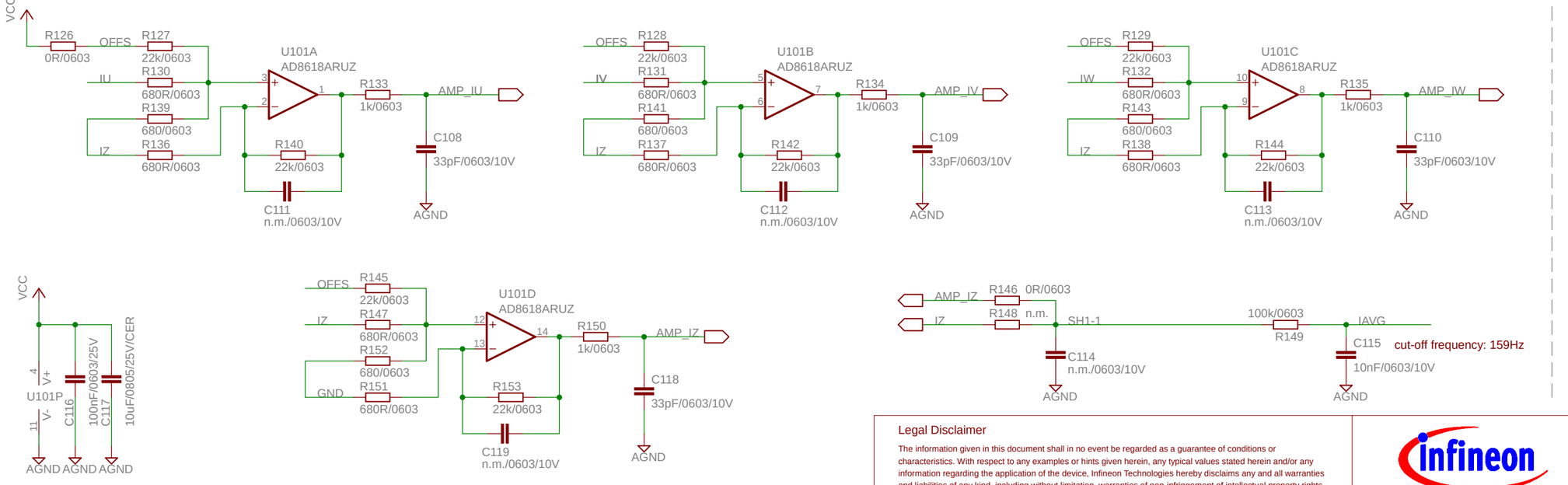

MOTOR

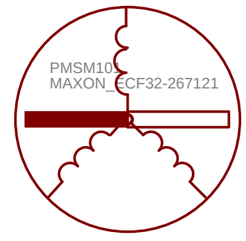

MOTOR CONNECTOR

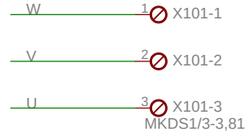

Legal Disclaimer

The information given in this document shall in no event be regarded as a guarantee of conditions or characteristics. With respect to any examples or hints given herein, any typical values stated herein and/or any information regarding the application of the device, Infineon Technologies hereby disclaims any and all warranties and liabilities of any kind, including without limitation, warranties of non-infringement of intellectual property rights of any third party.

KIT_XMC1X_C_MOTOR_1
5/6/2013 09:51:03
Sheet: 2/3

VDD15 POWER SUPPLY (+15V) - MOSFET Driver Supply

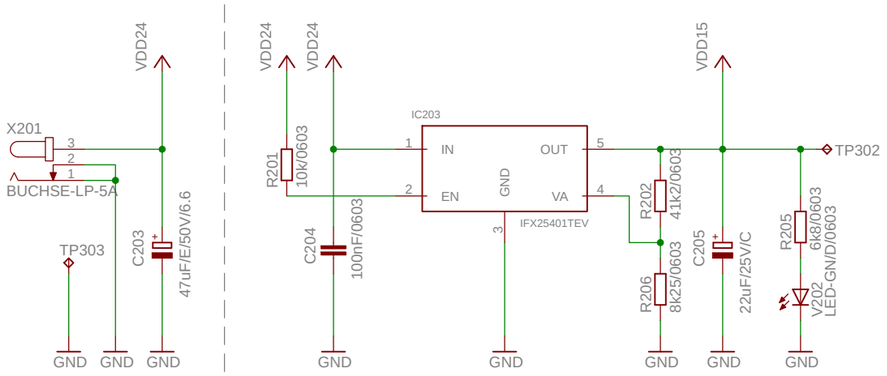

VCC POWER SUPPLY (3.3V or 5.0V) - MCU Supply

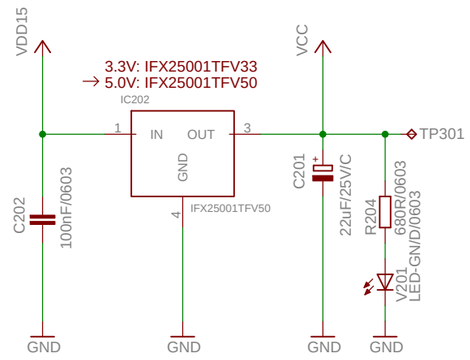

VDD5 POWER SUPPLY (+5V) - HALL Sensor Supply

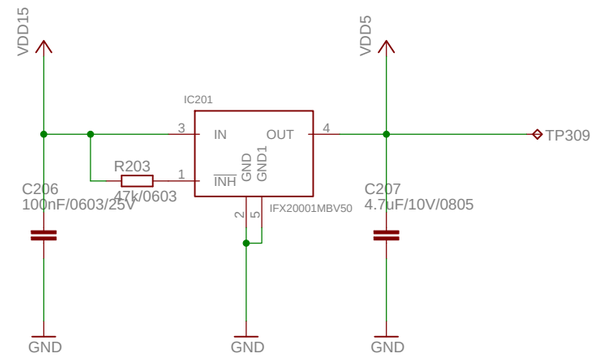

CPU CARD CONNECTOR

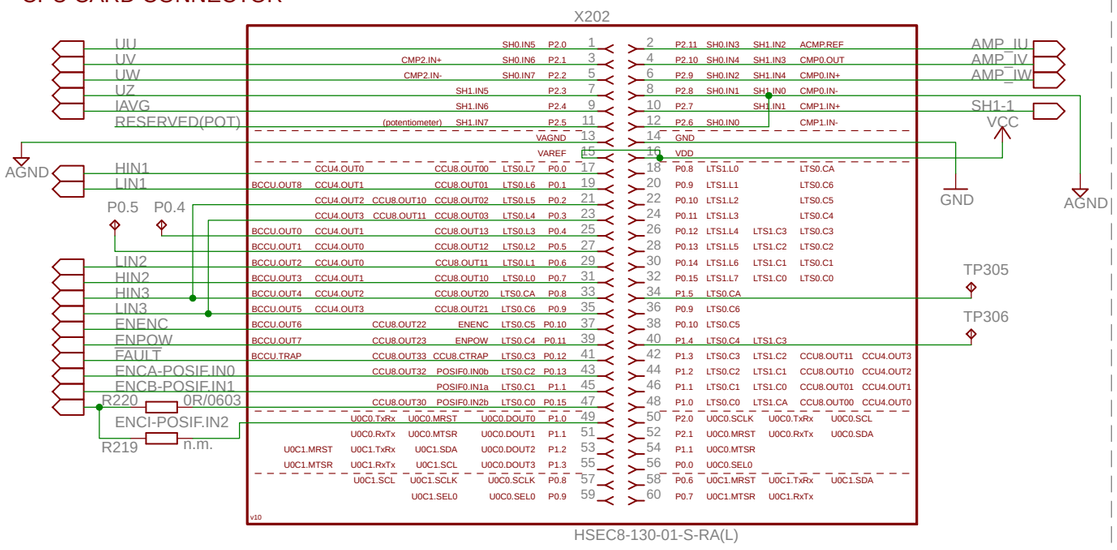

ENCODER LINE DRIVER AND CONNECTOR

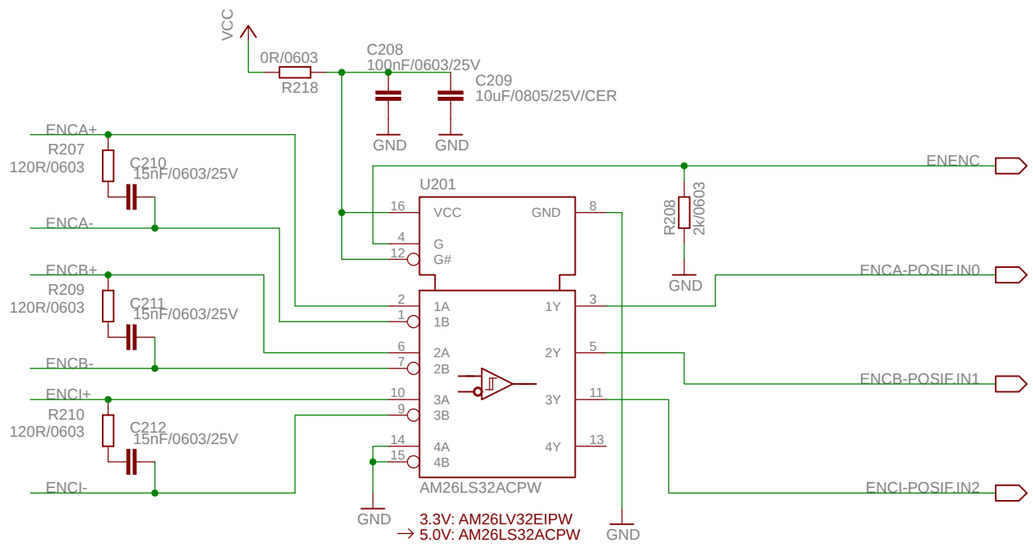

HALL SENSOR CONNECTOR

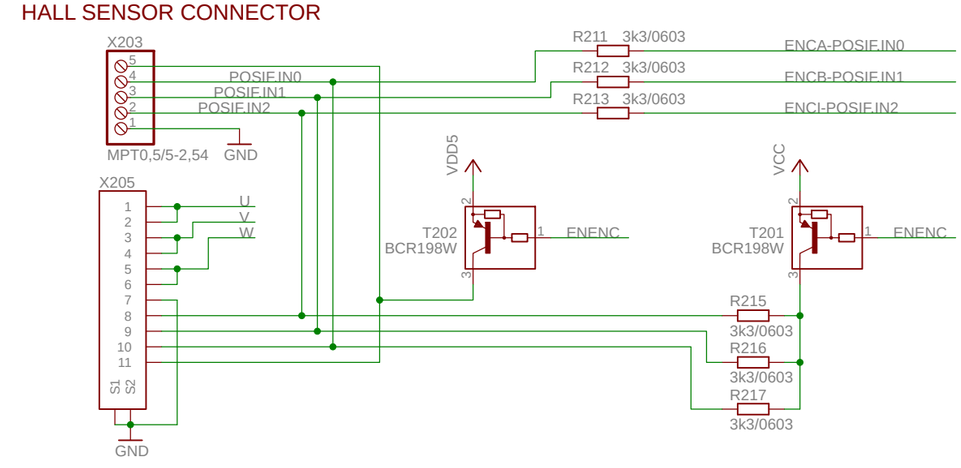

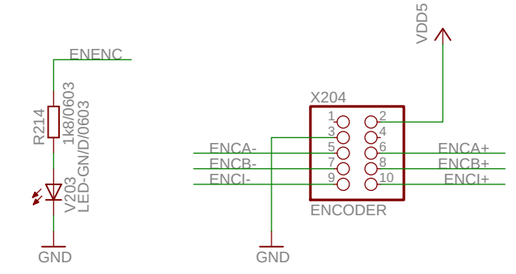

Legal Disclaimer

The information given in this document shall in no event be regarded as a guarantee of conditions or characteristics. With respect to any examples or hints given herein, any typical values stated herein and/or any information regarding the application of the device, Infineon Technologies hereby disclaims any and all warranties and liabilities of any kind, including without limitation, warranties of non-infringement of intellectual property rights of any third party.

KIT_XMC1X_C_MOTOR_1

5/6/2013 09:51:03

Sheet: 3/3