Index

Page	Schematics Page Name
01	Cover Sheet / Revision History
02	Power
03	Interface
04	Loads
05	Additional PCB Footprint
06	
07	
08	
09	
10	

00_Cover.SchDoc

Revision History

Rev.	Rel.	Date	Author	Description	Page(s)

TLF3068x Application Board

TLF30682_V20

V2.0

Infineon Technologies AG

IFAG ATV STD AE

Am Campeon 1-15 - 85579 Neubiberg - Germany

2019

LEGAL DISCLAIMER

THE INFORMATION GIVEN IN THIS DOCUMENT IS GIVEN FOR ILLUSTRATING PURPOSES ONLY. THE RECIPIENT OF THIS DOCUMENT MUST VERIFY ANY FUNCTION DESCRIBED HEREIN IN THE REAL APPLICATION. INFINEON TECHNOLOGIES HEREBY DISCLAIMS ANY AND ALL WARRANTIES AND LIABILITIES OF ANY KIND (INCLUDING WITHOUT LIMITATION WARRANTIES OF NON-INFRINGEMENT OF INTELLECTUAL PROPERTY RIGHTS OF ANY THIRD PARTY) WITH RESPECT TO ANY AND ALL INFORMATION GIVEN IN THIS DOCUMENT.

Infineon Technologies AG
IFAG ATV STD AE
Am Campeon 1-15 - 85579 Neubiberg - Germany

Title	TLF3068x Application Board		
Variant	TLF30682_V20	Approved	<Appr.>
Size: A3	Document Name: 00_Cover.SchDoc	Rel.	Rev. V2.0
Author:			
Date: 20.09.2019 Time: 12:51:30	SVN Revision: 730		

© Infineon Technologies AG 2017. All Rights Reserved.

01_Power.SchDoc

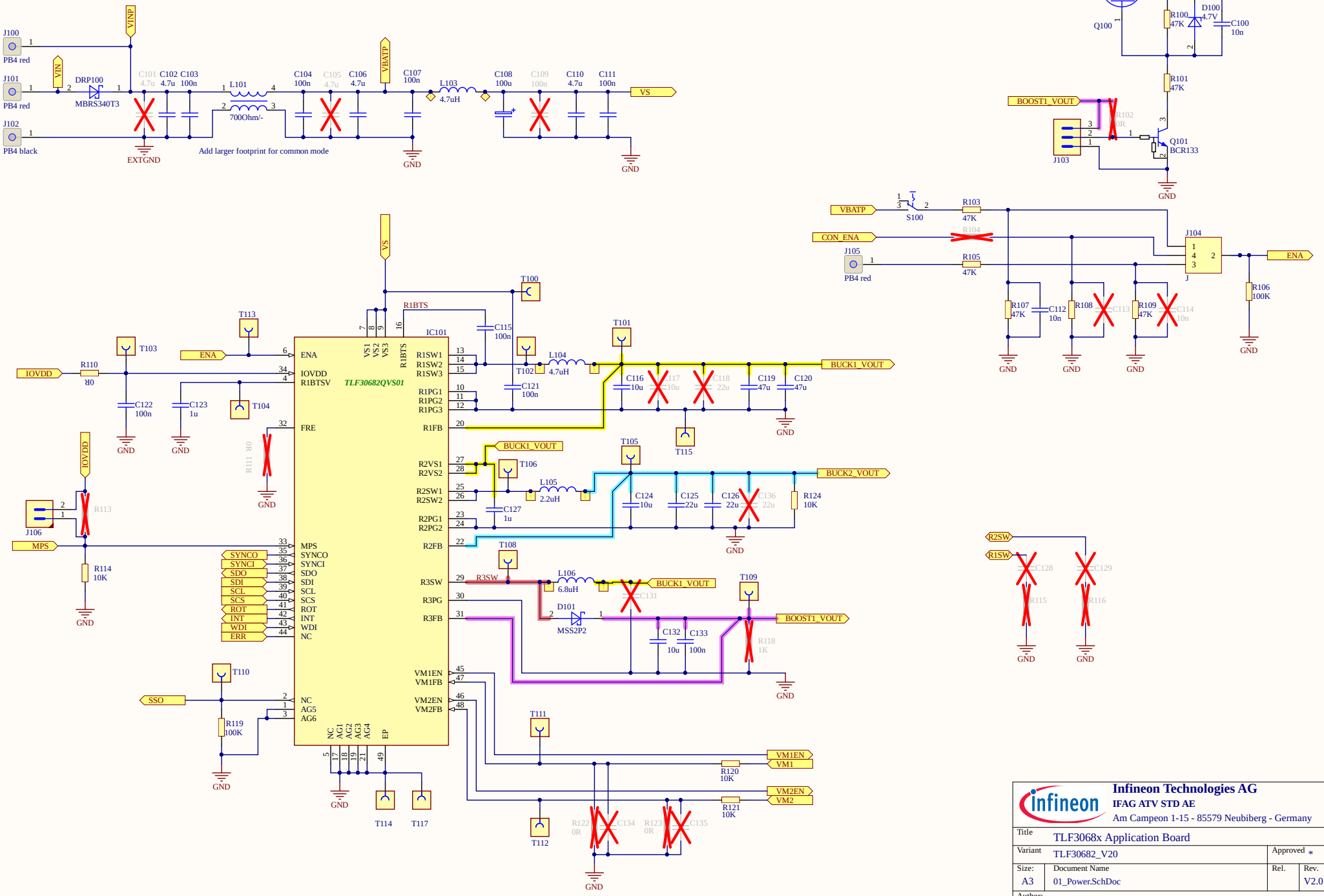

Infineon Technologies AG IFAG ATV STD AE Am Campeon 1-15 - 85579 Neubiberg - Germany			
Title	TLF3068x Application Board		
Variant	TLF30682_V20	Approved	*
Size: A3	Document Name: 01_Power.SchDoc	Rel.	Rev. V2.0
Author:			
Date: 20.09.2019 Time: 12:51:31	SVN Revision: 612		
© Infineon Technologies AG 2017. All Rights Reserved.	Sheet 2 of 2		

02_Interface.SchDoc

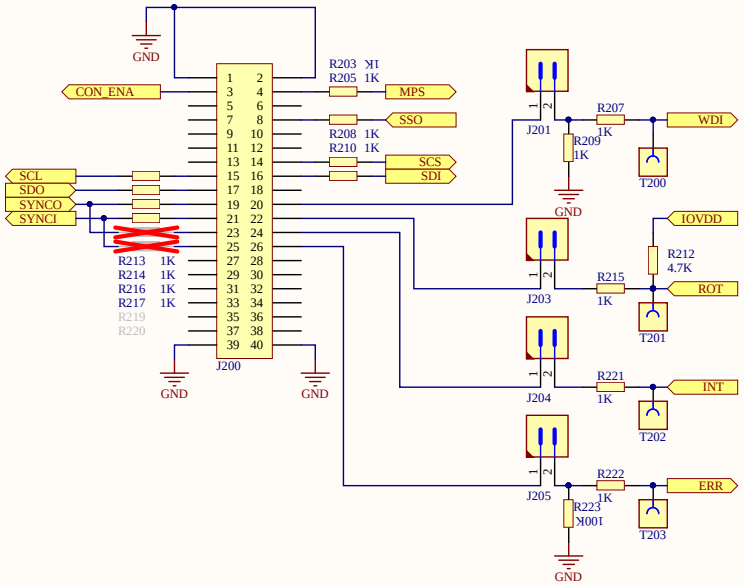

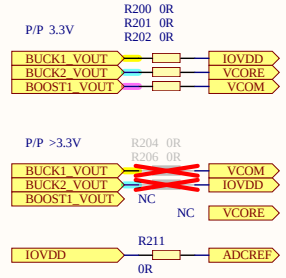

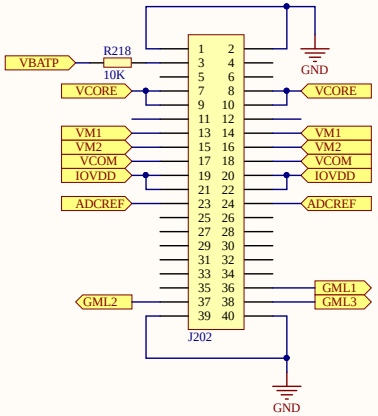

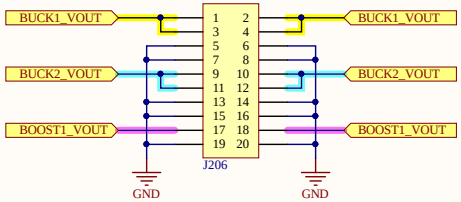

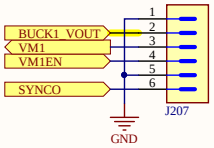

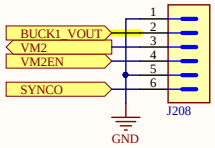

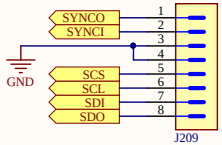

Infineon Technologies AG
IFAG ATV STD AE
Am Campeon 1-15 - 85579 Neubiberg - Germany

Title	TLF3068x Application Board		
Variant	TLF30682_V20	Approved	*
Size: A3	Document Name: 02_Interface.SchDoc	Rel.	Rev. V2.0
Author:			
Date: 20.09.2019 Time: 12:51:32	SVN Revision: 612		

© Infineon Technologies AG 2017. All Rights Reserved.
Sheet 3 of *

03_Loads.SchDoc

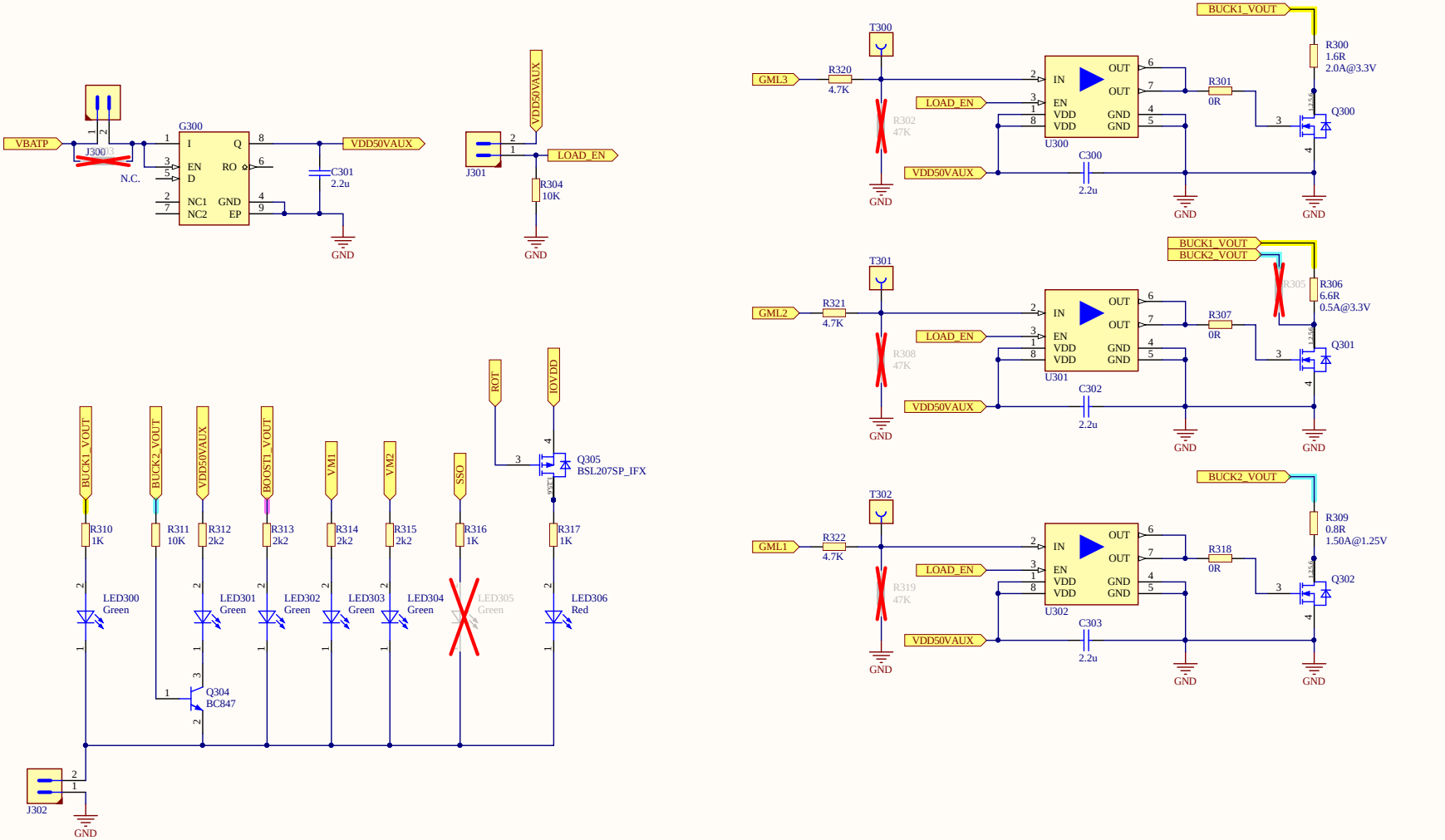

Infineon Technologies AG **IFAG ATV STD AE** Am Campeon 1-15 - 85579 Neubiberg - Germany			
Title	TLF3068x Application Board		
Variant	TLF30682_V20	Approved	*
Size: A3	Document Name: 03_Loads.SchDoc	Rel.	Rev. V2.0
Author:			
Date: 20.09.2019 Time: 12:51:32	SVN Revision: 612		
© Infineon Technologies AG 2017. All Rights Reserved.	Sheet 4 of *		

04_PCBonly.SchDoc

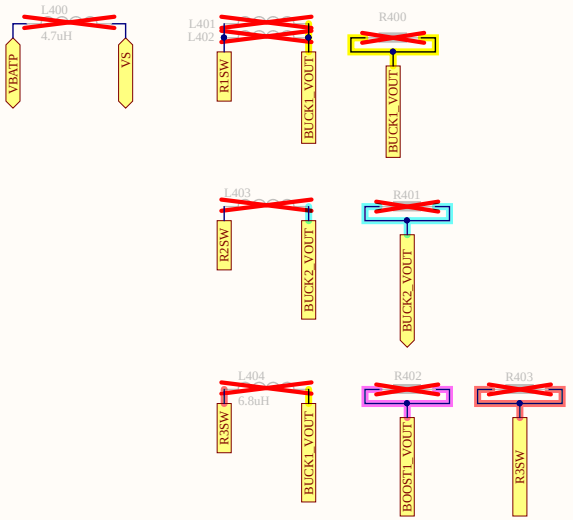

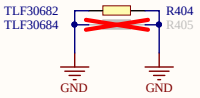

Infineon Technologies AG **IFAG ATV STD AE** Am Campeon 1-15 - 85579 Neubiberg - Germany			
Title	TLF3068x Application Board		
Variant	TLF30682_V20	Approved	*
Size: A3	Document Name: 04_PCBonly.SchDoc	Rel.	Rev. V2.0
Author:			
Date: 20.09.2019 Time: 12:51:33	SVN Revision: 607		
© Infineon Technologies AG 2017. All Rights Reserved.	Sheet 5 of *		

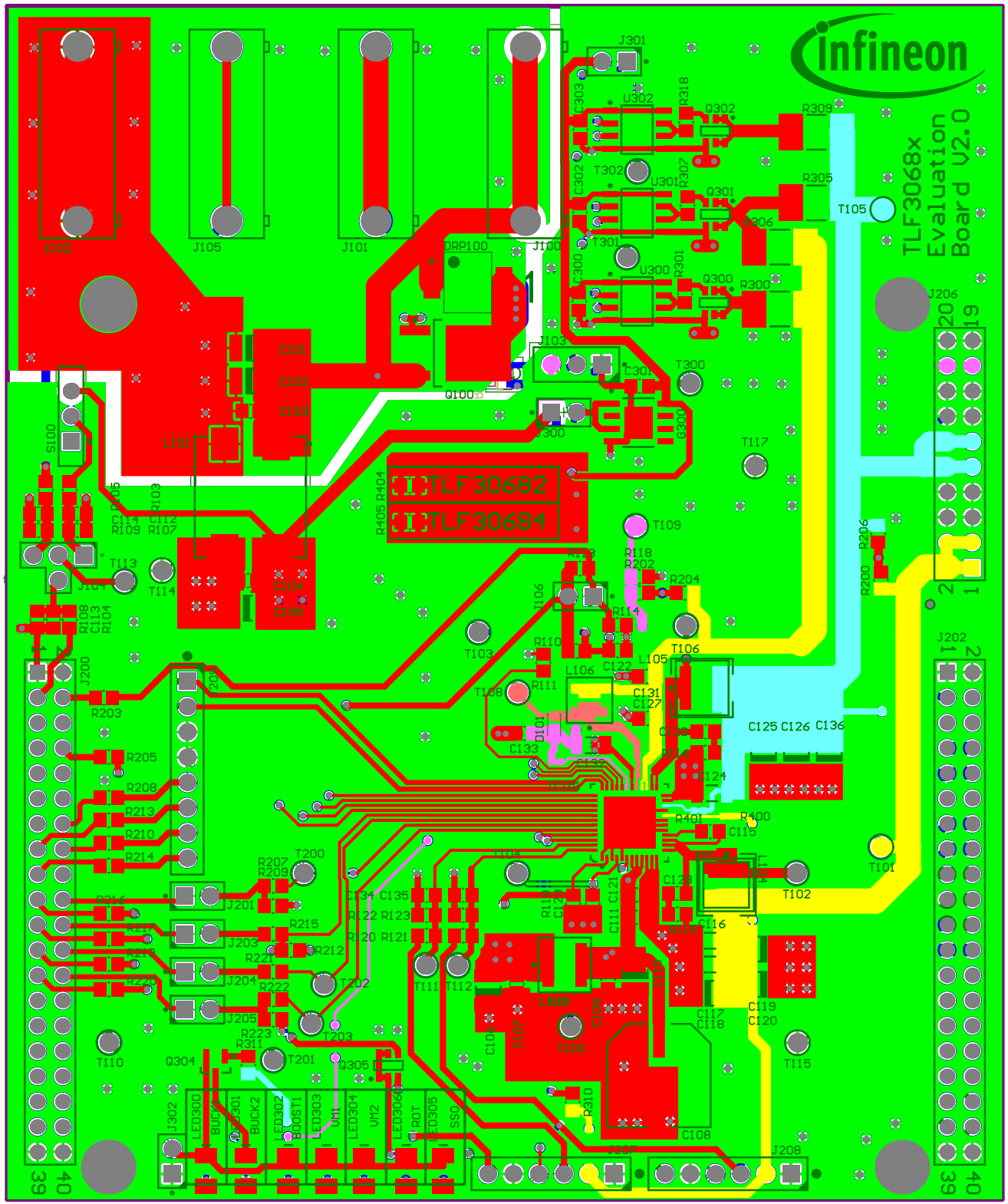
infineon
TLF3068x
Evaluation
Board V2.0
TLF30682
TLF30684

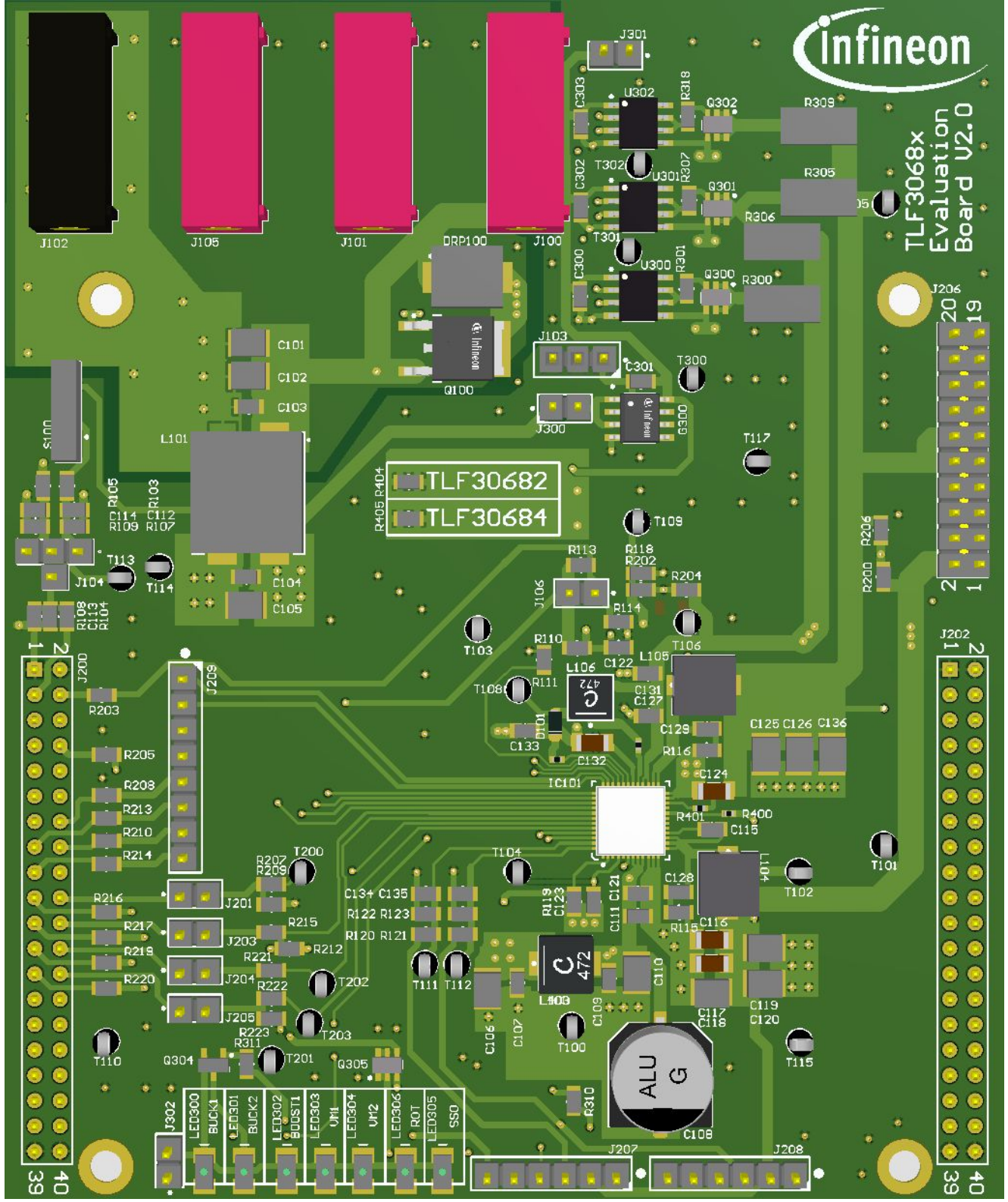
infineon
TLF3068x
Evaluation
Board V2.0
TLF30682
TLF30684
J102
J105
J101
J100
DRP100
Q100
J103
J300
J301
U302
U301
U300
Q302
Q301
Q300
R309
R305
R306
R300
T302
T301
T300
T117
T109
T106
T103
T108
T104
T101
T102
T200
T201
T202
T203
T110
T111
T112
T100
T115
T113
T114
J104
J106
J200
J202
J206
J207
J208
J209
J201
J203
J204
J205
J302
L101
L104
L105
L106
L103
IC101
ALU
G
LED300
BUCK1
LED301
BUCK2
LED302
BOOST1
LED303
VM1
LED304
VM2
LED306
ROT
LED305
SSO

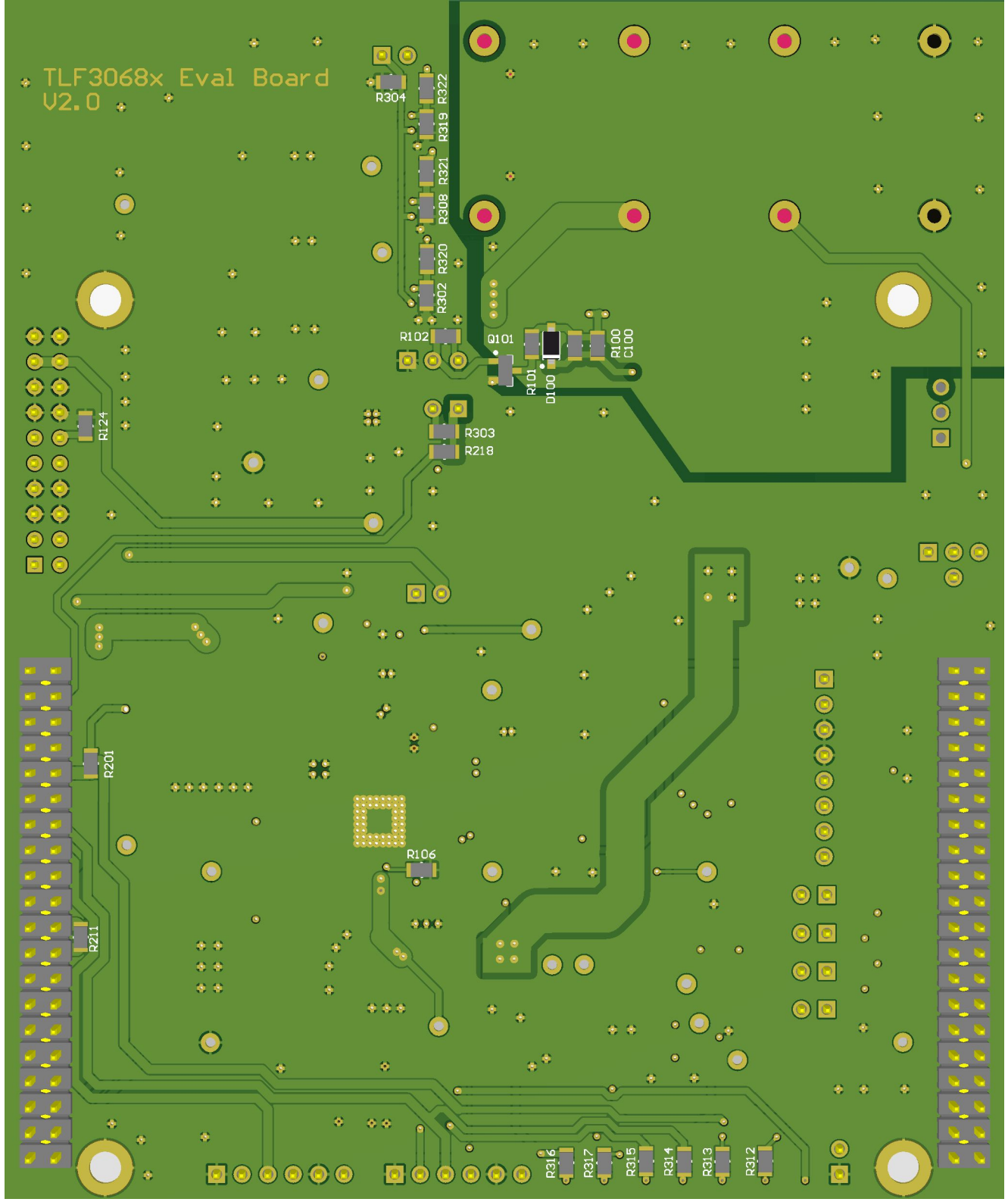
TLF3068x Eval Board
V2.0
R304
R322
R319
R321
R308
R320
R302
R102
Q101
R100
C100
R101
D100
R124
R303
R218
R201
R106
R211
R316
R317
R315
R314
R313
R312