02-TLD7002-16GWAY_DEMO_S02_LINEAR_MCLD_Control_Stage.SchDoc

TLD7002-16 GATEWAY SECTION

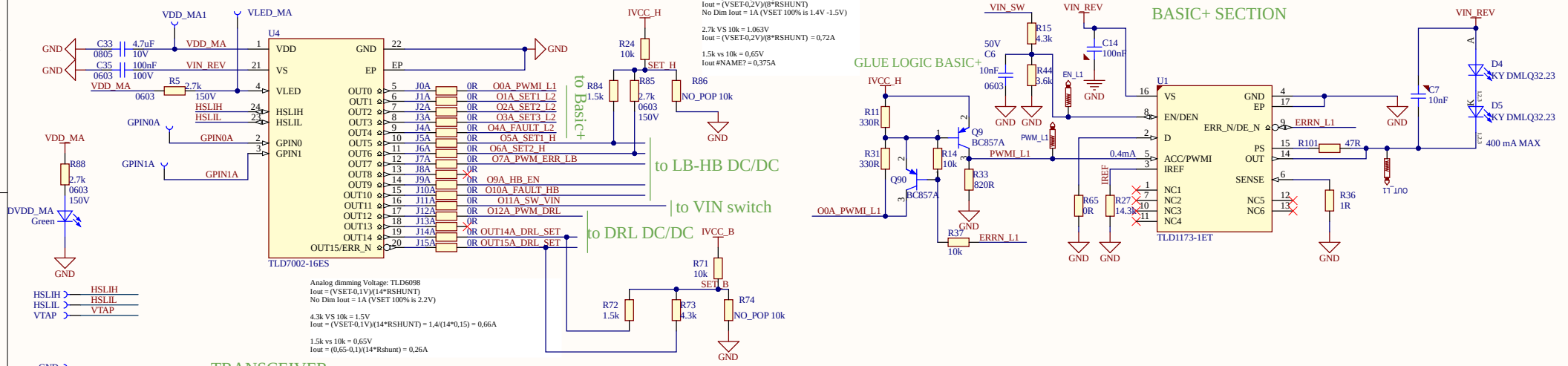

BASIC+ SECTION

TRANSCEIVER

Eventually use IFX LDO 5V TLS202B1V50

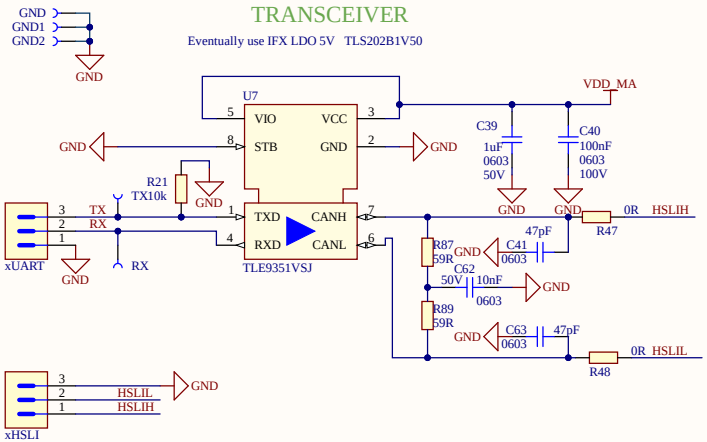

BASIC+ SECTION

RED LED P.N. LS E6SF-V2BA-1-1-Z

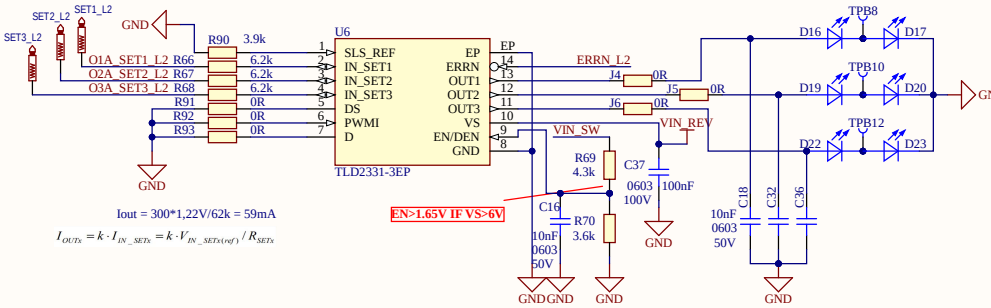

TLD7002-16ES WIPING INDICATOR SECTION

LED forward voltage
2.05V to 2,65V @50mA
25°

LED LY E63F-EAFA-46-1-Z

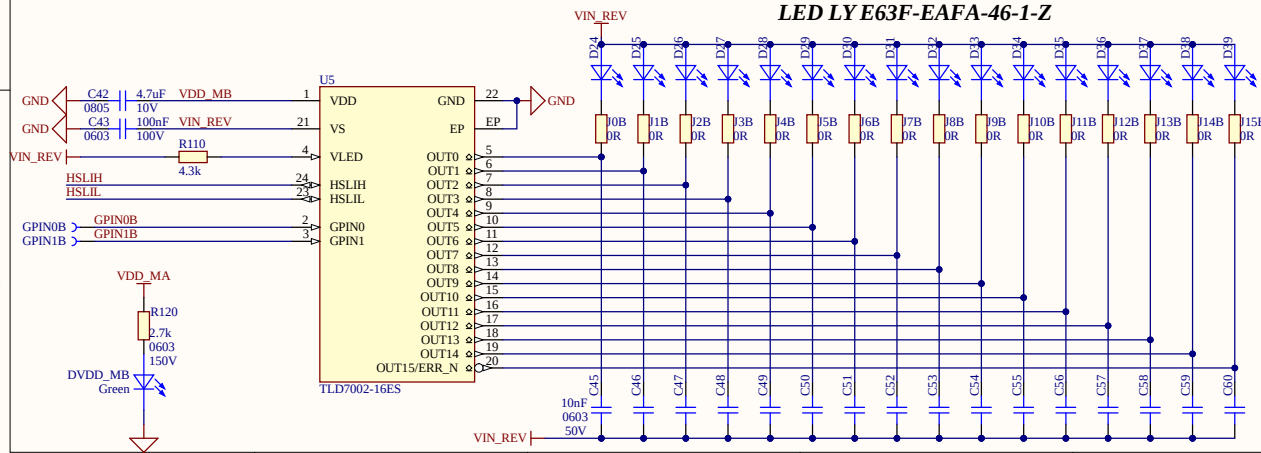

GLUE LOGIC BASIC+

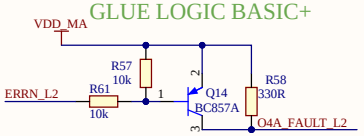

An error on the basic+ will produce a VFWD_WRN on OUT04 (VFWD_WRN threshol set to 1,25V in the OTP)

Public

Infineon Technologies Italia s.r.l.
via Niccolò Tommaseo 65/B
Padova, Italy

Title	TLD7002-16GWAY_DEMO_S02_P02		
Variant	[No Variations]	Approved	<Appr.>
Size: A3	Document Name: 02-TLD7002-16GWAY_DEMO_S02_LINEAR_MCLD_Control_Stage.SchDoc	Rel.	Rev.
Author: FF			
Date: 05/04/2024 Time: 15:25:31	SVN Revision: Not in version control		
		Sheet	of

03-TLD7002-16GWAY_DEMO_S02_DCDC_Control_Stage.SchDoc

