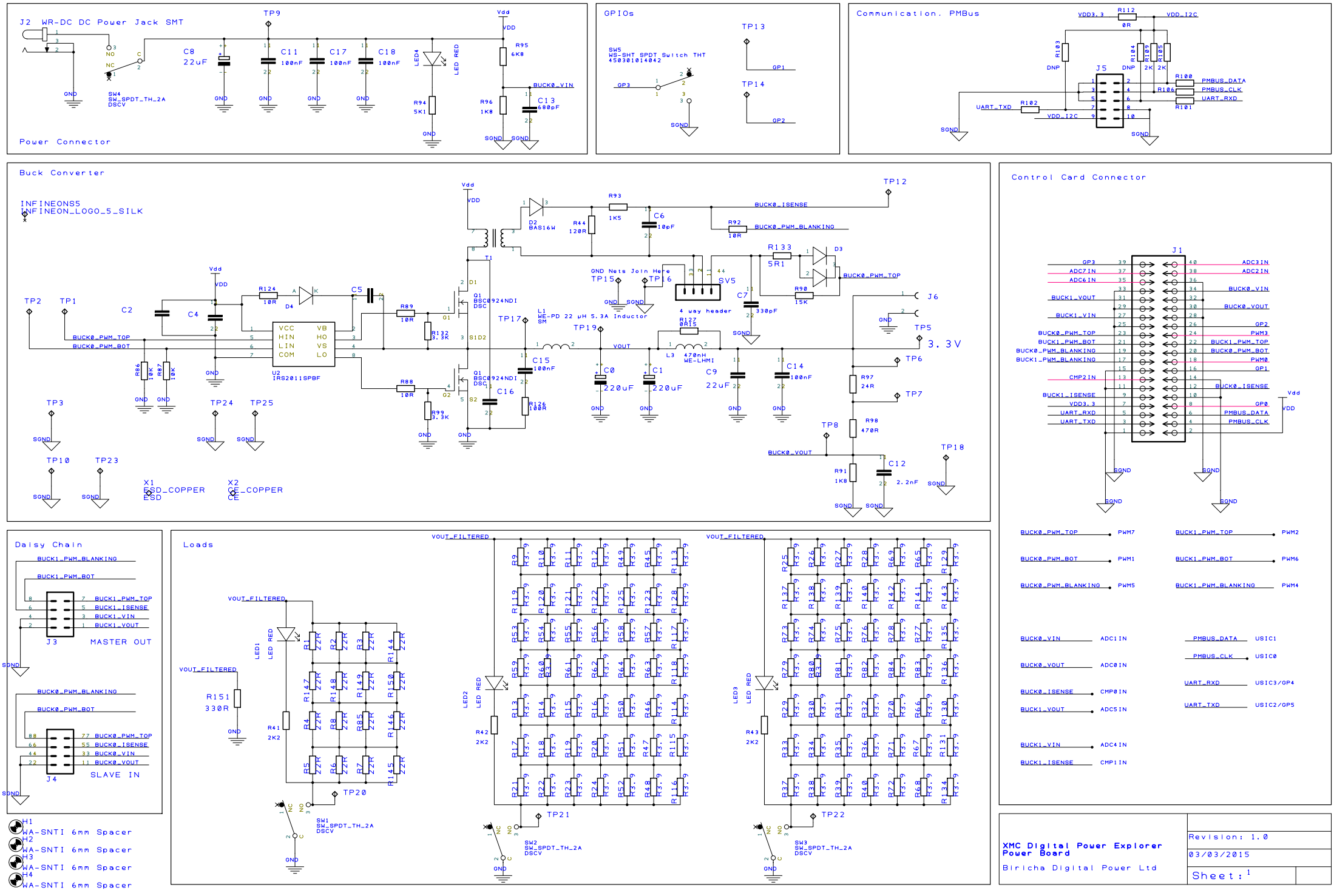
J2 WR-DC DC Power Jack SMT
Power Connector
SW4 SW_SPDT_TH_2A DSCV
GPIOs
SW5 WS-SHT SPDT Switch THT 450301014042
TP13
GP1
TP14
GP2
Communication, PMBus
J5
PMBUS_DATA
PMBUS_CLK
UART_RXD
UART_TXD
Buck Converter
INFINEONS5
INFINEON_LOGO_5_SILK
U2 IRS2011SPBF
L1 WE-PD 22 uH 5.3A Inductor SM
L3 470nH WE-LHMI
4 way header
3.3V
X1 ESD_COPPER ESD
X2 CE_COPPER CE
Control Card Connector
J1
Daisy Chain
J3 MASTER OUT
J4 SLAVE IN
Loads
SW1 SW_SPDT_TH_2A DSCV
SW2 SW_SPDT_TH_2A DSCV
SW3 SW_SPDT_TH_2A DSCV
H1 WA-SNTI 6mm Spacer
H2 WA-SNTI 6mm Spacer
H3 WA-SNTI 6mm Spacer
H4 WA-SNTI 6mm Spacer
XMC Digital Power Explorer Power Board
Biricha Digital Power Ltd
Revision: 1.0
03/03/2015
Sheet: 1